HINGES
& Hardware

FOR INDUSTRIAL APPLICATIONS

PINET®

Discover the new PINET website

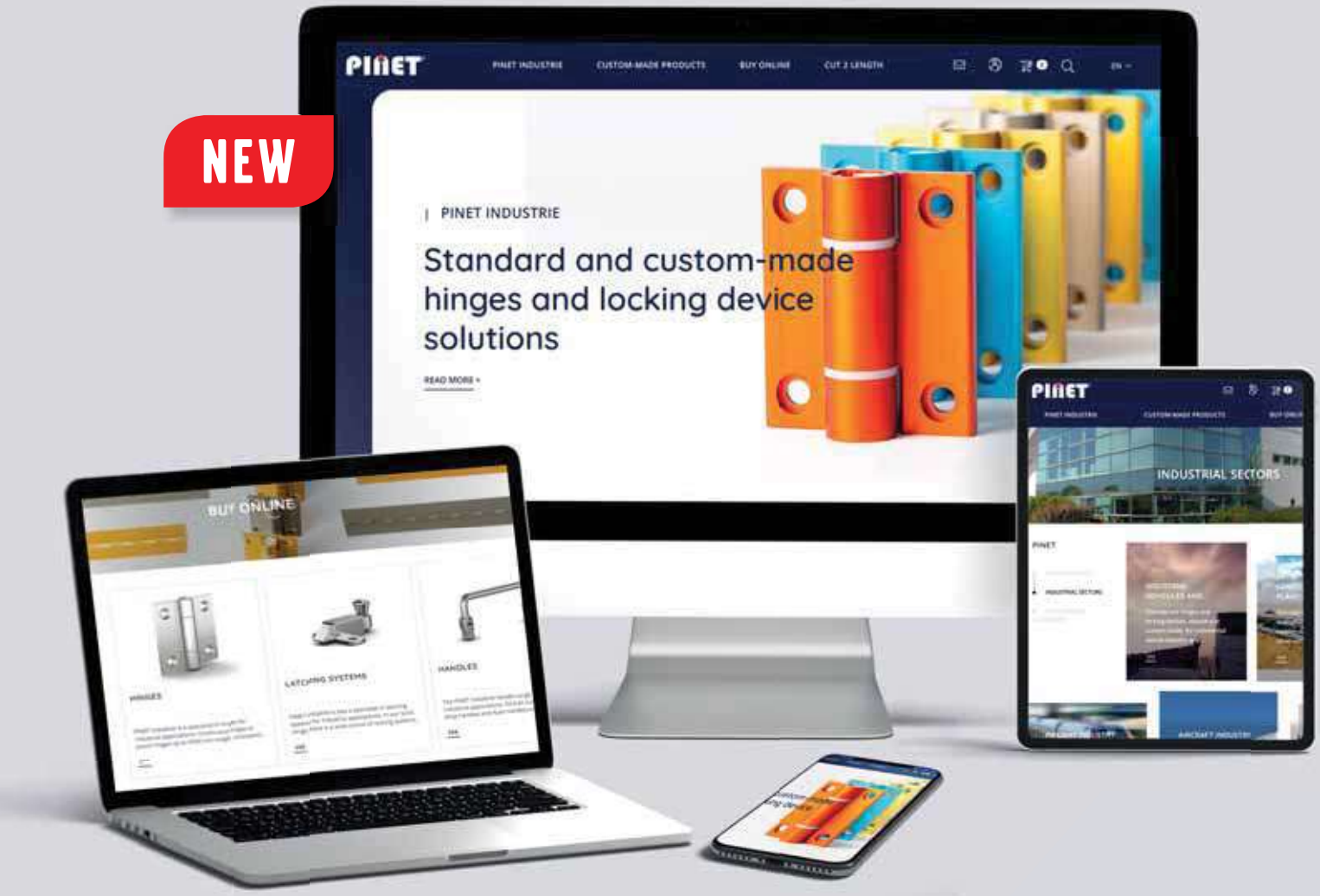

SIMPLIFIED SEARCH

Filters by functions, material and length.

ADVICE TOOLS

A tool for selecting continuous hinges based on the dimensions and mass of your door.

Possibility to create your own made-to-measure continuous hinge.

DETAILED INFORMATION

Clear product pages and associated visuals.
Ability to download CAD files.

www.pinet-industrie.com/en

CONTENT

PINET company 3

Guidelines 16

Hinges 19

Latching Systems 221

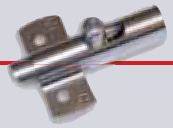

Handles 325

Accessories 357

Stainless steel range 379

Aluminium range 535

Index 573

Icons for product selection

RoHS icon:

Complies with the RoHS directive

Materials icons:

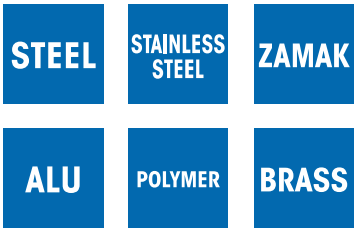

Product materials

Spring hinge working direction icons:

Spring hinge closing

Spring hinge opening

Opening angle icons:

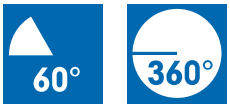

Opening angle of hinge

Lift-off hinge icon:

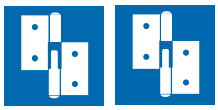

Lift-off hinge

Loose-pin butt hinge icon:

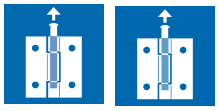

Loose-pin butt hinge

IP waterproofing icon:

IP65 protection

Stock Information:

Product not stored - deadline on request

All the solutions

for hinges and locks for industrial applications.

PINET is among the leading european manufacturers of industrial hinges, locks and hardware for industrial applications.

For 6 generations, PINET has been investing in processes that allows us to manufacture more than 2,000 standard catalogue items and achieve 50% of its production with specially adapted solutions for its clients. In order to respond to the demands of its clients in terms of quality, lead times and cost, PINET has placed a continued progress approach at the heart of its values, together with a priority for innovation, investment, team, involvement and competency.

Milestones that have marked more than 180 years of PINET experience

1840
Creation of the Estève workshop.

1886
The Estève workshop takes the name of Maison Pinet.

1921
Diversification of the activity and manufacturing of the first hinges, still in Paris.

1996
Construction of amanufacturing factory in Chaulnes in Picardy.

2009
Construction of a distribution centre next to the production factory. Real expertise in many different industries.

2012
Creation of an industrial site in Tunisia.
Opening of an online store for sales in France and Europe of all of the standard products in the PINET catalogue.

2019
Integration into the Estève et Compagnie group whose name is a tribute to the founder.

2022
Estève et Compagnie acquires BOSCH SCHARNIEREN, a Dutch company specializing in the manufacture and sale of small series hinges for industrial applications.

BOSCH HINGES

Real expertise in many different industries

- construction vehicles
- agricultural machinery
- commercial vehicles
- railway equipment
- electrical cabinets, terminals, lockers
- medical equipment
- aeronautics
- mechanical construction
- HVAC
- special machinery
- street furniture, street lighting, road signs…

The answers

to all of your hinge and lock needs.

Investing in modern processes and technologies, Pinet manufactures more than 2,000 models of hinges and locks, both standard and custom-made.

Custom-made

To best serve your projects, the custom-made activity is designed in two ways:

To follow your drawings

Based on your elements, our design office is here to help you carry out your projects actively and at the best price. Supported by its unique expertise, particularly in the creation of products with a heavy gauge, the design office provides advice for you to be able to optimise your drawings to achieve your functional goals in line with your target price.

To follow your brief

Based on your needs, our design office offers you the best adapted solution to your technical and cost constraints.

Standard

The 2,000 products grouped together in this catalogue are immediately available and offered in a large number of sizes and materials. The logistics of this complete range are managed by a team and special software (WMS) for optimised reactivity.

Hinge

Lid stay

Slam latch

PINET Know-How

a recognised expertise associated with cutting-edge technology.

- A manufacturing tool including machines that enable the automated production of hinges at competitive prices.
- Ability to work metal to a thickness of up to 6 mm making it possible to manufacture parts that can bear heavy loads.
- Ability to produce small and large batches.
- CAD workstation allowing for collaborative designs.
- Integrated equipment workshop for good reactivity.
- Extensive client portfolio including international companies.
- Integrated test laboratory to validate product performance according to the client brief.

Certification

PINET, committed very early to a quality based approach, has been ISO 9001 certified since 1992.

PINET chooses AFAQ/AFNOR as a certification body known for its solid reputation.

The PINET ISO 9001 certification is the guarantee of:
- consistent manufacturing quality
- the respect of manufacturing deadlines.
- optimised product design.

The key to success is called the search for excellence.

afaq ISO 9001 Qualité AFNOR CERTIFICATION

Digital solutions at your service

A new website with many tools.

Our website has been completely revised in 2022 to make it easier for you to order online and allow you to:

- Obtain **detailed information** on all our catalogue products,
- choose your products more easily through a system of **high-performance filters**,
- find the continuous hinge that best fits your application with our **coutinuous hinge selection tool**,
- have access to our product **CAD files** to integrate them into your applications.

Products in stock at the time of ordering are shipped within 24 hours (excluding weekends and holidays). No minimum order is required, and it is possible to place your order 24/7. On visiting our website, you will find up to date news and details of new products launches – for more information please visit.

www.pinet-industrie.com/en

Our news on social networks.

PINET Industrie has chosen **YouTube** to provide you with many videos: product presentations, technical and cinematic explanations and visualisation of production tools.

PINET Industrie is also present on **LinkedIn** to keep you informed of our company's news.

Would you like to be updated regarding our news?

Follow us on LinkedIn or subscribe to the newsletter on our website.

A site dedicated to cutting continuous hinges to your measurements.

To allow you to quickly obtain continuous hinges that have been cut, punched and milled to order, we have developed and recently launched this industry leading Cut2length tool. A wide choice of long hinges made of steel, aluminium or stainless steel can be cut to your measurements.

An intermediate tailor-made solution that allows the shipment of hinges within 48/72h.

https://cut2length.pinet-industrie.com/en

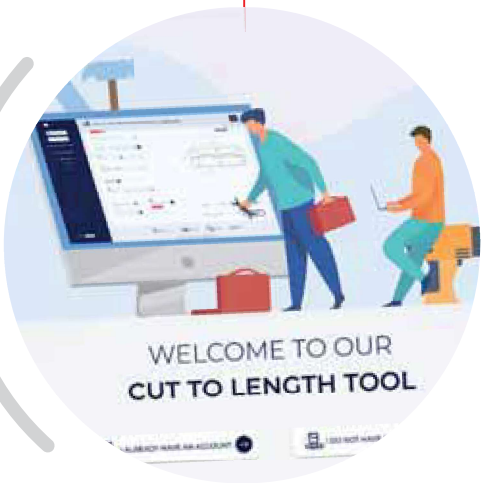

Global support solutions

Taking action on climate challenges.

Since 2015, the «National Low Carbon Strategy» (SNBC), or «National Low Carbon Development Strategy», aims to reduce greenhouse gas emissions. PINET can help you in the implementation of a low-carbon policy.

▶ Here are some of the actions we are looking at:

- Inform of the recyclability rate of the materials committed,
- Manufacturing from carbon-free energy,
- Setting up a carbon offset system…

If you want to adopt an eco-responsible approach and you are looking for solutions to trigger a low-carbon transition, we can support you, so please do not hesitate to contact us!

2 specific design offices, composed of engineers and technicians, can work with you to create your custom-made products.

Looking beyond the products available in our catalogue, we can design custom-made parts from your design and if required, modify and offer improvements from your specifications and requirements.

Our Product Design Office studies the design on all enquiries of hinges and custom locks whilst considering your needs, technical, functional and financial constraints.

Our Manufacturing Design Office designs the tools and equipment necessary for the manufacturing of your hinges and locks.

Our goal is simple… we want to become your trusted partner and offer the best possible service whilst adding value to your design; THE solution that will integrate seamlessly with your application.

For the design offices

A large choice of tools making it possible to select the best solution for each creation.

- 2D and 3D CAO files can be downloaded on the Pinet website.
- Online catalogue to make the choice of products easier.
- Possibility to modify catalogue products to adapt to each project.
- Product design based on a client brief (half of the products manufactured by Pinet are products that are not part of the catalogue).

From a quick prototype to a prototype manufactured in our factory

Collaborative design: The 100% custom-made PINET approach

The PINET design office makes it possible to offer competitive and exclusive solutions based on client brief.

Our aim is to work in conjuction with the client to create the best possible design.

The PINET design office is equipped with 3D CAD stations and a 3D printer.

The client advantages: all this equipment makes it possible to reduce the product development cycles and to rapidly launch innovative products on the market.

All types of client specifications are taken into consideration to respond to the demands of the market:

Reliability
Modularity
Adaptation to the environment where product is used
Adaptation to industrial standards
Specific functions:
water resistance, surface treatments...
Aesthetics (colour, shape...)
Ease of assembly

3 production sites

1 factory in Picardy (France)
1 factory in the Netherlands
1 factory in Tunisia.

Machinery made up of:

- 40 automatic or manually operated presses (up to 420 T)
- 6 CNC machining centers
- 1 robotic cell for machining hinges
- 1 robotic cell for welding
- 2 machines specifically designed for the manufacturing of hinges
- 2 CNC laser cutting machines
- 1 tooling worshop with CNC machining center and EDM wire machines
- 2 electric welders
- 3 folding machines (CNC).

The whole organized in specialised islands to optimize the production flow at the service of the customer, a Lean approach as part of a PEP'S (Pinet Excellence Production System) project.

1 storage centre

Built in 2009 next to the factory, this site covers 4.500 m².
This facility uses the latest stock management technologies improving customer satisfaction through better quality service.

Supply chain optimisation with the integration of the following features:

- integration with the ERP (Sage Adonix)
- installation of a WMS (Warhouse Management System)
- validation of stock movements via the WIFI system
- use of automated storage carousels
- flow optimisation in the warehouse.

A strong international presence

In a context of global economy, PINET has developed its presence in Europe and set up a network of strong partners to operate on a global scale and be closer to its customers.

Our strong network supported by efficient logistic services allow us to meet all delivery deadlines of our customers regardless of their geographical location.

Our manufacturing assets, located in France and in Tunisia, both follow our high-quality standards to ensure a production of high performance and durable products.

Solutions for the construction industry and agricultural machinery

PINET proposes a variety of solutions, as much for standard products as for products that are adapted or specifcally created for those applications.

PINET products can be found on the bodywork and the chassis and also in the cabins of public works machines or agricultural machines.

PINET does not only offer metal products but also solutions combining plastic and metal. The combination of several materials enables the production of robust, inexpensive and aesthetic products.

PRODUCT EXAMPLES

▶ **Bodywork**
- Continuous, cranked hinge for engine cover of excavator
- Hinge for tool / storage box
- Compression latch for hoods
- Support stay with stop for footboard

▶ **Cabin**
- Hinge for door cab of backhoe
- Hinge for lateral door cab of tractor
- High performance bolt for positioning of the driver seat
- Concealed hinge for storage cabinets

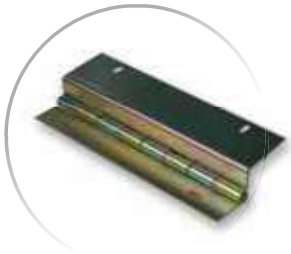

Continuous cranked hinge for engine cover

Hinge for door cab

Latch for hood

Hinge for lateral door cab of tractor

Support stay for footboard

Solutions for the commercial vehicle industry and bodywork sectors

The demands of this industry are varied and the solutions proposed by PINET can either be standard catalogue parts or specifically designed parts.

PINET products can be found in a variety of applications ranging from refrigeration vehicles to light trailers, coaches, and the fitting-out of special vehicles...

PRODUCT EXAMPLES

- **Trucks**
  - Continuous hinge for lateral doors of refrigerated vehicles
  - Continuous hinge for multi-functional vehicles
  - Hinge for tool / storage box
  - Hinge for bunk in a lorry cab
- **Special vehicles**
  - Concealed hinge for vertical doors
  - Detent hinge for monitor positioning
- **Buses / Coaches**
  - Hinge for luggage compartments
  - Hinge for technical hoods
  - Spring hinge for toilet doors of bus

Continous hinge for cab doors

Hinge for storage box

Continous hinge

Hinge for bunk in a lorry cab

Spring loaded concealed hinge for overhead compartment

Solutions for electrical enclosures lockers and metal furniture industry

The lids of boxes or doors of lockers can be fitted or inserted, the mobile joints can be visible or invisible… so many configurations leading to different mobile joints which respond to the particular application.

Lockers which are also water or dust resistant are a common demand in this field which necessitates adapted solutions.

PRODUCT EXAMPLES

▶ **Metal lockers**

- 180° concealed hinge
- Concealed pin-hinge opening to 120°
- Plastic hinge for flush doors
- Screw-on hinge for protruding doors
- Friction hinge for maintaining doors in an open position
- Continuous hinge cut to length for hatch articulation

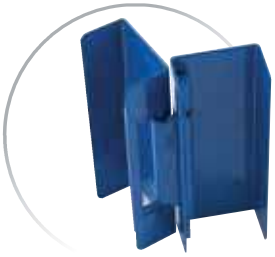

Concealed hinge opening 180° for flush doors

Magnetic catch

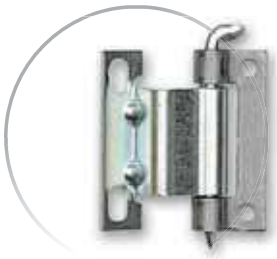

Concealed hinge

Spring hinge

Solutions for rail industry

The demands of locking and mobile joints are numerous in this industry. The products must predominantly be made from stainless steel and they are often specifically developed for each project.

PRODUCT EXAMPLES

- **Exterior applications**
  - Robust hinge for train aprons
  - Lid stay to keep hatches in an open
- **Interior applications**
  - Locking with tool operated key
  - Mobile joint for underground seats
  - Mobile joint for train folding trays
  - Mobile joint for train seat headrests

Mobile joint for folding trays

Hinges for headrests

Hinge for train apron

Hinge for tram apron

Hinge for underground seats

Solutions for street furniture and street lighting industry

The demands of this industry concern both parts which are manufactured according to a client's design and parts which are manufactured to customer's drawings. In some cases, the standard parts may also be suitable.

PRODUCT EXAMPLES

- **Street lighting**
  - Stainless steel articulated main cover clip for instant opening of the light source
  - Lid stay
  - Concealed hinge for horizontal or vertical mast hatch
- **Street furniture**
  - Concealed hinge for dustbin lids or doors
  - Integrated locking device for doors

Budge latch for doors

Lid stay

Articulated main cover clip

Concealed hinge for vertical mast hatch

Solutions for manufacturing machinery and industrial equipment

The demands of this industry often correspond with the catalogue products, which have very diverse functions: boot opening, hatch locking, maintaining in an open position, etc.

The aesthetics of the products or their invisibility are also predominant selection criteria for these applications.

PRODUCT EXAMPLES

- **Cash dispensers / ATM**
  - Continuous hinge for doors with access to the technical area
  - Automatic slide for locking the access caps to the technical area into an open position
- **Manufacturing machinery**
  - Detent hinge to maintain guards of machines in an open position
  - Vibration proof locking of access caps to the technical area
  - Hinge made of polyamide for good mechanical resistance and strong resistance to corrosion

Detent hinge

Automatic slide

Vibration proof locking system

Hinge for flush doors

Guidelines

- Each product falls into one of the 4 major product families.
- All parts made of stainless steel are detailed at the end of the catalogue.
- All parts made of aluminium are detailed at the end of the catalogue.
- Each product has a list of associated references, as well as a 2D plan with useful dimensions and a picture for visualising the product.
- More information is available for certain products.
- Icons are used to facilitate comprehension and provide information regarding materials, RoHS compliance, angles of opening, etc.

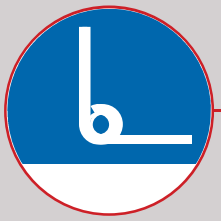

Product family

Product name

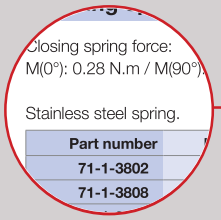

Specifications and comments

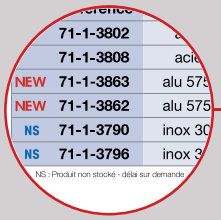

Tables of references, product characteristics, new product and non-stocked product (NS).

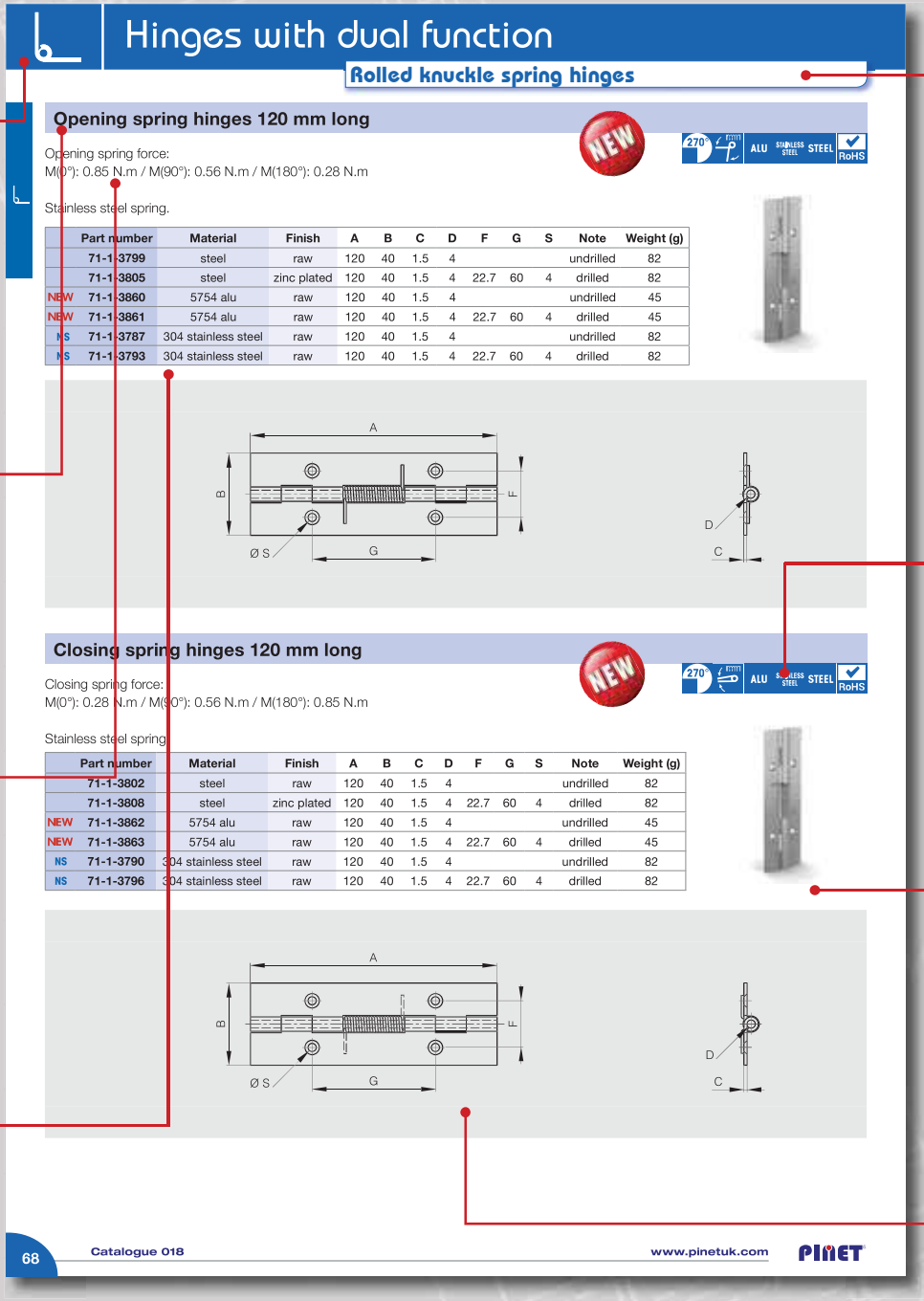

Hinges with dual function

Rolled knuckle spring hinges

Opening spring hinges 120 mm long

Opening spring force:
M(0°): 0.85 N.m / M(90°): 0.56 N.m / M(180°): 0.28 N.m

Stainless steel spring.

	Part number	Material	Finish	A	B	C	D	F	G	S	Note	Weight (g)
	71-1-3799	steel	raw	120	40	1.5	4				undrilled	82
	71-1-3805	steel	zinc plated	120	40	1.5	4	22.7	60	4	drilled	82
NEW	71-1-3860	5754 alu	raw	120	40	1.5	4				undrilled	45
NEW	71-1-3861	5754 alu	raw	120	40	1.5	4	22.7	60	4	drilled	45
NS	71-1-3787	304 stainless steel	raw	120	40	1.5	4				undrilled	82
NS	71-1-3793	304 stainless steel	raw	120	40	1.5	4	22.7	60	4	drilled	82

Closing spring hinges 120 mm long

Closing spring force:
M(0°): 0.28 N.m / M(90°): 0.56 N.m / M(180°): 0.85 N.m

Stainless steel spring.

	Part number	Material	Finish	A	B	C	D	F	G	S	Note	Weight (g)
	71-1-3802	steel	raw	120	40	1.5	4				undrilled	82
	71-1-3808	steel	zinc plated	120	40	1.5	4	22.7	60	4	drilled	82
NEW	71-1-3862	5754 alu	raw	120	40	1.5	4				undrilled	45
NEW	71-1-3863	5754 alu	raw	120	40	1.5	4	22.7	60	4	drilled	45
NS	71-1-3790	304 stainless steel	raw	120	40	1.5	4				undrilled	82
NS	71-1-3796	304 stainless steel	raw	120	40	1.5	4	22.7	60	4	drilled	82

68 Catalogue 018 www.pinetuk.com PINET

General information

- Dimensions (in millimetres) and weights (in grams) are provided as a guide only.
- Our involvement concerns only those technical characteristics stated in the catalogue and provided that our technical departments have confirmed that no changes have taken place. The dimensions indicated in letters and in brackets, or in figures, are theoretical or indicative and are not subject to the general manufacturing tolerances.
- Our general manufacturing tolerances are in line with the NF E 02-352 standard in regular class (n), unless otherwise indicated.
- For more information on tolerance or for specific information, please contact our sales department.
- In the case of specific applications, particular uses or regulatory requirements, we recommend that you consult the relevant bodies in the field concerned, or perform preliminary tests.
- The product images shown in the catalogue are non-binding.
- The materials featured in this catalogue can come in various shades without prior notice.
- We reserve the right to carry out technical modifications (dimensions, decoration, packaging, etc) or to withdraw a production run without notice, in our aim to improve our products.
- We strive to maintain sufficient levels of stock to ensure quick shipment; however, lead times depend on the availability of the items in question.
- Please note there is a minimum invoice value of €250 excl. tax. Below this amount, an administrative fee of €35 excl. tax. will be charged.
- Please let us know of any errors or anomalies you might find in this catalogue and share with us any comments or suggestions you may have. These will be taken into consideration for future editions.

This edition replaces the previous one.

Product range

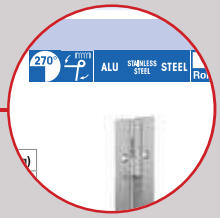

Explanatory icons

3D view

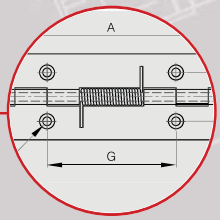

2D drawing

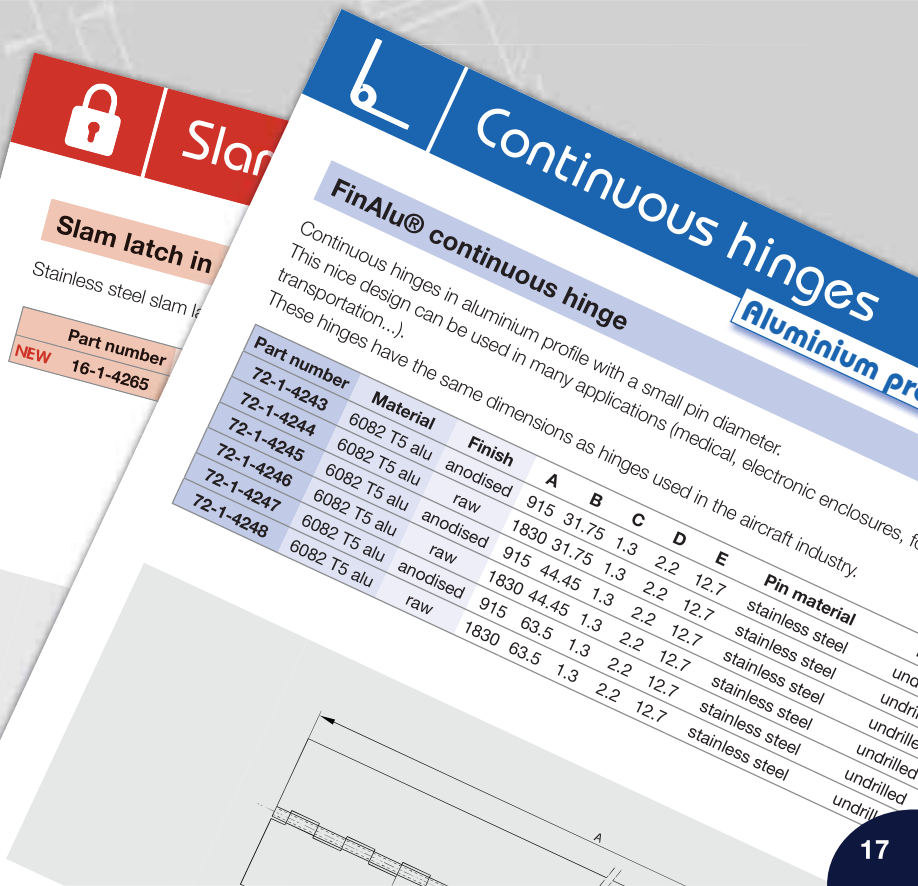

Terminology

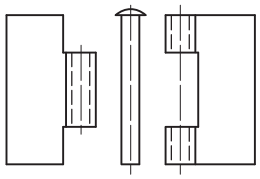

Hinge

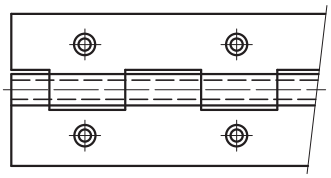

Continuous hinge

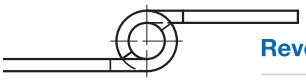

Reversed leaves

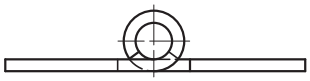

Flat leaves

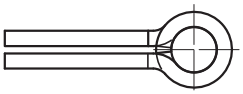

Offset leaves

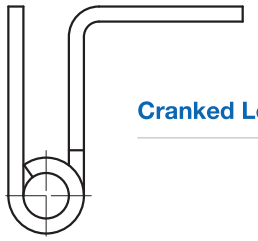

Cranked Leaf

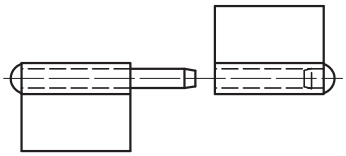

Pin hinge

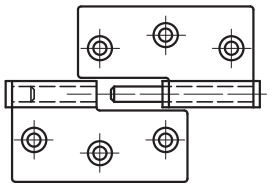

Lift-off hinges

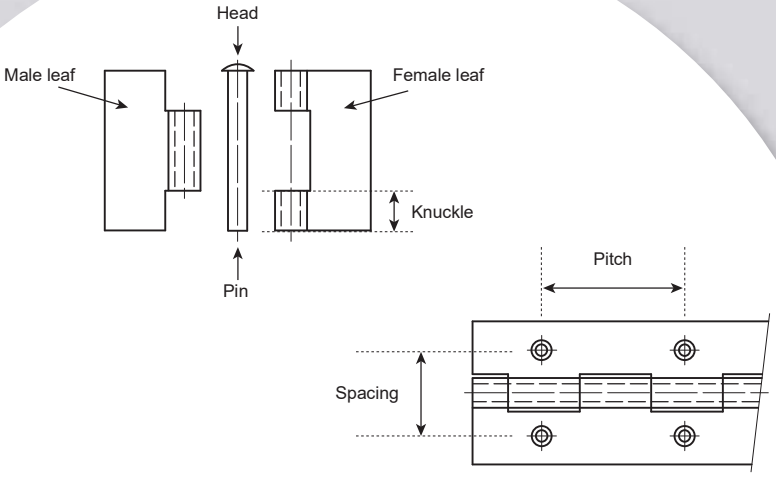

HINGES

INDEX - HINGES

CONTINUOUS HINGES

NEW		FinAlu® continuous hinge	33
		Aluminium profile continuous hinge - 50 mm	34
		Rolled knuckle continuous hinge - 15 mm width	35
		Rolled knuckle continuous hinge - 20 mm width	35
		Rolled knuckle continuous hinge - 25 mm width	36
		Rolled knuckle continuous hinge - 30 mm width	37
		Rolled knuckle continuous hinge - 32 mm width	38
		Rolled knuckle continuous hinge - 35 mm width	38
		Rolled knuckle continuous hinge - 40 mm width	39
		Rolled knuckle continuous hinge - 50 mm width	40
		Rolled knuckle continuous hinge - 57 mm width	41
		Rolled knuckle continuous hinge - 60 mm width	41
		Rolled knuckle continuous hinge - 63 mm width	42
		Rolled knuckle continuous hinge - 70 mm width	42
		Rolled knuckle continuous hinge - 76 mm width	42
		Rolled knuckle continuous hinge - 80 mm width	43
		Rolled knuckle continuous hinge - 100 mm width	43
		Rolled knuckle continuous hinge - 120 mm width	44
		Rolled knuckle continuous hinge - 127 mm width	44
NEW		Interleaf continuous hinge	45
		Polymer continuous hinges in 15.25 meter rolls	46
		Drilled continuous hinge with one cranked leaf	47
		Undrilled continuous hinge with one cranked leaf	47
		Continuous hinge with two cranked leaves	48
		Rolled knuckle continuous hinge “Imperial” dimension	48
		Double knuckle continuous hinge	49
		Seal gasket for double knuckle continuous hinge	49
		Humidity drain gasket	50

CONCEALED HINGES

		Concealed hinges A - 120° opening	51
		Concealed hinges B - 120° opening	51
		Concealed hinge with removable pin - 110° opening	52
		Concealed hinges with retractable pin	52
		Concealed pin hinges - 100° opening	53
		Concealed pin hinges - 120° opening	53
		Concealed hinges with spring - 95° opening	54
		Concealed hinges without spring - 95° opening	54
		Concealed hinge with friction - 90° opening	55
NEW		Concealed hinge with friction - 130° opening	55
		Concealed hinge - 180° opening	56
		Multi link concealed hinges - 180° opening	56
NEW		3-way adjustable concealed hinge	57
		Concealed hinge with friction - 180° opening	58
		Concealed hinge with removable pin - 180° opening	59
NEW		Long concealed spring hinges - 180 ° opening	60
		Concealed heavy duty hinge for flush doors - 90° opening	61
		Concealed heavy duty hinge for flush doors - 90° opening	61
		Concealed heavy duty hinge for flush doors - 90° opening	62
		Concealed weld-on springloaded pin hinge	62
		Concealed springloaded pin hinges A	63
		Concealed springloaded pin hinges B	63
NEW		Concealed hinge A - 90° opening	64
NEW		Concealed hinge B - 90° opening	64
NEW		Concealed hinge C - 90° opening	65
NEW		Heavy duty concealed hinge - opening 90°	66
		Concealed hinges - 90° opening	67
		Concealed hinges - 125° opening	68
NEW		Concealed hinges (size M) - 125° opening	69
		Concealed hinge - 110° opening	70

INDEX - HINGES

INDEX - HINGES

		Spring loaded concealed hinge - 110° opening	70
NEW		Concealed hinge - 7 axis - steel plates - 110° opening	71
NEW		Spring loaded concealed hinge - 7 axis - steel plates - 110° opening	71
		Spring loaded concealed hinges - 90° opening	72
		Spring loaded concealed hinges - 150° opening	72
		Concealed hinges with two cranked leaves - undrilled - 120° opening - version A	73
		Concealed hinges with two cranked leaves - drilled - 120° opening - version A	73
		Concealed hinges with two cranked leaves - undrilled - 120° opening - version B	74
		Concealed hinges with two cranked leaves - drilled - 120° opening - version B	74

HINGES WITH DUAL FUNCTION

NEW		Polymer hinges with or without adjustable spring torque	77
NEW		Spring hinges - aluminium profile 0.20 N.m - diameter 8	78
NEW		Spring hinges - aluminium profile 0.50 N.m - diameter 8	79
NEW		Spring hinges - aluminium profile 0.70 N.m - diameter 8	79
NEW		Spring hinges - aluminium profile 0.90 N.m - diameter 8	80
NEW		Spring hinges - aluminium profile 0.35 N.m - diameter 13	81
NEW		Spring hinges - aluminium profile 0.70 N.m - diameter 13	82
NEW		Spring hinges - aluminium profile 1.3 N.m - diameter 13	83
NEW		Spring hinges - aluminium profile 3.80 N.m - diameter 18	84
NEW		Stainless steel hinges with concealed spring 0.35 N.m	85
NEW		Stainless steel hinges with concealed spring 0.7 N.m	85
NEW		Stainless steel hinges with concealed spring 1.3 N.m	86
NEW		Compact spring hinges 1.6 N.m	87
NEW		Compact spring hinges 2.2 N.m	87
		Opening spring hinge 2.2 N.m	88
NEW		Opening spring hinges 120 mm long	89
NEW		Closing spring hinges 120 mm long	89
NEW		Opening spring hinges 180 mm long	90
NEW		Closing spring hinges 180 mm long	90
NEW		Opening spring hinges 240 mm long	91

INDEX - HINGES

NEW	Closing spring hinges 240 mm long	91
	Spring hinges 50 mm long	92
	Spring hinges 60 mm long - with 2 holes	92
	Spring hinge 60 mm long - with 4 holes	93
	Spring hinges 75 mm long - drilled	93
	Spring hinges 75 mm long - undrilled	94
	Spring hinges 80 mm long	94
	Spring hinges 160 mm long	95
	Spring hinges 170 mm long	95
	Cranked spring hinge 66 mm long	96
	Cranked spring hinge 60 mm long	96
	Spring loaded lift-off hinges for doors	97
	Lift-off rising hinge in stainless steel	98
NEW	Spring-assist torque hinge	99
NEW	Cover for spring-assist torque hinge	100
NEW	Balance-adjustable lift-assist hinge	101
NEW	Spring hinges with soft-close dampening	102
NEW	Soft close hinges for vertical application	103
NEW	Soft-close dampening hinges in aluminium	104
	Soft-close dampening hinge in stainless steel	105
	Soft-close dampening hinges in plastic	106
NEW	Soft-close dampening lift-off hinge	107
	Small friction hinges - adjustable	108
NEW	Large friction hinges - adjustable	108
NEW	Hinges with or without friction in stainless steel - friction torque 3 N.m	109
NEW	Hinges with or without friction in stainless steel - friction torque 4.5 N.m	109
NEW	Hinges with or without friction in stainless steel - friction torque 5 N.m	110
NEW	Hinges with or without friction in stainless steel - friction torque 8 N.m	110
NEW	Stainless steel torque hinge 2 N.m	111
NEW	Lift-off torque hinges	112

INDEX - HINGES

		One way torque hinge - constant torque 9 N.m / set	113
		Dual axis torque hinge - 30 x 60 mm	114
		Dual axis torque hinge - 50 x 76 mm	115
NEW		Torque hinge A	116
NEW		Torque hinge B	117
		Swivel torque hinge - torque 2 N.m	118
NEW		Swivel torque hinge with hole diameter 21.5 mm - 5 N.m	118
		Swivel torque hinge with hole diameter 34 mm - torque 7 N.m	119
		Mini torque hinges - torque 0.25 N.m	119
		Hi-Klik™ detent hinges - small	120
		Hi-Klik™ detent hinges - large	120
		Detent plastic hinges	121
		Hinge with stop at 115°	121
NEW		Multi angle locking hinge A with lever	122
NEW		Free axis hinge A	123
NEW		Multi angle locking hinge B with lever	124
NEW		Free axis hinge B	125
		Hinge with stop at 60°	126
NEW		Hinge with integrated stop at 60°	126
		Compression latching hinges	127
		Hinge for insulated door	128

HEAVY DUTY HINGES

		Forged hinges - 3 knuckles	129
		Forged hinges with reversed leaves - 3 knuckles	129
NEW		Forged hinges - 5 knuckles	130
		Forged lift-off hinges	131
		Half leaves for Modulo hinges - thickness 3 mm	133
		Half leaves for Modulo hinges - thickness 4 mm	133
		Half leaves for Modulo hinges - thickness 5 mm	134
		Half leaves for Modulo pin hinges - thickness 3 mm	134

		Half leaves for Modulo pin hinges - thickness 4 mm	135
		Half leaves for Modulo pin hinges - thickness 5 mm	135
		Pin in POM for Modulo system	136
		Expanded pin BG for Modulo system	136
		Headed pin BT for Modulo system	137
		Plug (VA) for Modulo system	137
NEW		Heavy duty hinge 115 x 70 mm - 5 knuckles	138
NEW		Heavy duty hinge 115 x 125 mm - 5 knuckles	138
NEW		Heavy duty hinge 115 x 155 mm - 5 knuckles	139
NEW		Heavy duty hinge 115 x 125 mm - 3 knuckles	139
NEW		Heavy duty hinge 115 x 155 mm - 3 knuckles	140
NEW		Heavy duty hinge 115 x 215 mm - 3 knuckles	140
		Heavy duty hinge - 66 x 230 mm	141
		Heavy duty hinge - 66 x 215 mm	141
		Heavy duty hinges - 65 x 230 mm	142
		Heavy duty hinge - 130 x 95 mm	142
NEW		Heavy duty hinge 63.5 x 38 mm	143
NEW		Heavy duty hinge 76 x 50 mm	143
NEW		Stainless steel dual washer hinge 101.6 x 73 mm	144
NEW		Polymer bushing and stainless steel washer hinge 101.6 x 76.2 mm	144
NEW		Bronze bushing hinge 101.6 x 76.2 mm	145
NEW		Polymer shrouded bushing hinge 101.6 x 76.2 mm	145
NEW		Polymer shrouded bushing hinge 101.6 x 88.9 mm	146
NEW		Polymer bushing lift-off hinge	146
NEW		Stainless steel and bronze shrouded bushing hinge 114.3 x 114.3 mm	147
		Round top weld-on steel hinges - brass washer	148
		Round top weld-on steel hinges - steel pin - ball bearing	148
		Round top weld-on steel hinges - steel pin - brass washer - with grease nipple	149
		Round top weld-on aluminium hinges - stainless steel pin - stainless steel washer	149
		Flat top weld-on steel hinges - brass washer	150

INDEX - HINGES

	Flat top weld-on stainless steel hinges - stainless steel pin - brass washer	150
	Flag hinges A - steel pin - brass washer	151
	Flag hinges B - steel pin - brass washer	151
	Heavy duty pin hinges	152

CARBON KEVLAR HINGES

	Carbon Kevlar hinges - 36 mm width	153
	Carbon Kevlar hinges - 50 mm width	153
	Carbon Kevlar hinges with glass fibre - 50 mm width	154

POLYMER HINGES

	Square design hinges with countersunk holes	155
	Square design hinges with studs	155
	Symmetrical design hinges	156
	Asymmetrical design hinges	156
	Polyamide hinges with countersunk holes	157
	Polyamide hinges with studs	157
	Polyamide hinges combined studs and holes	158
	Heavy duty plastic hinge - 180° opening	158
NEW	4-hole square polyamide hinge with carbon fibre	159
NEW	6-hole square polyamide hinges with carbon fibre	159
NEW	Symetrical polyamide hinges with carbon fibre	160
NEW	Asymmetrical polyamide hinges with carbon fibre	160
	Plastic hinge 63.5 mm long	161
	Plastic hinges 63.5 mm long with reversed leaves	161
	Lift-off hinges in plastic	162
	Plastic hinges 25.4 mm long	163
	Plastic hinges 38.1 mm and 50.8 mm long	163
	Plastic hinges 76.2 mm long	164
	Plastic hinges 88.9 mm and 101.6 mm long	164
	Polymer continuous hinges in 15.25 meter rolls	165

COMMON HINGES

NEW		Square design stainless steel hinge	166
		Hinge 30 x 30 mm	166
		Square hinges with two offset leaves and removable pin - no holes	167
NEW		Square hinges with two offset leaves and removable pin - with 4 holes	167
NEW		Square hinges with two offset leaves and removable pin - with 6 holes	168
		Square hinges with two offset leaves and riveted pin - with 4 holes	168
NEW		Square hinges with two offset leaves and riveted pin - with 6 holes	169
		Square hinges with no offset leaf and riveted pin - no holes	169
		Square hinges with no offset leaf and riveted pin - with 4 holes	170
NEW		Square hinges with no offset leaf and riveted pin - with 6 holes	170
		Hinge with nylon washers	171
		Hinge with oblong holes	171
NEW		Mini brass-plated steel hinges 15 x 9 mm	172
NEW		Mini brass-plated steel hinges 16 x 12 mm	172
NEW		Mini brass-plated steel hinges 20 x 14 mm	173
NEW		Mini brass-plated steel hinges 25 x 12 mm	173
NEW		Mini brass-plated steel hinges 25 x 16 mm	174
		Hinge 50 x 30 mm	175
		Hinges 50 x 40 mm	175
		Hinges 60 x 35 mm	176
		Hinge 62 x 44 mm	176
		Hinge 75 x 40 mm	177
		Small hinges 30 to 50 mm long	177
		Hinges 60 to 100 mm long	178
		Hinge 100 x 84 mm	178
NEW		Small FinAlu® hinges	179
NEW		Aluminium profile hinges 30 x 35 mm	180
NEW		Aluminium profile hinges 60 x 35 mm	180
NEW		Aluminium profile hinges 90 x 35 mm	181
NEW		Aluminium profile hinges 120 x 35 mm	181

INDEX - HINGES

	Aluminium profile hinges - diameter 13	182
	Heavy duty aluminium profile hinges	182
	Aluminium hinges - 50 mm width	183
	Aluminium hinges with reversed leaves - 50 mm width	183
	Clean room lift-off hinges 65 x 60 mm	184
	Aluminium lift-off hinges 80 x 80 mm	184
	Aluminium lift-off hinges 100 x 100 mm	185
	Brass hinge - 4 holes	185
	Brass hinges - 6 holes A	186
	Brass hinges - 6 holes B	186
	Lift-off hinges 30 mm long	187
	Lift-off hinges 40 mm long	187
	Lift-off hinges 50 x 30 mm	188
	Lift-off hinges 60 to 80 mm long	188
	Lift-off hinges 80 x 60 mm - stainless steel	189
	Lift-off hinges 80 x 80 mm - stainless steel with 6 holes	189
	Lift-off hinges 100 x 82 mm - stainless steel with 8 holes	190

VARIOUS HINGES

	Hinge for marine applications - 36.5 x 38 mm	191
	Hinge for marine applications - 36.5 x 56.5 mm	191
	Hinge for marine applications - 36.5 x 76 mm	192
	Hinges for marine applications - 36.5 x 65.5 mm	192
	Hinge for marine applications - 38.1 x 71.1 mm	193
	Hinge for marine applications - 52 x 70 mm	193
	Hinge for marine applications - 30 x 101 mm	194
	Hinge for marine applications - 38 x 178 mm	194

	Hinge for marine applications - 40.1 x 137.3 mm	195
	Brass hinge - 30 x 98.5 mm	195
	Brass hinge - 30 x 76 mm	196
	Small butt hinge with one cranked leaf 38 mm	197
	Small butt hinges with one cranked leaf and removable pin 38 mm	197
	Small butt hinge with one cranked leaf 50 mm	198
	Small butt hinge with one cranked leaf and removable pin 50 mm	198
	Small butt hinge with two cranked leaves and removable pin 38 x 18.5 mm	199
	Small butt hinge with two cranked leaves and removable pin 38 x 44.8 mm	199
	Small butt hinges with two cranked leaves and removable pin 55 x 38 mm	200
	Small butt hinge with two cranked leaves 55 x 53.7 mm	200
	Small butt hinges with one cranked leaf 38 mm	201
	Small butt hinge with two cranked leaves 60 mm	201
	Small butt hinge with one cranked leaf 60 mm	202
	Small butt hinge with one cranked leaf 66 mm	202
	Pin hinge with one cranked leaf	203
	Stainless steel hinge with removable pin	204
	Removable pin hinges with nylon washers	204
	Hinges 62 x 74 mm	205
	Hinge 20 x 65 mm	205
	Hinges 20 x 77mm and 22 x 120 mm	206
	Hinge 25 x 140 mm	206
	Hinges 30 x 140 mm	207
	Hinge 30 x 83 mm	207
	Zinc die-cast hinges 30 mm long	208
	Zinc die-cast hinge 60 mm long	208

INDEX - HINGES

Zinc die-cast hinge 90 x 60 mm	209
Zinc die-cast pin hinge for surface mounted door	209
Zinc die-cast lift-off hinges 25.5 mm	210
Zinc die-cast lift-off hinges 64 x 33 mm	210
Zinc die-cast lift-off hinges 64 x 50 mm	211
Zinc die-cast lift-off hinges 80 mm	211
Bolt-on hinges in 2 parts	212
Bolt-on hinges in 3 parts - 49 mm long	212
Bolt-on hinge in 3 parts - 36 mm long	213
Bolt-on hinge in 3 parts with plate	213
Brass hinge with removable pin - 3 knuckles	214
Brass hinges with removable pin - 4 knuckles	214
Lift-off hinges in aluminium profile with a stainless steel pin	215
Flag hinge with washer - 62 x 62 mm	215
Flag hinge without washer with two offset leaves	216
Flag hinge with washer with two offset leaves	216
Flag hinge without washer - flat knuckle	217
Flag hinge with washer - flat knuckle	217
Flag hinge without washer - drilled - flat knuckle	218
NEW Dual Axis Torque Hinge	219
Glass door hinge in brushed stainless steel	220
Glass door hinge in stainless steel	220

Technical information for pin or lift-off hinges

Way the door opens

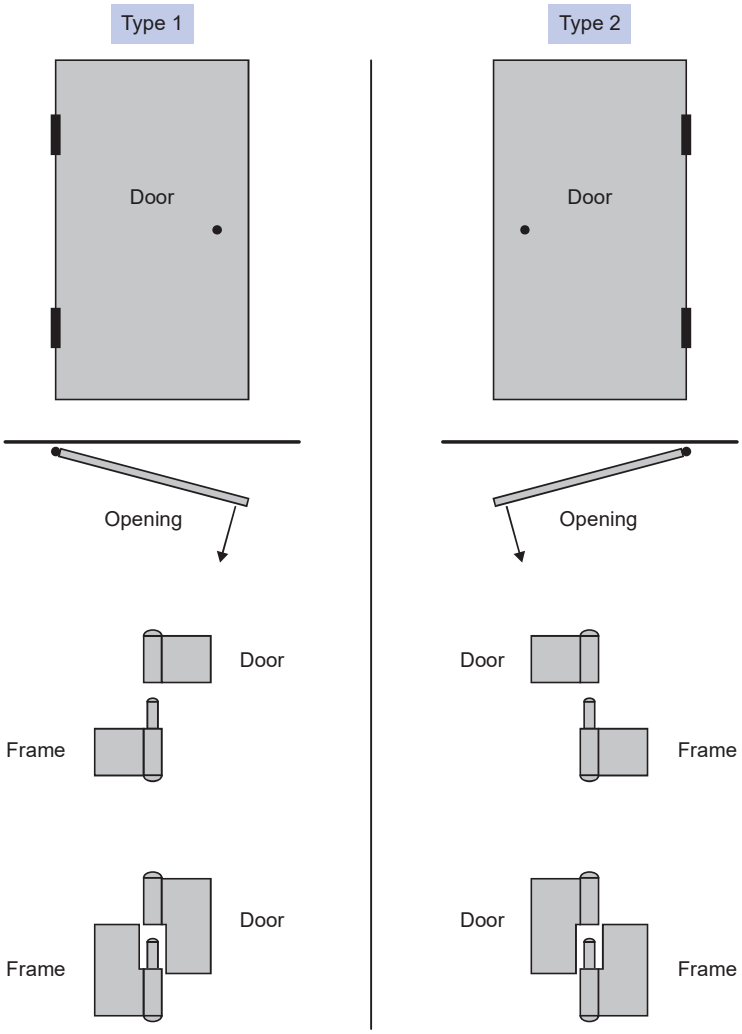

Mounting instruction

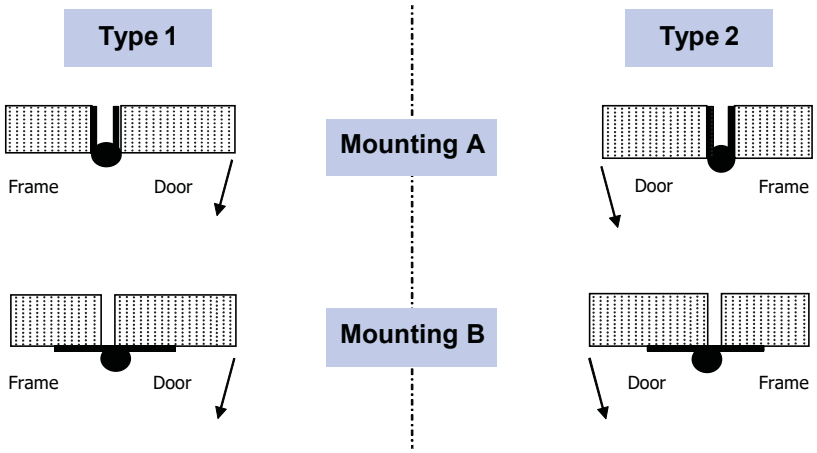

Caution:
Type 1 lift-off hinges mounted as A become Type 2 when mounted as B
Type 2 lift-off hinges mounted as A become Type 1 when mounted as B

Fixing holes configurations

Dimension (S) is the hole diameter.
For countersunk holes, dimension (S) is the inside diameter.

For countersunk holes, depending on hinge thickness and selected screws, different configurations may occur:

A

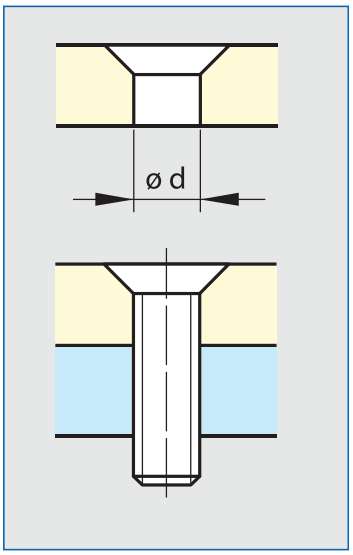

B

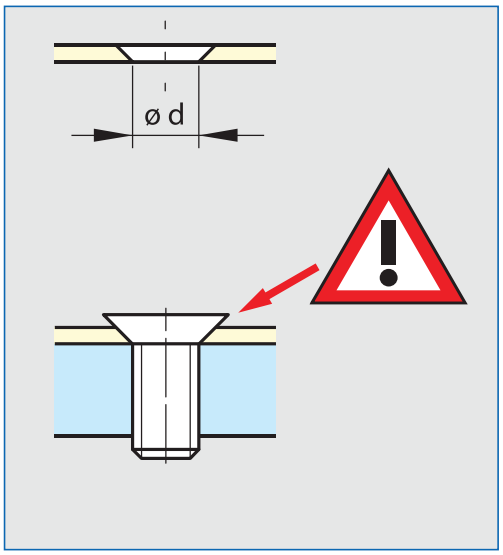

C

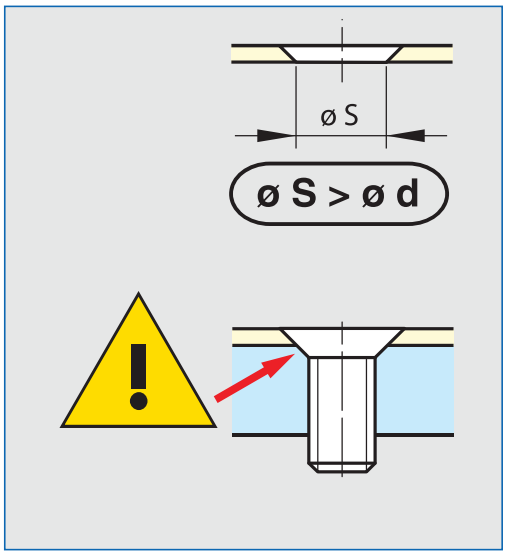

A: ideal situation (hinge thickness is large enough)
B: screw head protrudes from hinge (may occur if hinges are too thin)
C: screw head is flush but the mounting surface has to be enlarged (may occur if hinges are thin)

FinAlu® continuous hinge

NEW

270° ALU RoHS

Continuous hinges in aluminium profile with a small pin diameter.
This nice design can be used in many applications (medical, electronic enclosures, food equipment, transportation...).
These hinges have the same dimensions as hinges used in the aircraft industry.

	Part number	Material	Finish	A	B	C	D	E	Pin material	Note	Weight (g)
	72-1-4243	6082 T5 alu	anodised	915	31.75	1.3	2.2	12.7	stainless steel	undrilled	150
NS	72-1-4338	6082 T5 alu	blue anodised	915	31.75	1.3	2.2	12.7	stainless steel	undrilled	150
NS	72-1-4339	6082 T5 alu	red anodised	915	31.75	1.3	2.2	12.7	stainless steel	undrilled	150
NS	72-1-4340	6082 T5 alu	bronze anodised	915	31.75	1.3	2.2	12.7	stainless steel	undrilled	150
NS	72-1-4341	6082 T5 alu	gold anodised	915	31.75	1.3	2.2	12.7	stainless steel	undrilled	150
	72-1-4244	6082 T5 alu	raw	1830	31.75	1.3	2.2	12.7	stainless steel	undrilled	300
NEW	72-1-4418	6082 T5 alu	anodised	915	38.1	1.3	2.2	12.7	stainless steel	undrilled	170
NEW	72-1-4419	6082 T5 alu	raw	1830	38.1	1.3	2.2	12.7	stainless steel	undrilled	340
	72-1-4245	6082 T5 alu	anodised	915	44.45	1.3	2.2	12.7	stainless steel	undrilled	190
NS	72-1-4342	6082 T5 alu	blue anodised	915	44.45	1.3	2.2	12.7	stainless steel	undrilled	190
NS	72-1-4343	6082 T5 alu	red anodised	915	44.45	1.3	2.2	12.7	stainless steel	undrilled	190
NS	72-1-4344	6082 T5 alu	bronze anodised	915	44.45	1.3	2.2	12.7	stainless steel	undrilled	190
NS	72-1-4345	6082 T5 alu	gold anodised	915	44.45	1.3	2.2	12.7	stainless steel	undrilled	190
	72-1-4246	6082 T5 alu	raw	1830	44.45	1.3	2.2	12.7	stainless steel	undrilled	380
	72-1-4247	6082 T5 alu	anodised	915	63.5	1.3	2.2	12.7	stainless steel	undrilled	250
NS	72-1-4346	6082 T5 alu	blue anodised	915	63.5	1.3	2.2	12.7	stainless steel	undrilled	250
NS	72-1-4347	6082 T5 alu	red anodised	915	63.5	1.3	2.2	12.7	stainless steel	undrilled	250
NS	72-1-4348	6082 T5 alu	bronze anodised	915	63.5	1.3	2.2	12.7	stainless steel	undrilled	250
NS	72-1-4349	6082 T5 alu	gold anodised	915	63.5	1.3	2.2	12.7	stainless steel	undrilled	250
	72-1-4248	6082 T5 alu	raw	1830	63.5	1.3	2.2	12.7	stainless steel	undrilled	500

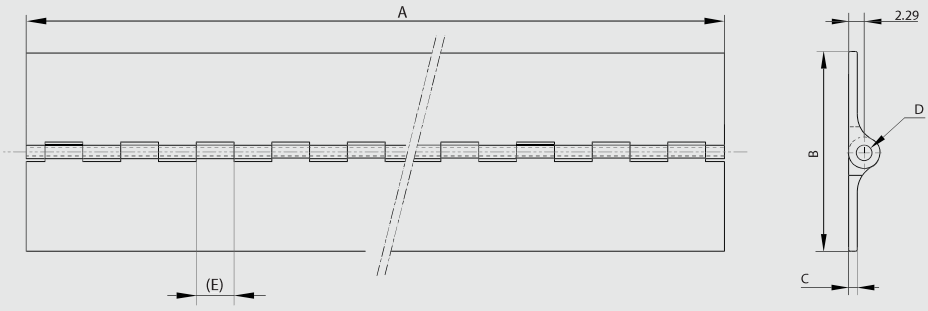

Aluminium profile continuous hinge - 50 mm

270° ALU RoHS

Opening angle 270°. Other lengths are available on request.
Specific drilling requirements are also available on request.

Part number	Material	Finish	A	B	C	D	E	Pin material	Note	Weight (g)
72-1-3316	6060 T5 alu	raw	2000	50	3	5.2	35.5	304 stainless steel	undrilled	1200

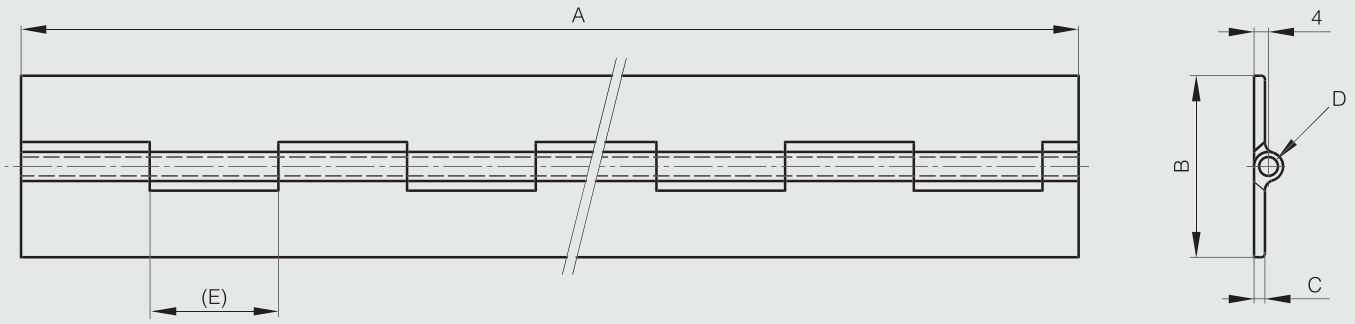

Rolled knuckle continuous hinge - 15 mm width

270° STEEL RoHS

Opening angle 270°. Other lengths and pin materials are available on request.
Specific drilling requirements are also available on request.

Part number	Material	Finish	A	B	C	D	E	Pin material	Note	Weight (g)
40-1-3327	steel	raw	2040	15	0.7	1.5	15	steel	undrilled	260

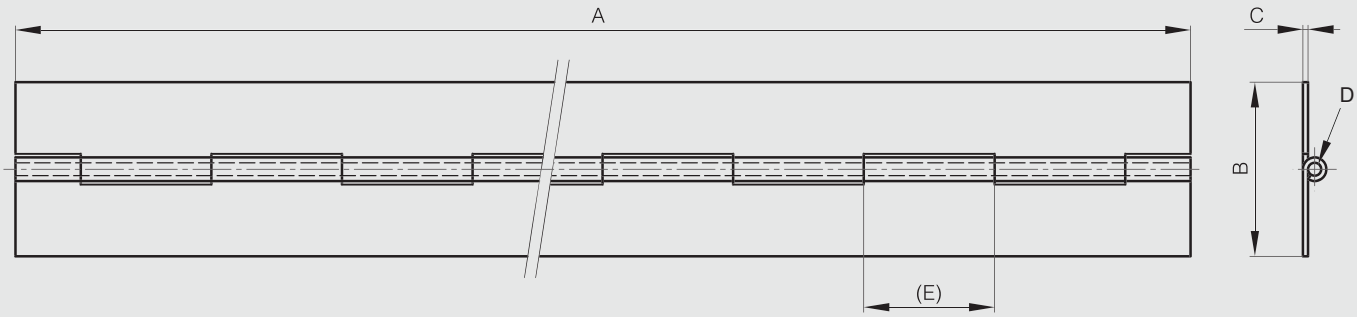

Rolled knuckle continuous hinge - 20 mm width

270° ALU STAINLESS STEEL STEEL RoHS

Opening angle 270°. Other lengths and pin materials are available on request.
Specific drilling requirements are also available on request.

Part number	Material	Finish	A	B	C	D	E	F	G	S	Pin material	Note	Weight (g)
40-1-3328	steel	raw	2040	20	0.8	2	15				steel	undrilled	370
40-1-3321	steel	raw	2040	20	0.8	2	15	11.5	60	2.8	steel	drilled	352
41-1-3529	5754 alu	raw	2000	20	0.6	2.4	15				steel	undrilled	150
42-1-3664	304 stainless steel	raw	2040	20	0.8	2	15				stainless steel	undrilled	377
42-1-4195	304 stainless steel	raw	2040	20	0.8	2	15	11.5	60	2.8	stainless steel	drilled	367

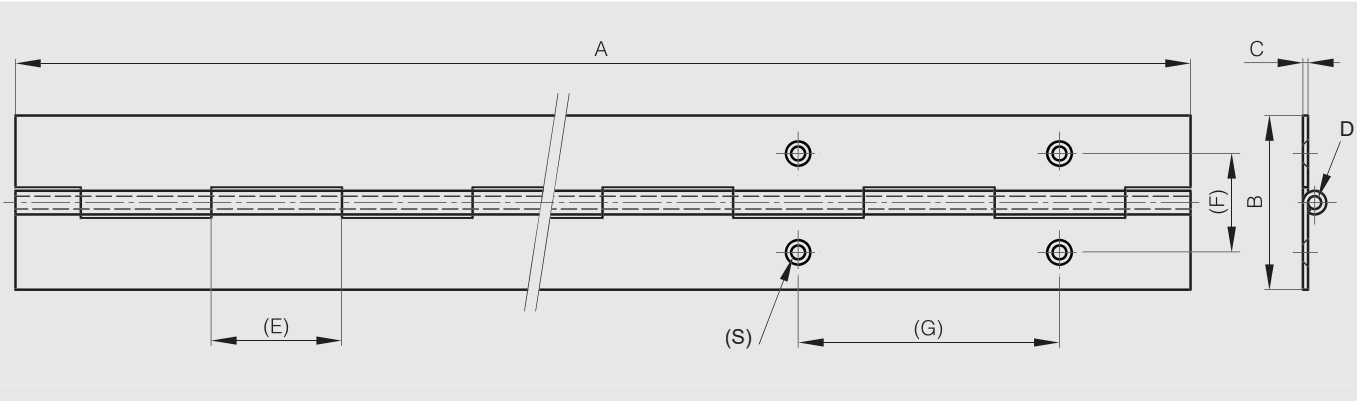

Rolled knuckle continuous hinge - 25 mm width

270° ALU STAINLESS STEEL STEEL RoHS

Opening angle 270°. Other lengths and pin materials are available on request.
Specific drilling requirements are also available on request.
Hinge in raw galvanised steel is made of pregalvanised steel. Therefore any cut surface is ungalvanised.

Part number	Material	Finish	A	B	C	D	E	F	G	S	Pin material	Note	Weight (g)
40-1-3329	steel	raw	2040	25	0.8	2	15				steel	undrilled	440
40-1-3322	steel	raw	2040	25	0.8	2	15	14	60	2.8	steel	drilled	436
40-1-4677	galvanised steel	raw	1800	25	1.2	3	30				brass	undrilled	626
41-1-3559	5754 alu	raw	1000	25	0.8	2	15				steel	undrilled	90
42-1-3910	304 stainless steel	raw	1020	25	0.8	2	15				stainless steel	undrilled	280
42-1-3767	304 stainless steel	raw	2040	25	0.8	2	15				stainless steel	undrilled	448
42-1-4196	304 stainless steel	raw	2040	25	0.8	2	15	14	60	3.6	stainless steel	drilled	437
42-1-4096	304 stainless steel	raw	1800	25	1	2	15				stainless steel	undrilled	500
42-1-3949	304 stainless steel	raw	2040	25	1	2	15				stainless steel	undrilled	558
42-1-4546	316L stainless steel	raw	1980	25	0.8	2	15				stainless steel	undrilled	445

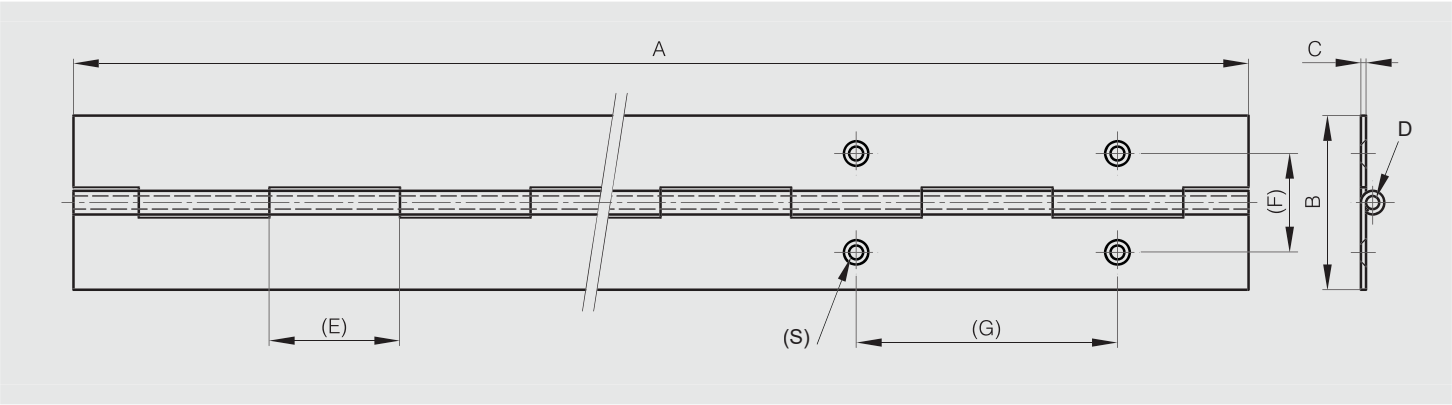

Rolled knuckle continuous hinge - 30 mm width

270° ALU STAINLESS STEEL STEEL RoHS

Opening angle 270°. Other lengths and pin materials are available on request.
Specific drilling requirements are also available on request.

Part number	Material	Finish	A	B	C	D	E	F	G	S	Pin material	Note	Weight (g)
40-1-3330	steel	raw	2040	30	0.8	2	15				steel	undrilled	510
40-1-3323	steel	raw	2040	30	0.8	2	15	16.8	60	3.9	steel	drilled	490
40-1-3679	steel	raw	2040	30	1	2	15				steel	undrilled	640
40-1-3680	steel	raw	2040	30	1	2	15	16.8	60	3.9	steel	drilled	640
40-1-4370	steel	raw	2000	30	2	6	30				steel	undrilled	1800
41-1-3560	5754 alu	raw	1980	30	1	2	15				aluminium	undrilled	205
42-1-3909	304 stainless steel	raw	1020	30	0.8	2	15				stainless steel	undrilled	255
42-1-3580	304 stainless steel	raw	2040	30	0.8	2	15				stainless steel	undrilled	522
42-1-4089	304 stainless steel	raw	1800	30	1	2	15				stainless steel	undrilled	500
42-1-3300	304 stainless steel	raw	2040	30	1	2	15				stainless steel	undrilled	670
42-1-4197	304 stainless steel	raw	2040	30	1	2	15	16.8	60	3.9	stainless steel	drilled	640
42-1-3950	304 stainless steel	raw	1995	30	1.5	4	30				stainless steel	undrilled	1283
42-1-3948	304 stainless steel	raw	1995	30	2	6	25				stainless steel	undrilled	1880
42-1-4082	316L stainless steel	raw	1020	30	1	2	15				stainless steel	undrilled	337
42-1-4000	316L stainless steel	raw	2040	30	1	2	15				stainless steel	undrilled	670

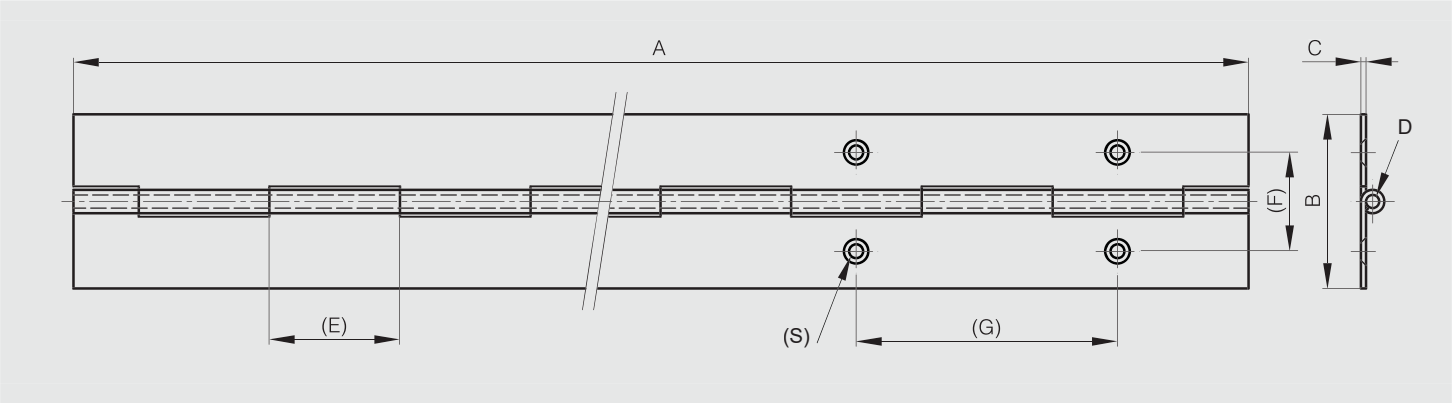

Rolled knuckle continuous hinge - 32 mm width

270° STAINLESS STEEL STEEL RoHS

Opening angle 270°. Other lengths and pin materials are available on request.
Specific drilling requirements are also available on request.

Part number	Material	Finish	A	B	C	D	E	Pin material	Note	Weight (g)
40-1-4771	steel	raw	1950	32	1.5	3	12.5	steel	undrilled	1030
42-1-4346	304 stainless steel	raw	1800	32	1.2	3	30	stainless steel	undrilled	810
42-1-4460	304 stainless steel	raw	1950	32	1.5	3	12.5	stainless steel	undrilled	1030

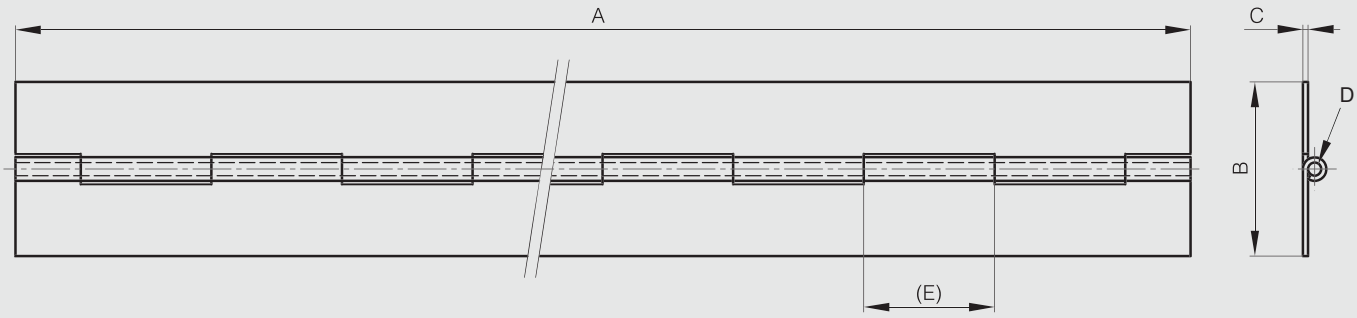

Rolled knuckle continuous hinge - 35 mm width

270° ALU STEEL RoHS

Opening angle 270°. Other lengths and pin materials are available on request.
Specific drilling requirements are also available on request.

Part number	Material	Finish	A	B	C	D	E	F	G	S	Pin material	Note	Weight (g)
40-1-3332	steel	raw	2040	35	1	2	15				steel	undrilled	700
40-1-3324	steel	raw	2040	35	1	2	15	19.5	60	4.5	steel	drilled	690
41-1-3532	5754 alu	raw	1995	35	1	3	30				aluminium	undrilled	262

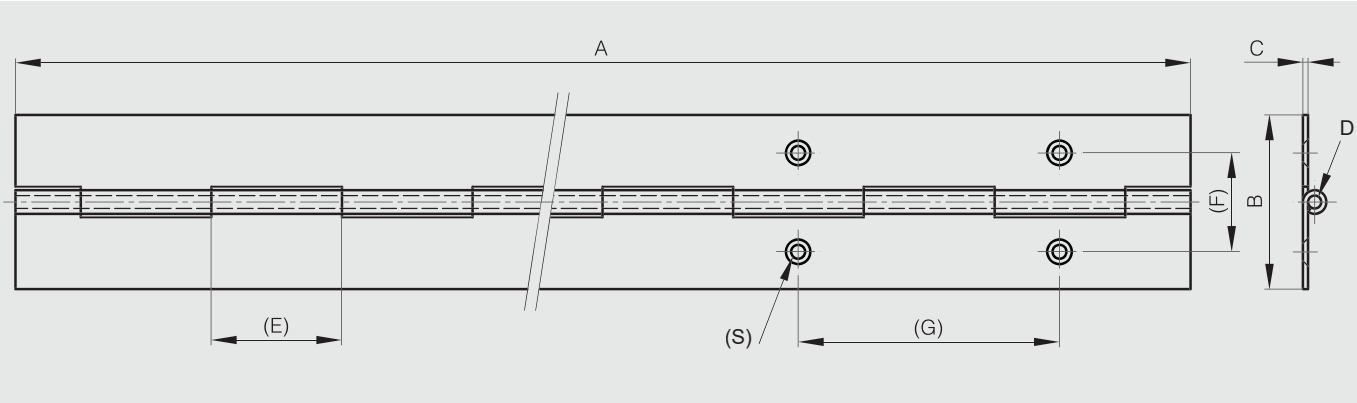

Rolled knuckle continuous hinge - 40 mm width

270° ALU STAINLESS STEEL STEEL RoHS

Opening angle 270°. Other lengths and pin materials are available on request.
Specific drilling requirements are also available on request.
Hinge in raw galvanised steel is made of pregalvanised steel. Therefore any cut surface is ungalvanised.

Part number	Material	Finish	A	B	C	D	E	F	G	S	Pin material	Note	Weight (g)
40-1-3703	steel	raw	2040	40	0.8	2	15				steel	undrilled	650
40-1-3681	steel	raw	2040	40	1.2	3	30				steel	undrilled	1077
40-1-3682	steel	raw	2040	40	1.2	3	30	22.7	60	4.2	steel	drilled	1081
40-1-4772	steel	raw	1950	40	1.5	3	12.5				steel	undrilled	1230
40-1-3683	steel	raw	2040	40	1.5	4	15				steel	undrilled	1403
40-1-4691	galvanised steel	raw	1800	40	1.2	3	30				brass	undrilled	1520
41-1-3540	5754 alu	raw	1000	40	1.2	3	30				aluminium	undrilled	180
41-1-3520	5754 alu	raw	2040	40	1.2	3	30				aluminium	undrilled	356
41-1-3521	5754 alu	raw	2000	40	1.5	4	15				aluminium	undrilled	500
42-1-4257	304 stainless steel	raw	1020	40	1.2	3	30				stainless steel	undrilled	530
42-1-4347	304 stainless steel	raw	1800	40	1.2	3	30				stainless steel	undrilled	940
42-1-4350	304 stainless steel	raw	2040	40	1.2	3	30				stainless steel	undrilled	1068
42-1-4349	304 stainless steel	raw	2040	40	1.2	3	30	22.7	60	4.2	stainless steel	drilled	1045
42-1-4461	304 stainless steel	raw	1950	40	1.5	3	12.5				stainless steel	undrilled	1230
42-1-3301	304 stainless steel	raw	2040	40	1.5	4	15				stainless steel	undrilled	1420
42-1-4199	304 stainless steel	raw	2040	40	1.5	4	15	22.7	60	4	stainless steel	drilled	1441
42-1-3770	304 stainless steel	raw	2040	44	2	6	30				stainless steel	undrilled	2463
42-1-4083	316L stainless steel	raw	1020	40	1.5	4	15				stainless steel	undrilled	700
42-1-4001	316L stainless steel	raw	2040	40	1.5	4	15				stainless steel	undrilled	1400
42-1-3665	430 stainless steel	raw	2040	40	0.8	2	15				stainless steel	undrilled	650

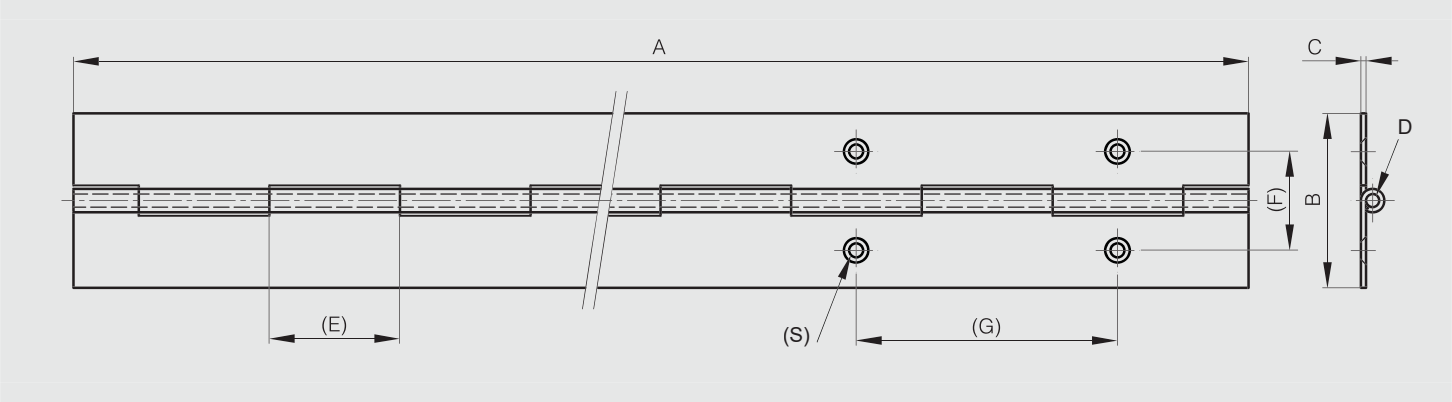

Rolled knuckle continuous hinge - 50 mm width

270° ALU STAINLESS STEEL STEEL RoHS

Opening angle 270°. Other lengths and pin materials are available on request.
Specific drilling requirements are also available on request.
Hinge in raw galvanised steel is made of pregalvanised steel. Therefore any cut surface is ungalvanised.

Part number	Material	Finish	A	B	C	D	E	F	G	S	Pin material	Note	Weight (g)
40-1-3704	steel	raw	2040	50	1.2	3	30				steel	undrilled	1317
40-1-3758	steel	raw	2040	50	1.2	3	30	28	60	4	steel	drilled	1270
40-1-4773	steel	raw	1950	50	1.5	3	12.5				steel	undrilled	1460
40-1-4355	steel	raw	2040	50	2	6	30				steel	undrilled	2540
40-1-4679	galvanised steel	raw	1800	50	1.2	3	30				brass	undrilled	1800
41-1-3531	5754 alu	raw	2040	50	1.2	3	30				aluminium	undrilled	459
41-1-3541	5754 alu	raw	1000	50	1.5	4	15				aluminium	undrilled	306
41-1-3522	5754 alu	raw	2000	50	1.5	4	15				aluminium	undrilled	612
42-1-4258	304 stainless steel	raw	1020	50	1.2	3	30				stainless steel	undrilled	650
42-1-4348	304 stainless steel	raw	1800	50	1.2	3	30				stainless steel	undrilled	1112
42-1-4353	304 stainless steel	raw	2040	50	1.2	3	30				stainless steel	undrilled	1300
42-1-4352	304 stainless steel	raw	2040	50	1.2	3	30	28	60	4	stainless steel	drilled	1270
42-1-4462	304 stainless steel	raw	1950	50	1.5	3	12.5				stainless steel	undrilled	1450
42-1-4219	304 stainless steel	raw	1800	50	1.5	4	15				stainless steel	undrilled	1500
42-1-3918	304 stainless steel	raw	1995	50	2	4	25				stainless steel	undrilled	2350
42-1-4259	316L stainless steel	raw	1000	50	1.2	3	30				stainless steel	undrilled	655
42-1-4354	316L stainless steel	raw	2040	50	1.2	3	30				stainless steel	undrilled	1310

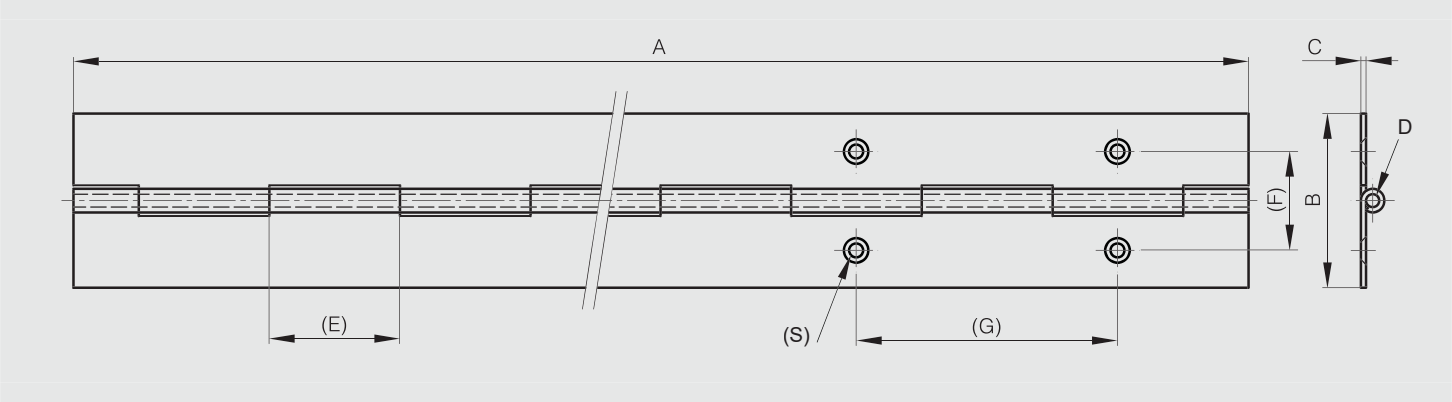

Rolled knuckle continuous hinge - 57 mm width

270° STAINLESS STEEL STEEL RoHS

Opening angle 270°. Other lengths and pin materials are available on request.
Specific drilling requirements are also available on request.
Hinge in raw galvanised steel is made of pregalvanised steel. Therefore any cut surface is ungalvanised.

Part number	Material	Finish	A	B	C	D	E	Pin material	Note	Weight (g)
40-1-4680	galvanised steel	raw	2160	57	1.5	4	15	brass	undrilled	2000
40-1-4682	galvanised steel	raw	2160	57	2	6	30	brass	undrilled	2970
42-1-4220	304 stainless steel	raw	2160	57	1.5	4	15	stainless steel	undrilled	2000

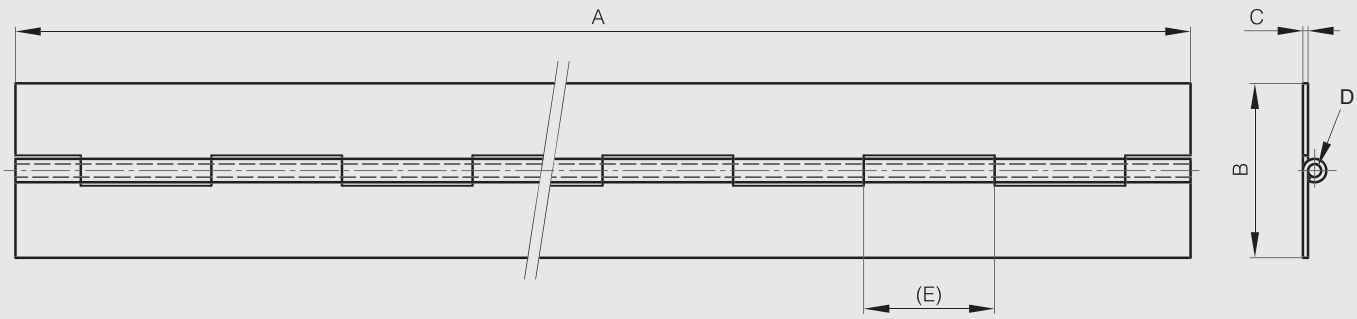

Rolled knuckle continuous hinge - 60 mm width

270° ALU STAINLESS STEEL STEEL RoHS

Opening angle 270°. Other lengths and pin materials are available on request.
Specific drilling requirements are also available on request.

Part number	Material	Finish	A	B	C	D	E	F	G	S	Pin material	Note	Weight (g)
40-1-3541	steel	raw	1995	60	1.5	5	40				steel	undrilled	2006
40-1-3335	steel	raw	2000	60	1.5	8	40				steel	undrilled	2622
40-1-4371	steel	raw	2040	60	2	6	30				steel	undrilled	2800
41-1-3523	5754 alu	raw	1995	60	2	6	30				aluminium	undrilled	998
42-1-4086	304 stainless steel	raw	1020	60	2	6	30				stainless steel	undrilled	1400
42-1-3302	304 stainless steel	raw	2040	60	2	6	30				stainless steel	undrilled	2844
42-1-4201	304 stainless steel	raw	2040	60	2	6	30	35	60	4	stainless steel	drilled	2800
42-1-4085	316L stainless steel	raw	1020	60	2	6	30				stainless steel	undrilled	1470
42-1-4002	316L stainless steel	raw	2040	60	2	6	30				stainless steel	undrilled	2913

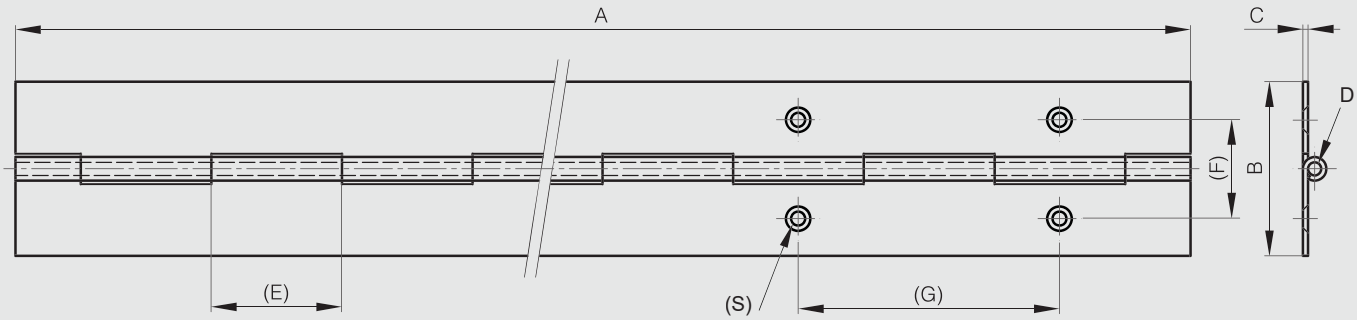

Rolled knuckle continuous hinge - 63 mm width

Opening angle 270°. Other lengths and pin materials are available on request.
Specific drilling requirements are also available on request.

Part number	Material	Finish	A	B	C	D	E	Pin material	Note	Weight (g)
42-1-4221	304 stainless steel	raw	1800	63	1.5	4	15	stainless steel	undrilled	1800

Rolled knuckle continuous hinge - 70 mm width

Opening angle 270°. Other lengths and pin materials are available on request.
Specific drilling requirements are also available on request.

Part number	Material	Finish	A	B	C	D	E	Pin material	Note	Weight (g)
40-1-4372	steel	raw	2040	70	2	6	30	steel	undrilled	3218
42-1-4097	304 stainless steel	raw	1800	70	1.5	4	15	stainless steel	undrilled	1900
42-1-3859	304 stainless steel	raw	2040	70	2	6	30	stainless steel	undrilled	3219

Rolled knuckle continuous hinge - 76 mm width

Opening angle 270°. Other lengths and pin materials are available on request.
Specific drilling requirements are also available on request.
Hinge in raw galvanised steel is made of pregalvanised steel. Therefore any cut surface is ungalvanised.

Part number	Material	Finish	A	B	C	D	E	Pin material	Note	Weight (g)
40-1-4681	galvanised steel	raw	2160	76	1.5	4	15	brass	undrilled	2952
42-1-4094	304 stainless steel	raw	2160	76	1.5	4	15	stainless steel	undrilled	2400

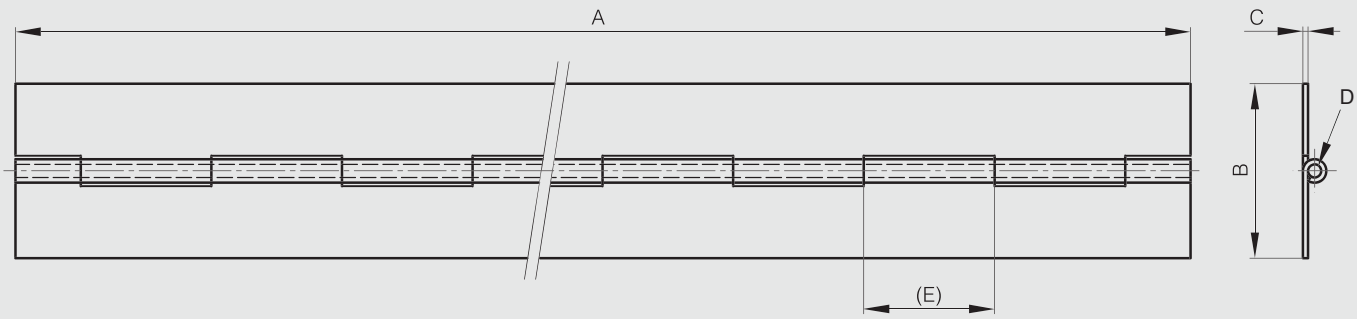

Rolled knuckle continuous hinge - 80 mm width

270° ALU STAINLESS STEEL STEEL RoHS

Opening angle 270°. Other lengths and pin materials are available on request.
Specific drilling requirements are also available on request.

Part number	Material	Finish	A	B	C	D	E	F	G	S	Pin material	Note	Weight (g)
40-1-4774	steel	raw	1950	80	1.5	3	12.5				steel	undrilled	2170
40-1-3542	steel	raw	2000	80	2	7.6	40				steel	undrilled	3900
40-1-4369	steel	raw	2000	80	3	6	40				steel	undrilled	5060
41-1-3558	5754 alu	raw	1995	80	3	6	40				aluminium	undrilled	1780
42-1-4463	304 stainless steel	raw	1950	80	1.5	3	12.5				stainless steel	undrilled	2170
42-1-3304	304 stainless steel	raw	1000	80	3	6	40				stainless steel	undrilled	2530
42-1-3569	304 stainless steel	raw	2000	80	3	6	40				stainless steel	undrilled	5060
42-1-4547	304 stainless steel	raw	2000	80	3	6	40	35	60	5.2	stainless steel	drilled	5000
42-1-4548	316L stainless steel	raw	1980	80	2	6	30				stainless steel	undrilled	3470

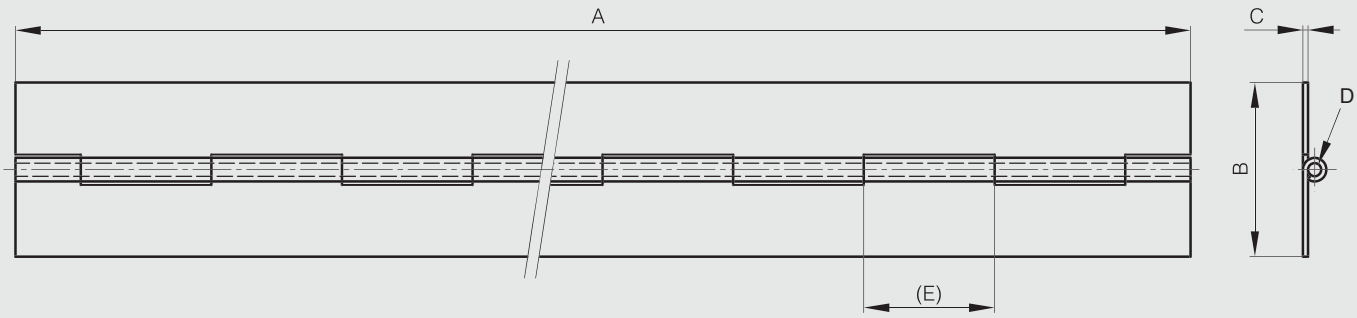

Rolled knuckle continuous hinge - 100 mm width

270° ALU STAINLESS STEEL STEEL RoHS

Opening angle 270°. Other lengths and pin materials are available on request.
Specific drilling requirements are also available on request.

Part number	Material	Finish	A	B	C	D	E	Pin material	Note	Weight (g)
40-1-3543	steel	raw	2000	100	3	10	40	steel	undrilled	7100
40-1-4769	steel	raw	1000	100	4	10	40	steel	undrilled	4690
41-1-3561	5754 alu	raw	1000	100	4	10	40	steel	undrilled	2030
42-1-4458	304 stainless steel	raw	1995	100	3	10	40	stainless steel	undrilled	7110
42-1-4459	304 stainless steel	raw	2000	100	3	6	40	stainless steel	undrilled	5930

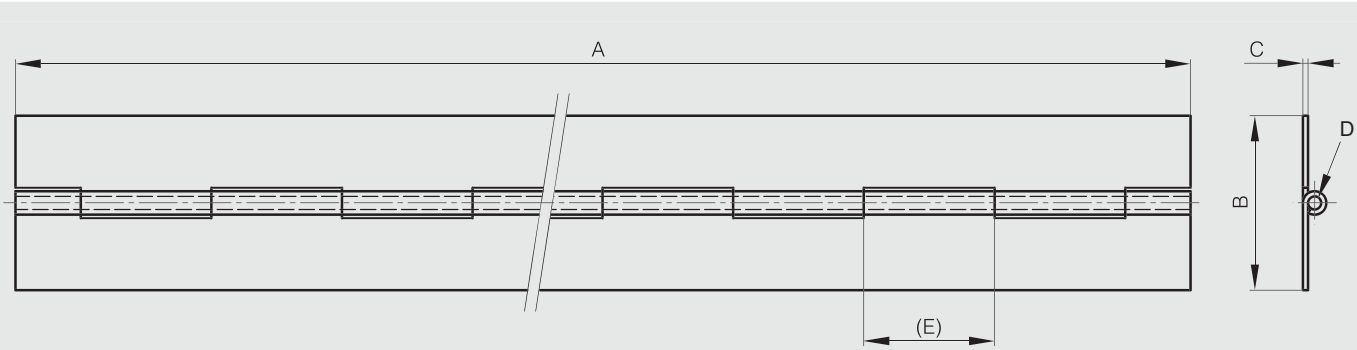

Rolled knuckle continuous hinge - 120 mm width

Opening angle 270°. Other lengths and pin materials are available on request.
Specific drilling requirements are also available on request.

Part number	Material	Finish	A	B	C	D	E	Pin material	Note	Weight (g)
40-1-4770	steel	raw	1000	120	5	10	40	steel	undrilled	6550
42-1-4095	304 stainless steel	raw	2100	120	2	6	30	stainless steel	undrilled	5000

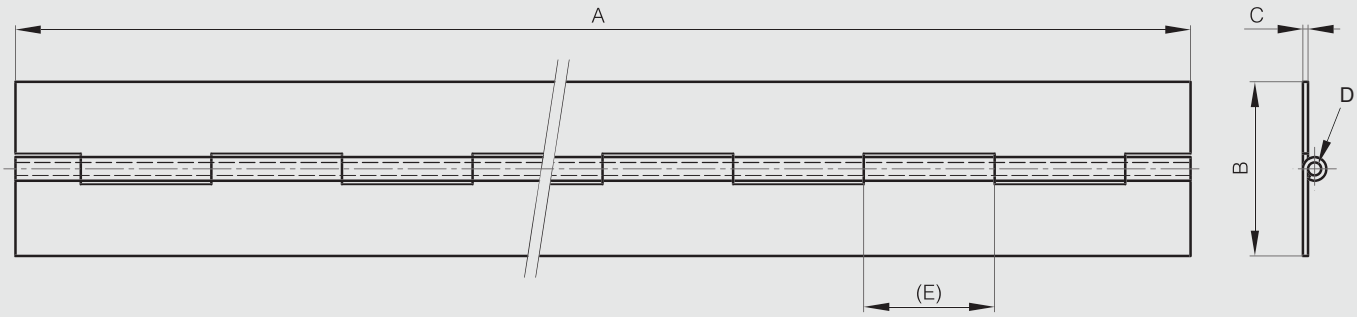

Rolled knuckle continuous hinge - 127 mm width

Opening angle 270°. Other lengths and pin materials are available on request.
Specific drilling requirements are also available on request.
Hinge in raw galvanised steel is made of pregalvanised steel. Therefore any cut surface is ungalvanised.

Part number	Material	Finish	A	B	C	D	E	Pin material	Note	Weight (g)
40-1-4685	galvanised steel	raw	2160	127	3	6	40	brass	undrilled	8000

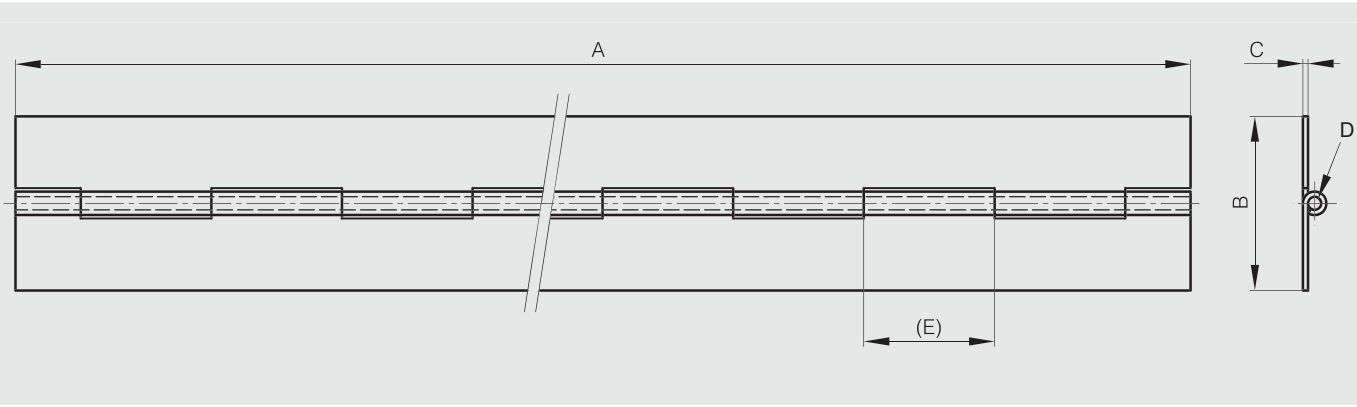

Interleaf continuous hinge

NEW

270° STAINLESS STEEL

The hinge sits directly on door frame for minimal gap (3mm).
Aesthetically stylish.
Maintenance free polymer shrouded bearings.

Tested to BS EN1935 Grade 14 (160kgs).

Produced mainly in stainless steel, for a complete description of the materials contact us.

	Part number	Material	Finish	A	B	C	D	E	S	Note	Weight (g)
NEW	42-7-4610	304 stainless steel	satin polished	2134	70.5	2.5	7	147	9	drilled	3400

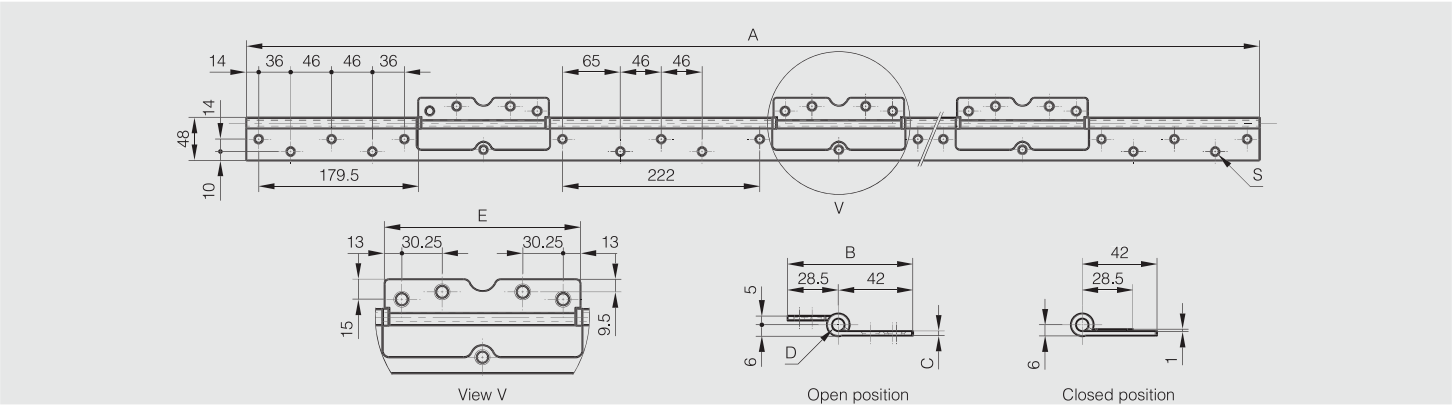

Polymer continuous hinges in 15.25 meter rolls

Technical features:
- Temperature: -40°C up to +80°C.
- Can be fixed with: rivets, screws, nails or clamps.
- Chemical resistance: oil, solvents, sea water and most chemical agents.
- Tensile resistance: 180 N/cm.
- Material offers excellent fatigue resistance.

Part number	Material	Finish	B	C	Weight (g)
44-7-3000	polypropylene	white	28.6	3.2	1080
44-7-3001	polypropylene	grey	28.6	3.2	1080
44-7-3002	polypropylene	black	28.6	3.2	1080
44-7-3003	polypropylene	white	38.1	3.2	1450
44-7-3004	polypropylene	grey	38.1	3.2	1450
44-7-3005	polypropylene	black	38.1	3.2	1450
44-7-3006	polypropylene	white	50.8	3.2	2300
44-7-3007	polypropylene	grey	50.8	3.2	2300
44-7-3008	polypropylene	black	50.8	3.2	2300
44-7-3009	polypropylene	white	76.2	3.2	3100
44-7-3010	polypropylene	grey	76.2	3.2	3100
44-7-3011	polypropylene	black	76.2	3.2	3100

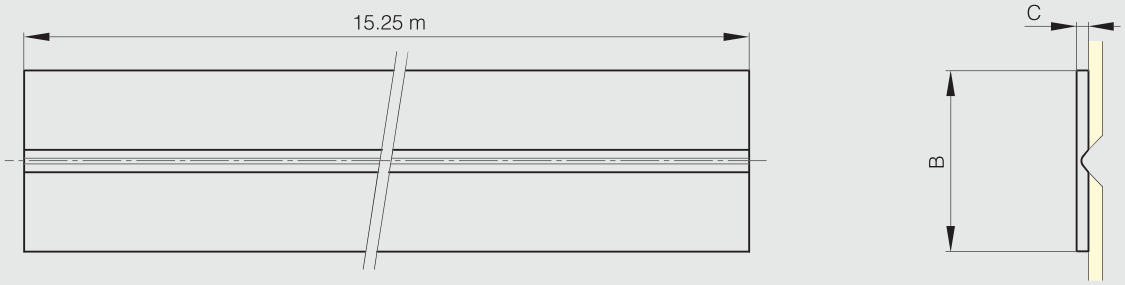

Drilled continuous hinge with one cranked leaf

Opening angle 270°. Other lengths and pin materials are available on request.
Specific drilling requirements are also available on request.

Part number	Material	Finish	A	B	C	D	E	F	G	H	S	Pin material	Note	Weight (g)
39-1-3631	steel	zinc plated	2000	31.5	1	2	30	7.5	60	20	3.5	304 stainless steel	drilled	860
39-1-3630	304 stainless steel	raw	1995	31.5	1	2	30	7.5	60	20	3.5	304 stainless steel	drilled	860

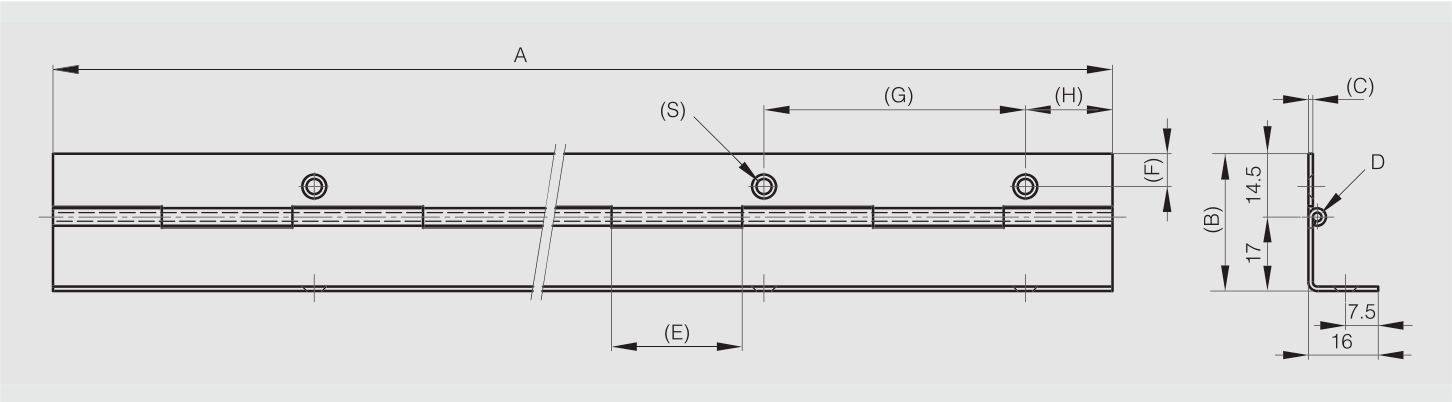

Undrilled continuous hinge with one cranked leaf

Opening angle 270°. Other lengths and pin materials are available on request.
Specific drilling requirements are also available on request.

Part number	Material	Finish	A	B	C	D	E	Pin material	Note	Weight (g)
39-1-3632	steel	zinc plated	1995	44	1.5	3	25	304 stainless steel	undrilled	1756
39-1-3633	304 stainless steel	raw	1995	44	1.5	3	25	304 stainless steel	undrilled	1859
39-1-3300	430 stainless steel	raw	1600	44	1.5	3	25	304 stainless steel	undrilled	1430

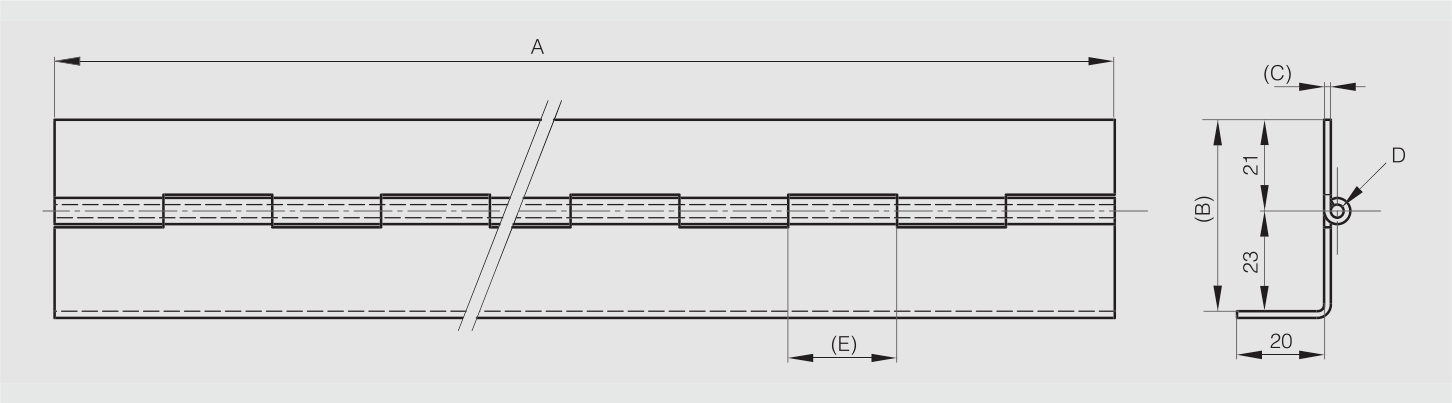

Continuous hinge with two cranked leaves

270° STAINLESS STEEL STEEL RoHS

Opening angle 270°. Other lengths and pin materials are available on request.
Specific drilling requirements are also available on request.

Part number	Material	Finish	A	B	C	D	E	Pin material	Note	Weight (g)
39-1-3634	steel	zinc plated	1995	46	1.5	3	25	304 stainless steel	undrilled	1910
39-1-3635	304 stainless steel	raw	2000	46	1.5	3	25	304 stainless steel	undrilled	1944

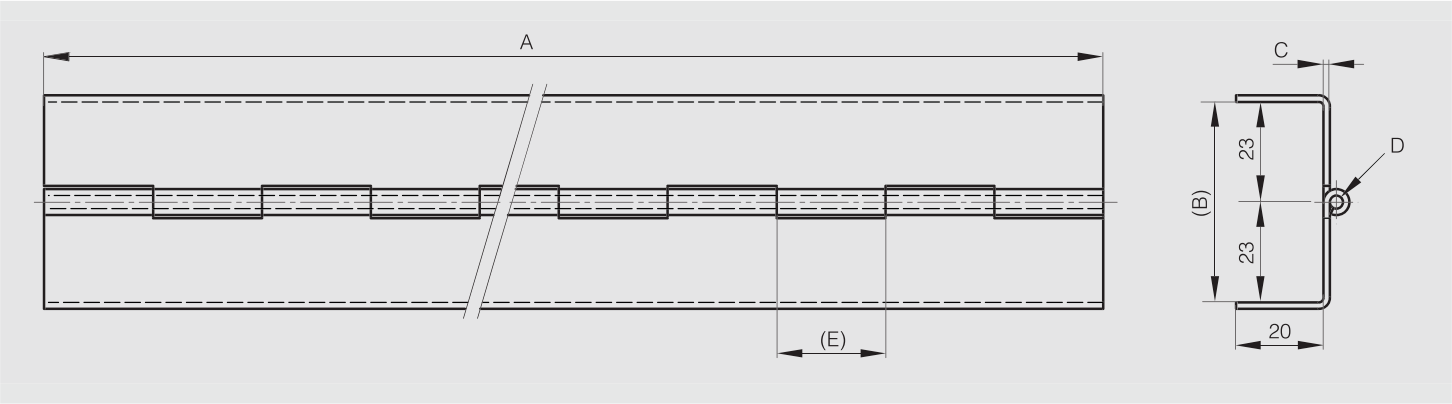

Rolled knuckle continuous hinge “Imperial” dimension

270° STAINLESS STEEL RoHS

Part number	Material	Finish	A	B	C	D	E	Pin material	Note	Weight (g)
42-1-4089 UK	304 stainless steel	raw	6’	1″ 1/4	0.04″	0.08″	5/8″	stainless steel	undrilled	500
42-1-4094 UK	304 stainless steel	raw	7’	3″	1/16″	5/32″	5/8″	stainless steel	undrilled	2400
42-1-4095 UK	304 stainless steel	raw	7’	5″	0.08″	1/4″	1″ 1/4	stainless steel	undrilled	5000
42-1-4096 UK	304 stainless steel	raw	6’	1″	0.04″	0.08″	5/8″	stainless steel	undrilled	500
42-1-4097 UK	304 stainless steel	raw	6’	2″ 3/4	1/16″	5/32″	5/8″	stainless steel	undrilled	1900
42-1-4219 UK	304 stainless steel	raw	6’	2″	1/16″	5/32″	5/8″	stainless steel	undrilled	1500
42-1-4220 UK	304 stainless steel	raw	7’	2″ 1/4	1/16″	5/32″	5/8″	stainless steel	undrilled	2000
42-1-4221 UK	304 stainless steel	raw	6’	2″ 1/2	1/16″	5/32″	5/8″	stainless steel	undrilled	1800
42-1-4346 UK	304 stainless steel	raw	6’	1″ 1/4	3/64″	1/8″	3/4″	stainless steel	undrilled	810
42-1-4347 UK	304 stainless steel	raw	6’	1″ 1/2	3/64″	1/8″	3/4″	stainless steel	undrilled	940
42-1-4348 UK	304 stainless steel	raw	6’	2″	3/64″	1/8″	3/4″	stainless steel	undrilled	1112

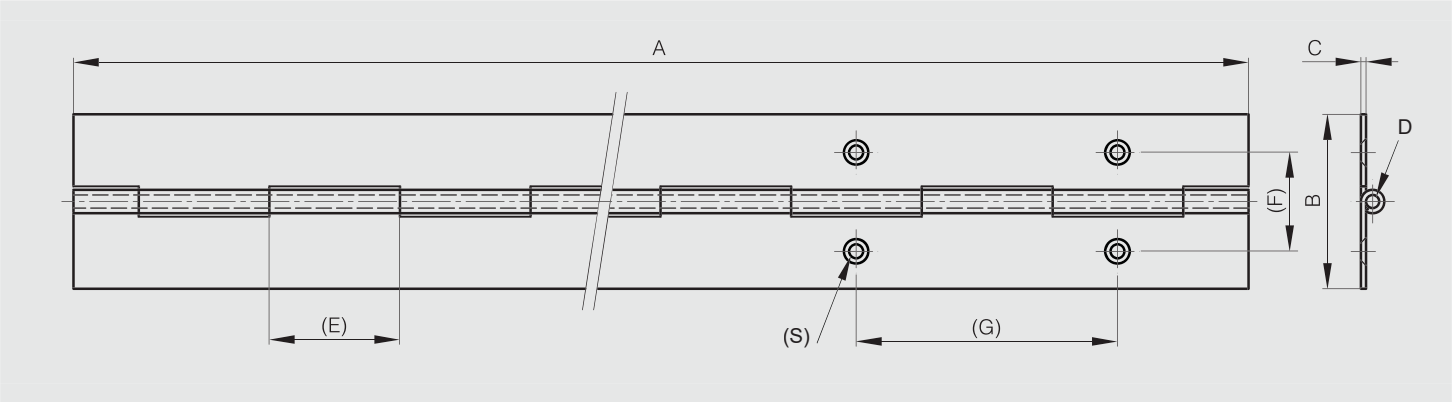

Double knuckle continuous hinge

180° ALU RoHS

Hinge in aluminium profile for 180° opening angle.
Delivered without watertight gasket (to be ordered separately).
With fixed friction washers.
Non-drilled hinges.

Part number	Material	Finish	A	D	K	Pin material	Weight (g)
73-1-3520	6060 T5 alu	clear anodised	2000	5	65	304 stainless steel	2500
73-1-3521	6060 T5 alu	clear anodised	2500	5	15	304 stainless steel	3140
73-1-3522	6060 T5 alu	clear anodised	3000	5	115	304 stainless steel	3780

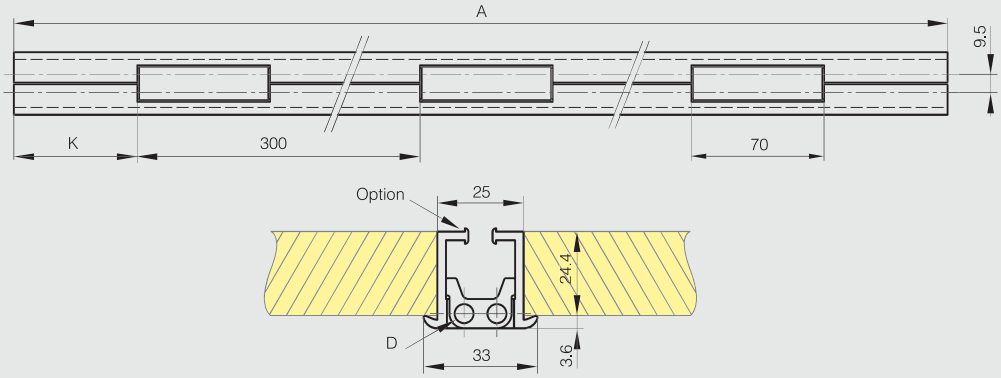

Seal gasket for double knuckle continuous hinge

POLYMER RoHS

Gasket made of soft rubber with a steel clip-on core and foam rubber.

Part number	Material	A	Weight (g)
27-1-3816	reinforced rubber profile	2000	235
27-1-3817	reinforced rubber profile	2500	317
27-1-3818	reinforced rubber profile	3000	405

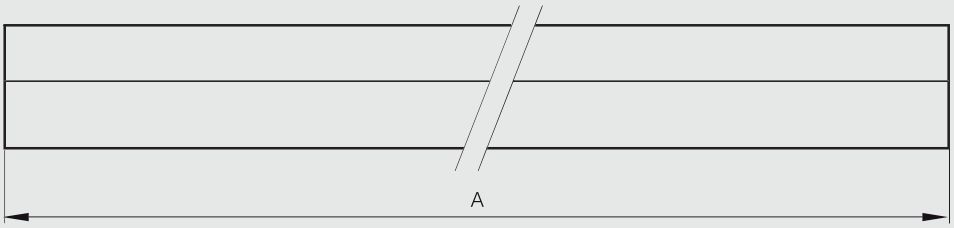

Humidity drain gasket

Moisture collector to be positionned on the floor in line with the double knuckle hinge (when closed).

POLYMER RoHS

Part number	Material	A	B	Weight (g)
99-7-3691	polyurethane	27.6	21	4

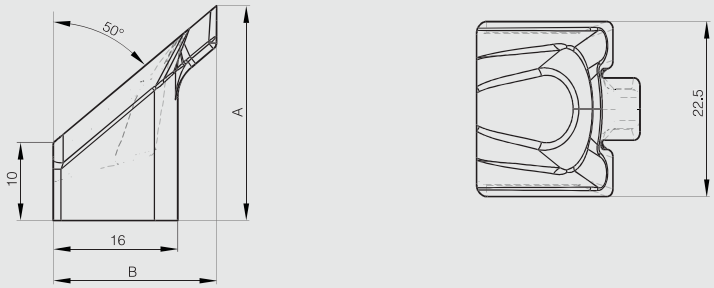

Concealed hinges A - 120° opening

120° STAINLESS STEEL STEEL RoHS

Zinc plated steel version: small flat side in raw steel.
Natural POM pin diameter 6.
For pin with groove, optimal use of circlips DIN 6799 RS4 or O-ring 99-7-3723 (on request).
Produced mainly in stainless steel, for a complete description of the materials contact us.

Part number	Material	Finish	A	C	D	Pin material	Weight (g)
60-1-3760	steel	zinc plated	60	2.5	6	zinc plated pin	99
60-1-3779	steel	zinc plated	60	2.5	6	zinc plated grooved pin	100
60-1-3761	steel	zinc plated	60	2.5	6	Delrin POM pin	85
62-1-3570	304 stainless steel	raw	60	2.5	6	304 stainless steel pin	99
62-1-3584	304 stainless steel	raw	60	2.5	6	303 stainless steel grooved pin	98
62-1-3571	304 stainless steel	raw	60	2.5	6	Delrin POM pin	85

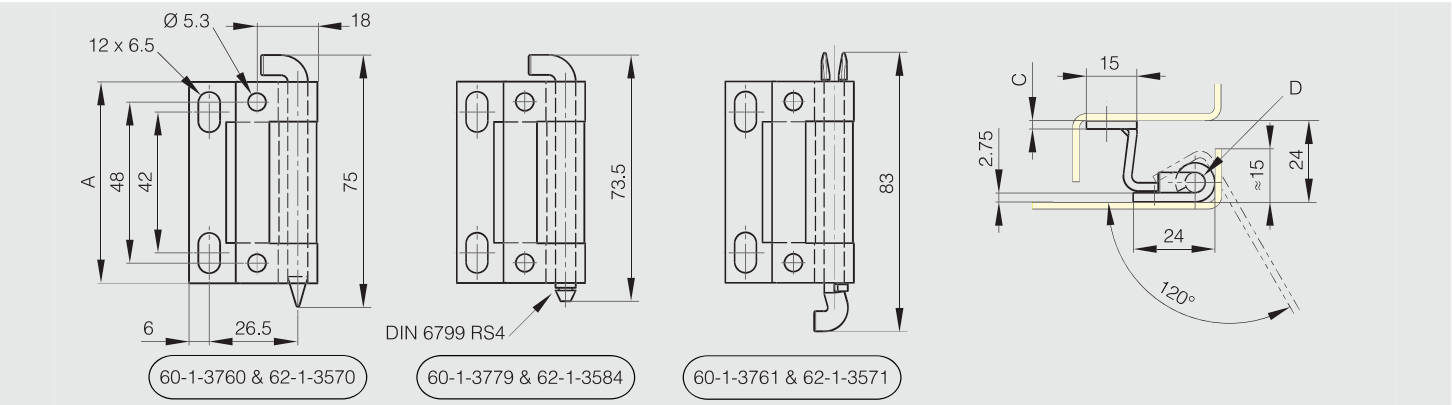

Concealed hinges B - 120° opening

120° STAINLESS STEEL STEEL RoHS

Zinc plated steel version: small flat side in raw steel.
Natural POM pin diameter 6.
For pin with groove, optimal use of circlips DIN 6799 RS4 or O-ring 99-7-3723 (on request).
Produced mainly in stainless steel, for a complete description of the materials contact us.

Part number	Material	Finish	A	C	D	Pin material	Weight (g)
60-1-3762	steel	zinc plated	60	2.5	6	zinc plated pin	93
60-1-3778	steel	zinc plated	60	2.5	6	zinc plated grooved pin	92
60-1-3763	steel	zinc plated	60	2.5	6	Delrin POM pin	79
62-1-3572	304 stainless steel	raw	60	2.5	6	304 stainless steel pin	91
62-1-3585	304 stainless steel	raw	60	2.5	6	303 stainless steel grooved pin	91
62-1-3573	304 stainless steel	raw	60	2.5	6	Delrin POM pin	75

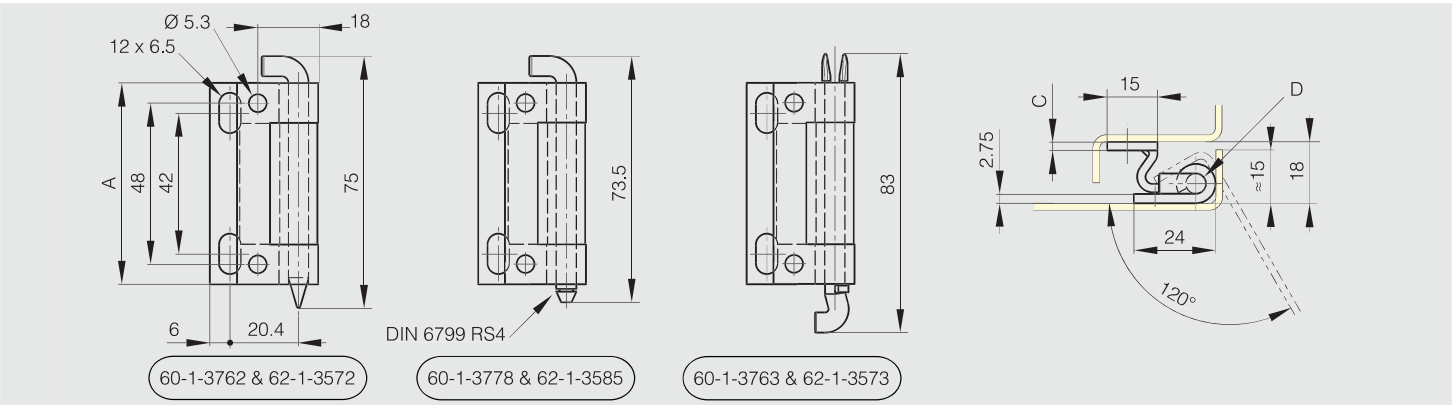

Concealed hinge with removable pin - 110° opening

110° STEEL RoHS

Male leaf in raw steel.
Female leaf in zinc plated steel with stud.
Removable pin in POM.

Part number	Material	Finish	A	B	C	Pin material	Note	Weight (g)
60-1-3918	steel	raw / zinc plated	50	18	1.5	POM pin	male leaf in raw steel	42

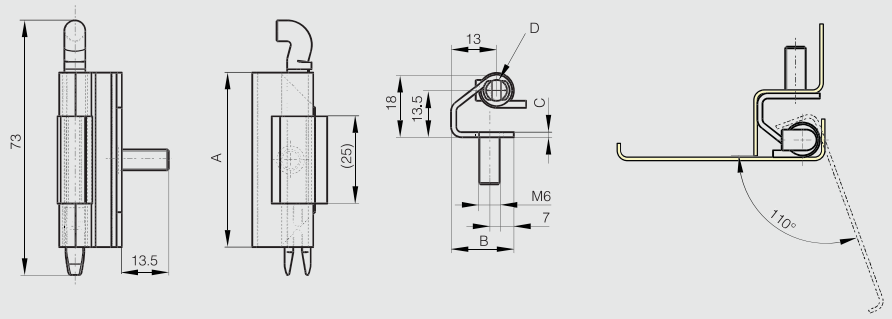

Concealed hinges with retractable pin

120° STAINLESS STEEL RoHS

Quick-release concealed hinge for tool-free door removal with fixed retractable pin.

Part number	Material	Finish	A	B	E	W	Weight (g)
62-1-9000	304 stainless steel	raw	126	17.5	3	122°	95
62-1-9001	304 stainless steel	raw	126	20.5	4	117°	102
62-1-9002	304 stainless steel	raw	126	23.9	4.5	112°	105

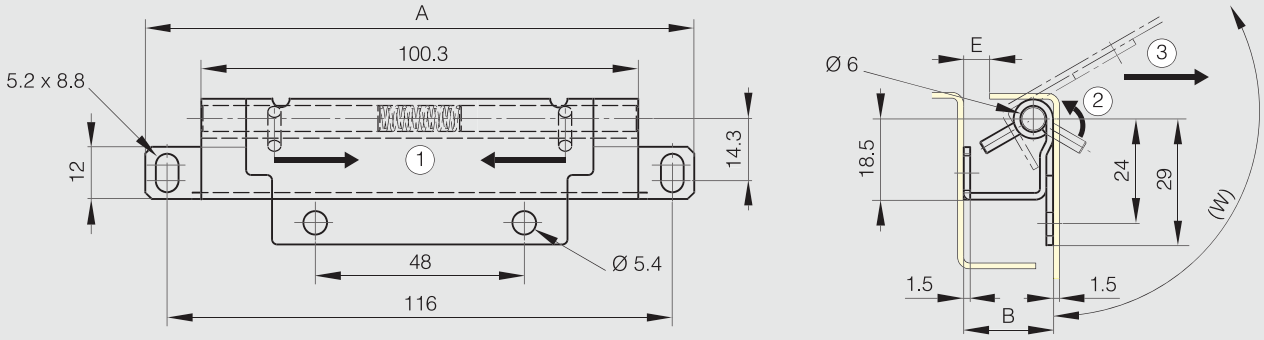

Concealed pin hinges - 100° opening

100° STAINLESS STEEL STEEL RoHS

Non handed fitting.
Removable pin in 304 stainless steel.

Part number	Material	Finish	A	C	D	E	Weight (g)
12-1-3537	steel	raw	80	2	4	40	45
12-1-3538	304 stainless steel	raw	80	2	4	40	45

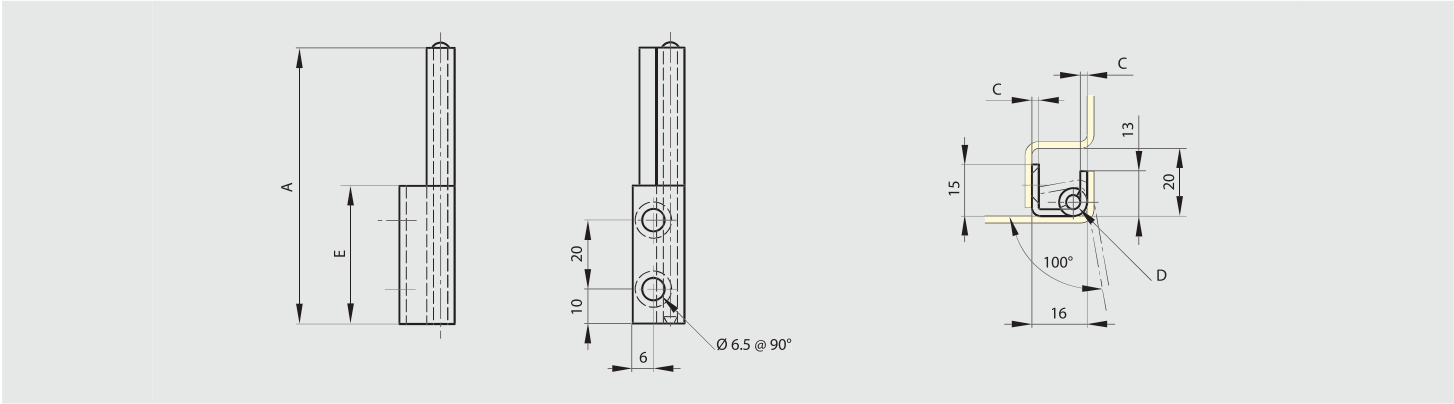

Concealed pin hinges - 120° opening

120° STAINLESS STEEL STEEL RoHS

Non handed fitting.
Removable pin in 304 stainless steel.

Part number	Material	Finish	A	C	D	E	Weight (g)
12-1-3524	steel	raw	80	3	6	40	107
12-1-3528	304 stainless steel	raw	80	3	6	40	107

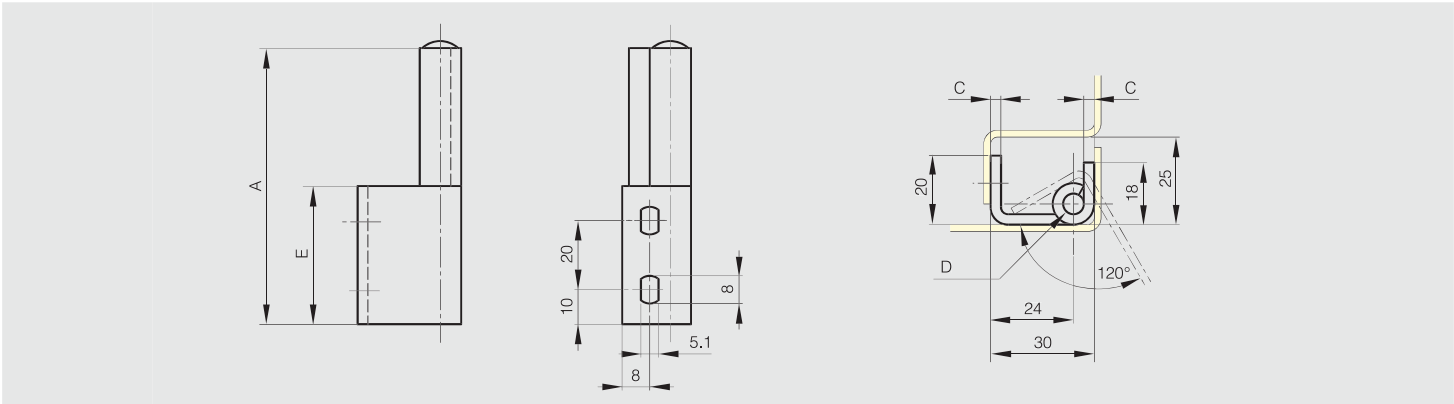

Concealed hinges with spring - 95° opening

90° STAINLESS STEEL STEEL RoHS

Concealed hinges with 2 positions:
- Rest position: door remains open with an angle of 10°.
- Opened position: door opens up to 95°.

Closing of door due to spring action and door remains slightly opened.
Applications for parcel box:
- Door automatically opens after code entry.
- Door doesn't remain in opened position.

Part number	Material	Finish	A	B	C	D	Weight (g)
71-1-3812	steel	zinc plated	51	75	3	6	200
71-1-3867	304 stainless steel	raw	51	75	3	6	200

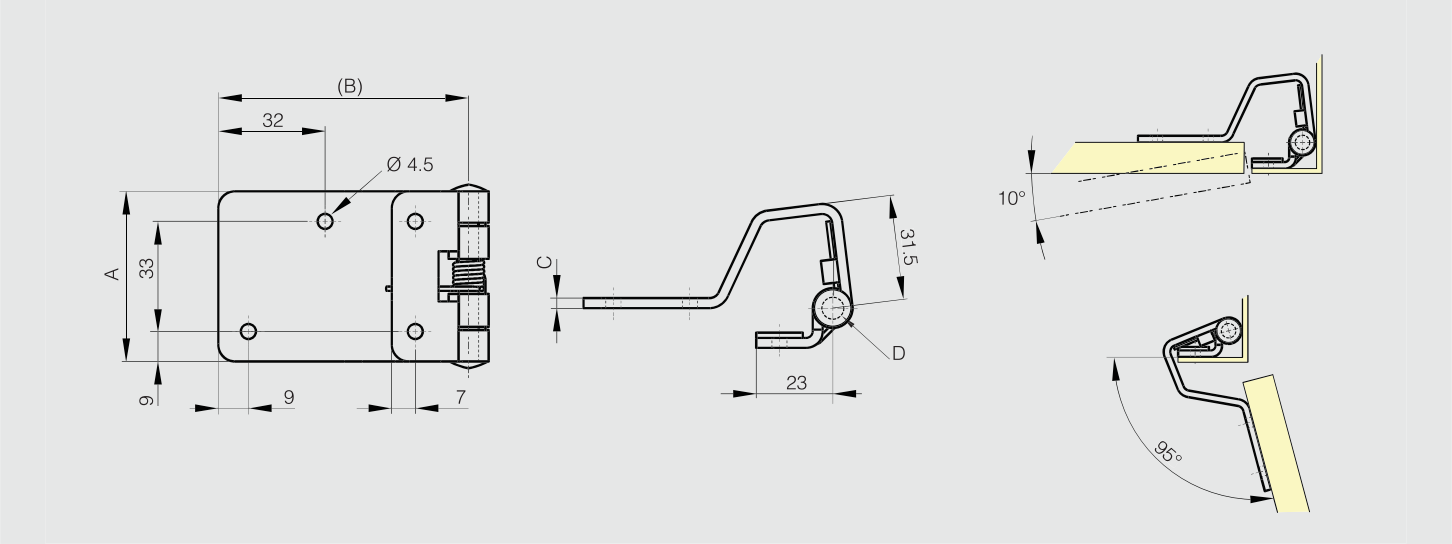

Concealed hinges without spring - 95° opening

90° STAINLESS STEEL STEEL RoHS

Part number	Material	Finish	A	B	C	D	Weight (g)
60-1-4007	steel	zinc plated	51	75	3	6	210
62-1-4008	304 stainless steel	raw	51	75	3	6	210

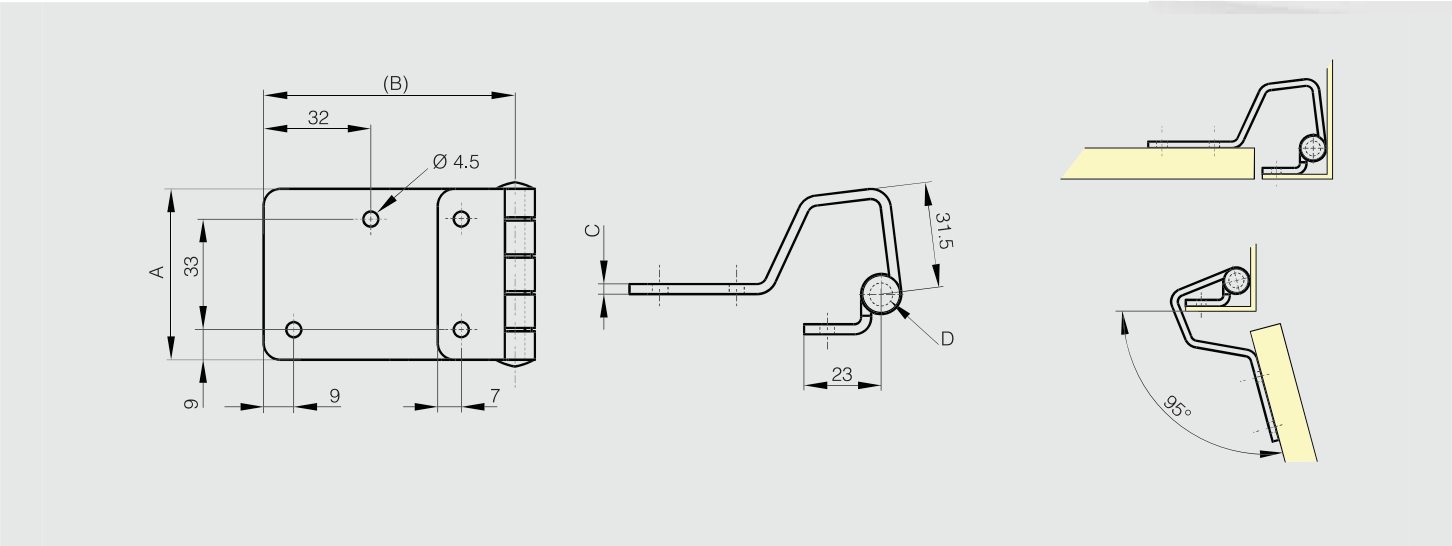

Concealed hinge with friction - 90° opening

90° STAINLESS STEEL RoHS

Initial torque (0.7 N.m) may vary from -20% to +40%.
For indoor use only.
Can be used both for horizontal and vertical applications.
Cycle life: 20,000 cycles.
Produced mainly in stainless steel, for a complete description of the materials contact us.

Part number	Material	Finish	A	B	C	Torque	Weight (g)
70-7-3623	304 stainless steel	polished	40	67	29.5	0.7 N.m	51

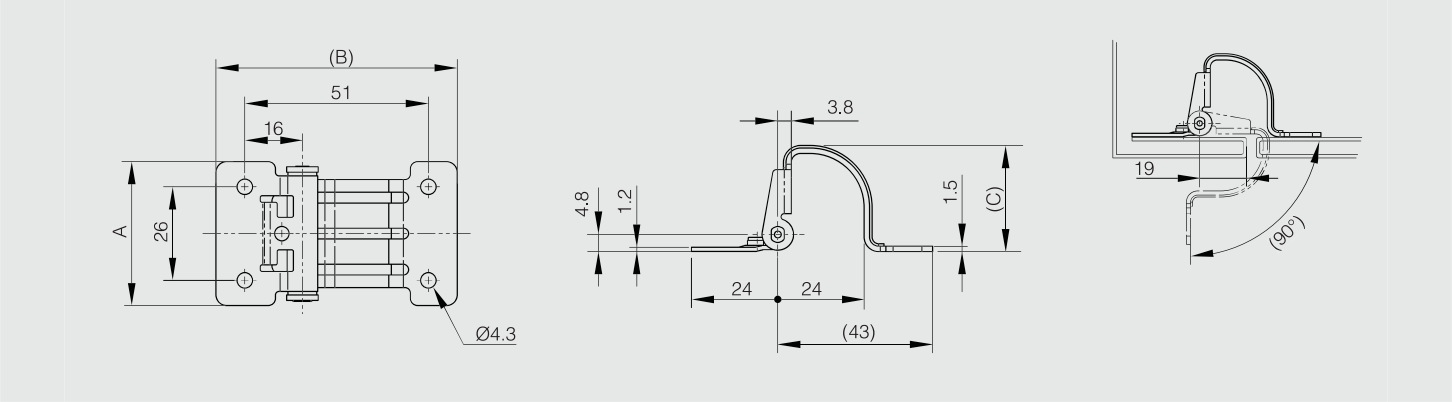

Concealed hinge with friction - 130° opening

NEW

130° STAINLESS STEEL RoHS

Initial torque (0.7 N.m) may vary from -20% to +40%.
For indoor use only.
Can be used both for horizontal and vertical applications.
Cycle life: 20,000 cycles.
Pin: 303 stainless steel
Produced mainly in stainless steel, for a complete description of the materials contact us.

	Part number	Material	Finish	A	B	C	Torque	Weight (g)
NEW	70-7-3658	304 stainless steel	polished	40	61	30	0.7 N.m	88

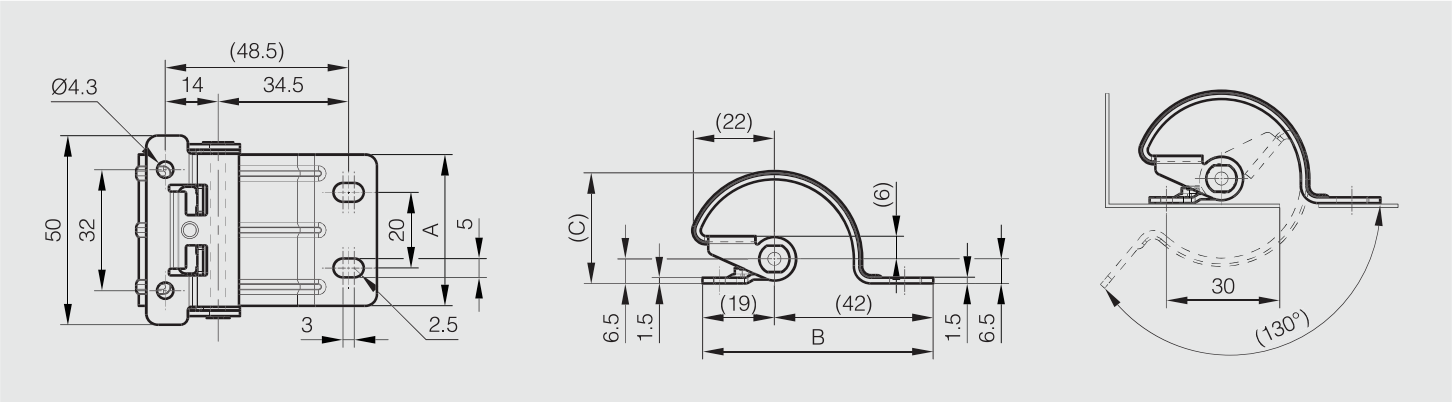

Concealed hinge - 180° opening

180° STAINLESS STEEL RoHS

Part number	Material	Finish	A	B	C	D	E	F	S	Weight (g)
70-7-3544	304 stainless steel	satin	50	19	38	14	18.2	11	2.7	33

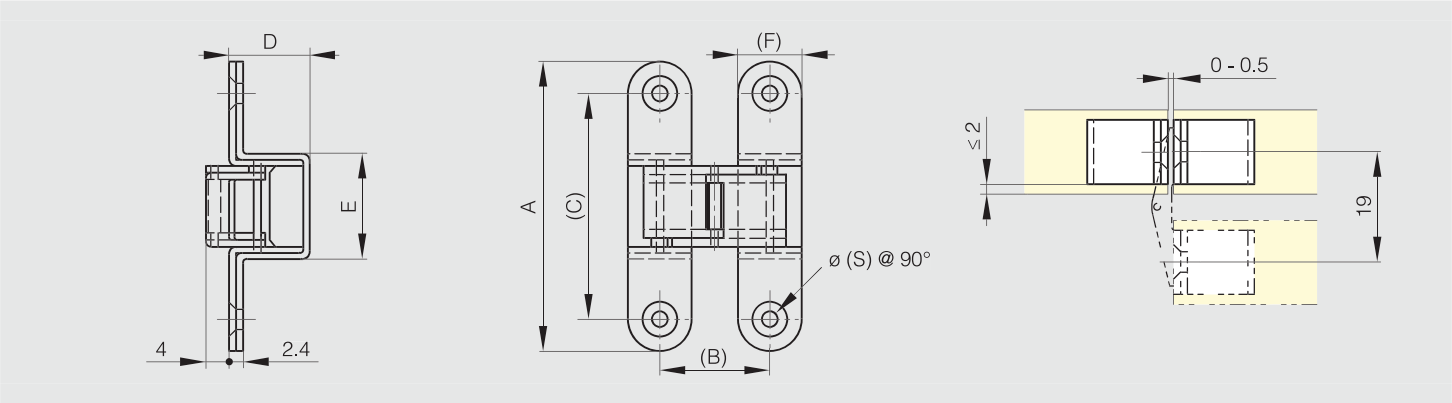

Multi link concealed hinges - 180° opening

Links and pins: 303 and 304 stainless steel or steel.

180° ZAMAK

Part number	Material	Finish	A	B	C	D	E	F	G	H	S	X	Y	Weight (g)
70-7-3539	zinc die-cast	chrome plated satin	43	18	32	13	11	22	5	5	3.5	≤ 2.3	0.8	37
70-7-3540	zinc die-cast	chrome plated satin	45	22.7	32	18.5	13	19	5	6	3.5	≤ 3	0.8	55
70-7-3541	zinc die-cast	chrome plated satin	60	22.2	47	18.5	13	33	6.5	6.5	4.3	≤ 3	1	103
70-7-3542	zinc die-cast	chrome plated satin	70	26.6	53	23	16.1	35	7	9	4.6	≤ 3.5	1.2	167
70-7-3543	zinc die-cast	chrome plated satin	100	33.2	80	27.5	20	52	9.5	9.5	5.3	≤ 4.8	1.8	350

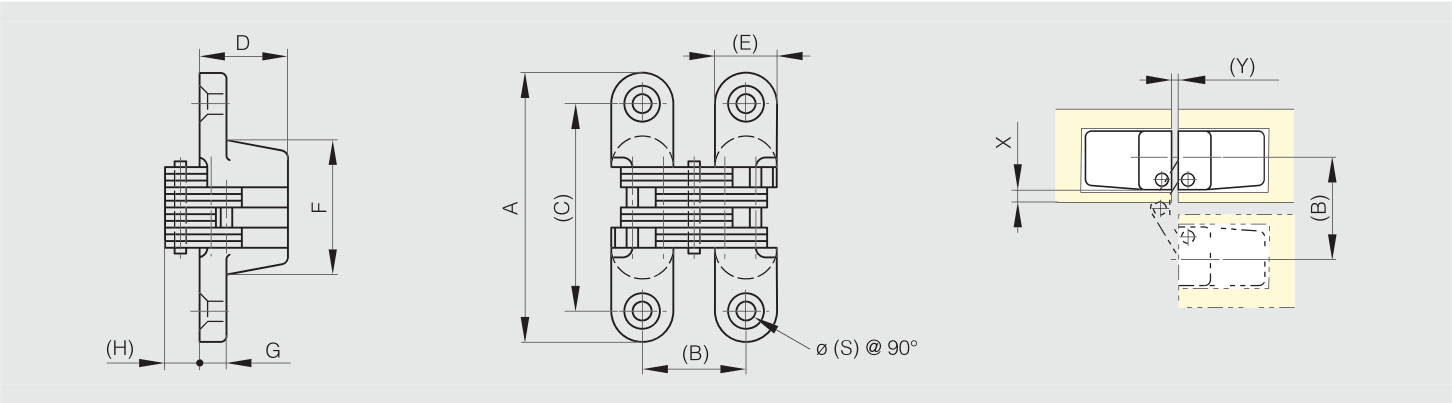

Concealed hinges for nested doors only

3-way adjustable concealed hinge

NEW

180° ZAMAK RoHS

3-way adjustment function allows vertical, horizontal and depth adjustment after hinge installation.
Can be split into two parts (one for the frame and one for the door) making installation easy.
Horizontal adjustment: ±1.5 mm
Vertical adjustment: ±1.5 mm
Depth adjustment: ±1 mm
Door thickness: min. 23 mm
4 screws included.

	Part number	Material	Finish	A	B	C	Weight (g)
NEW	70-7-3660	zinc die cast	silver	90	18	16	195

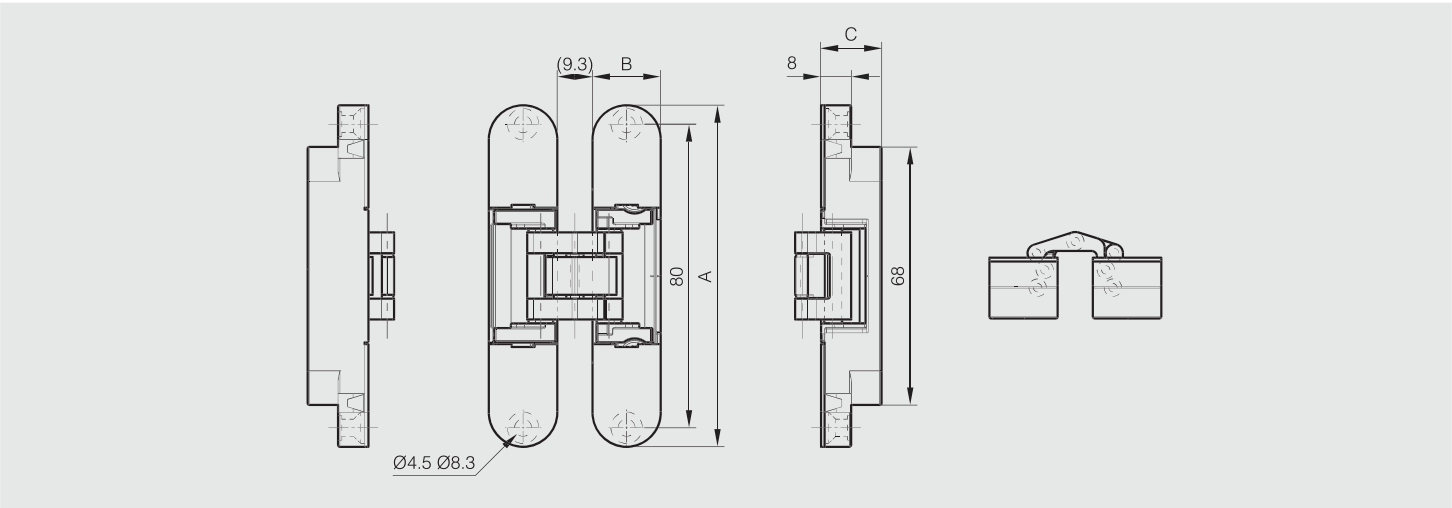

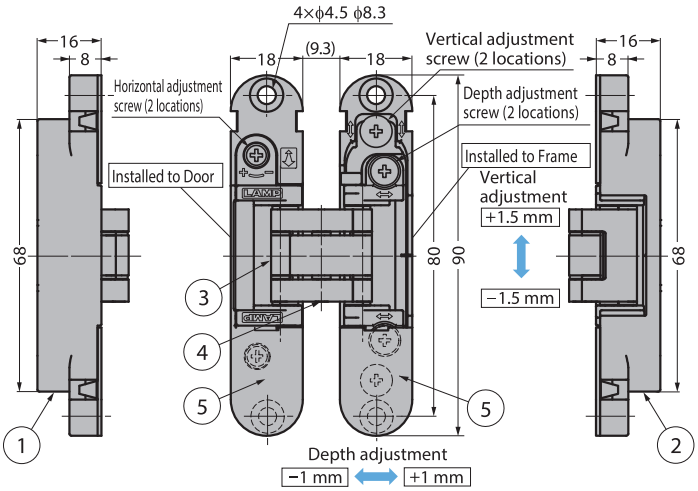

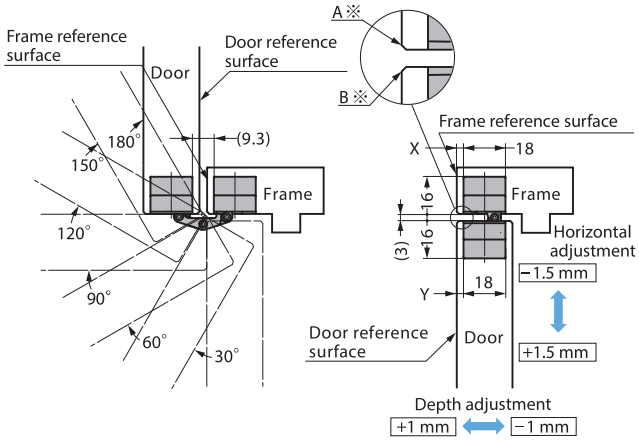

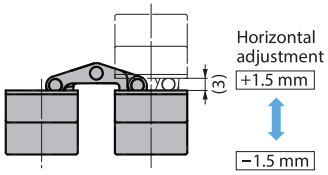

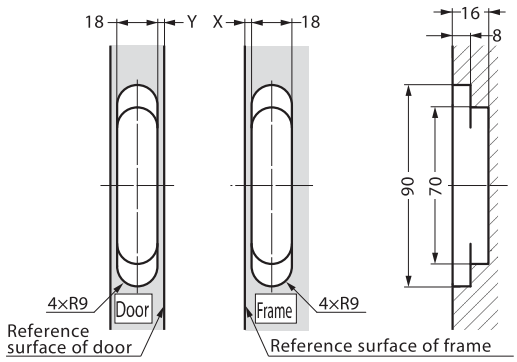

Concealed hinge with friction - 180° opening

180° ZAMAK RoHS

180° opening angle.
Free stop for safety. Maximum friction torque of 5 N.m for one hinge (when lid is closed).
Torque decreases as the opening angle increases, making easier to open the lid.

Part number	Material	Finish	A	B	C	S	Weight (g)
70-7-3635	zinc die-cast	satin chrome	70	31.6	53	4.6	208

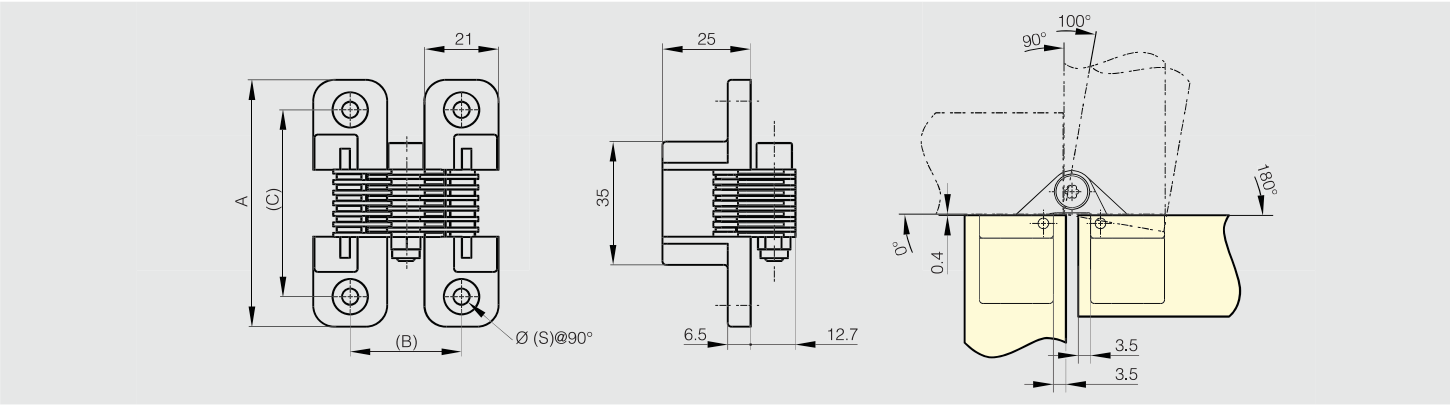

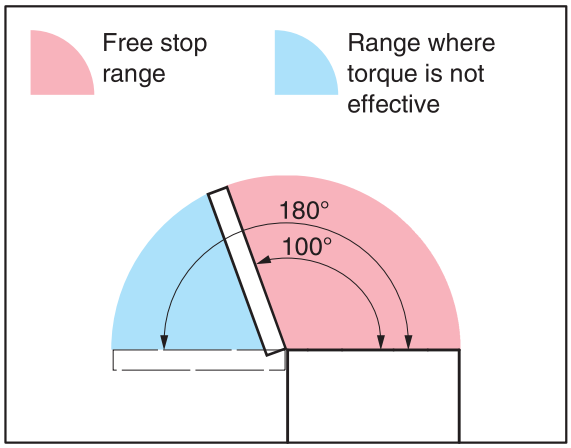

Install stopper to hold the door within the range where torque is not effective.

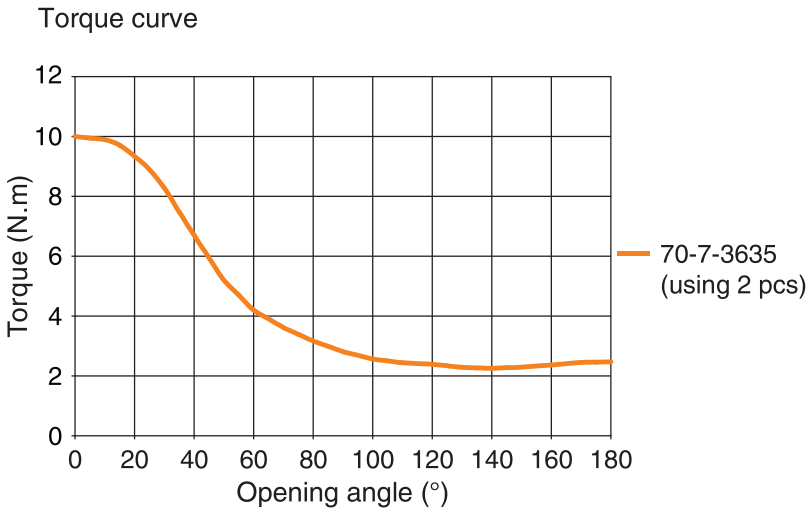

Concealed hinge with removable pin - 180° opening

Patented concealed hinge for metallic enclosures with a 180° opening.
Removable pin makes disassembly of doors easy.
Door thickness max: 1 mm.

Part number	Material	Finish	A	Weight (g)
73-1-3504	steel	raw	100	123

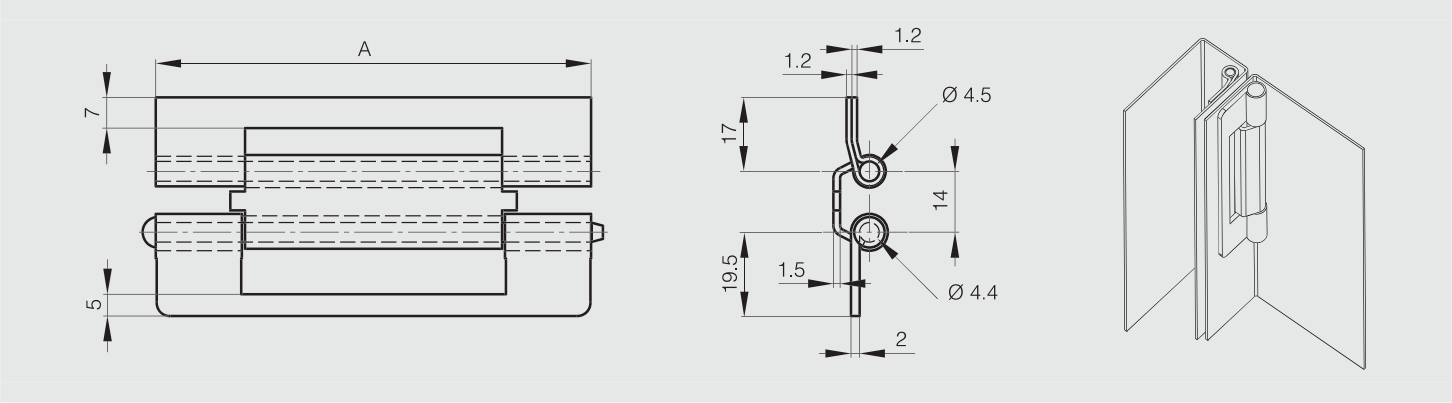

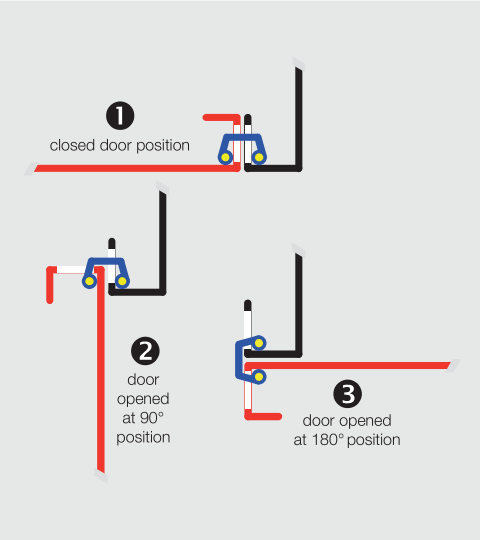

Operating of the 180° concealed hinge

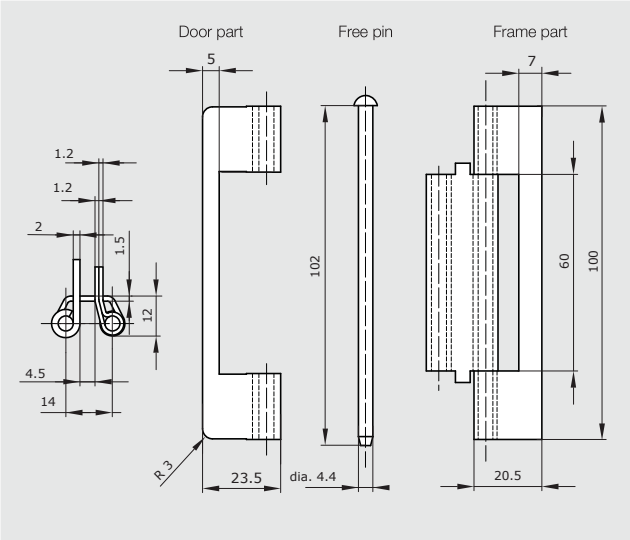

Dimensions of the 180° concealed hinge

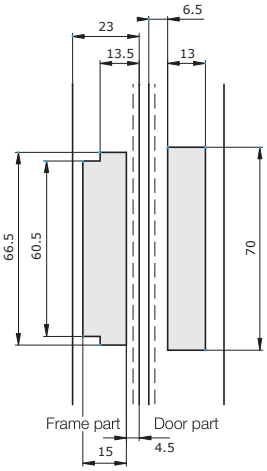

Cut-out to be made for hinge fitting

Long concealed spring hinges - 180 ° opening

NEW

180° STAINLESS STEEL STEEL RoHS

Patented concealed hinge 180° opening with double axis for sheet metal applications.
The springs make it possible to prioritize the 2 axis in order to have an adapted door movement.

Stainless steel pins and springs.

	Part number	Material	Finish	A	B	C	D	E	F	G	H	K	L	S	Weight (g)
NEW	40-1-4843	steel	zinc plated	500	90	3	6	30	71.4	60	49	68	10	6.6	3300
NEW	42-1-4612	304 stainless steel	raw	500	90	3	6	30	71.4	60	49	68	10	6.6	3300

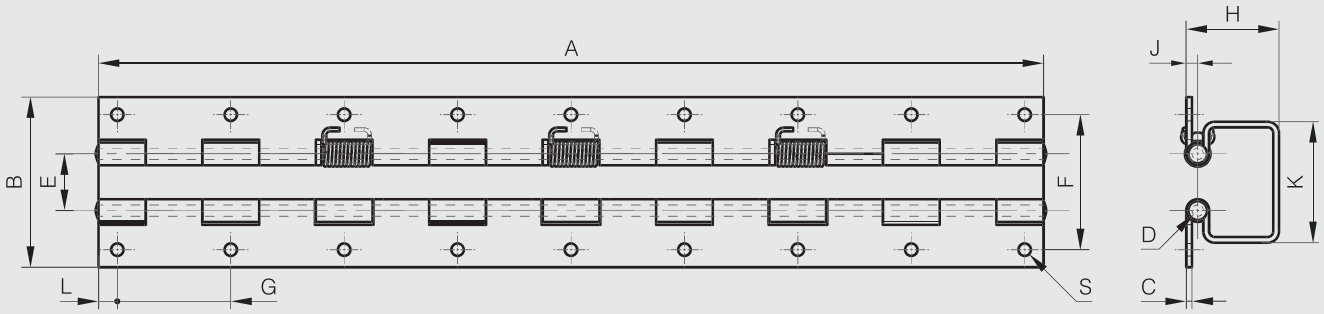

Concealed heavy duty hinge for flush doors - 90° opening

90° STAINLESS STEEL STEEL RoHS

Concealed hinge for LH or RH application. The 2 main hinge parts have a central guide to prevent door from sagging during adjustement.

Part number	Material	Finish	A	B	C	D	Weight (g)
85-7-1321	steel	raw / zinc plated	60	48	3	6	189
85-7-2331	304 stainless steel	raw	60	48	3	6	189

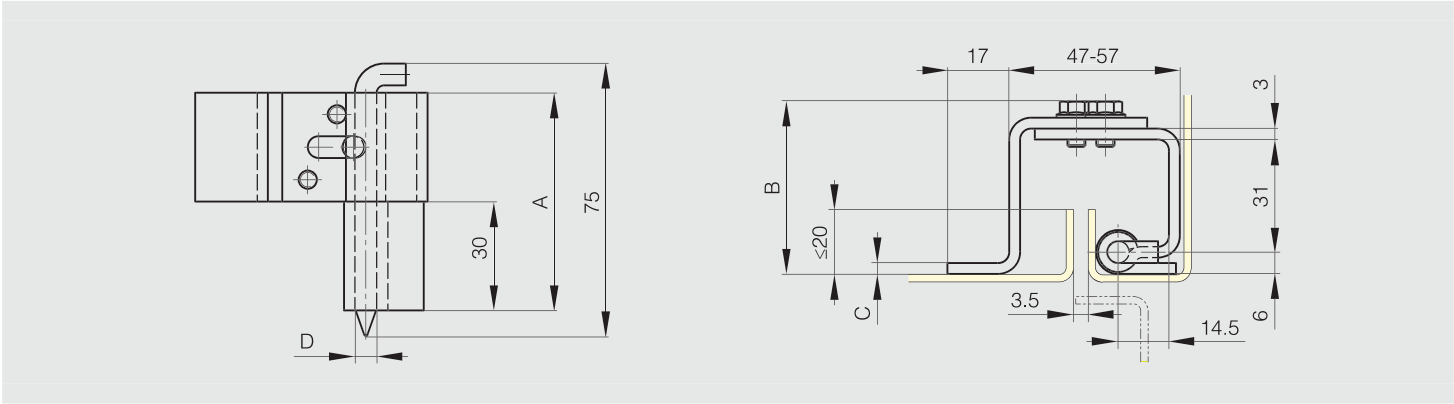

Concealed heavy duty hinge for flush doors - 90° opening

90° STAINLESS STEEL STEEL RoHS

Concealed hinge for LH or RH application. The 2 main hinge parts have a central guide to prevent door from sagging during adjustement.

Part number	Material	Finish	A	B	C	D	Weight (g)
85-7-1333	steel	raw / zinc plated	80	62	4	8	430
85-7-2334	304 stainless steel	raw	80	62	4	8	427

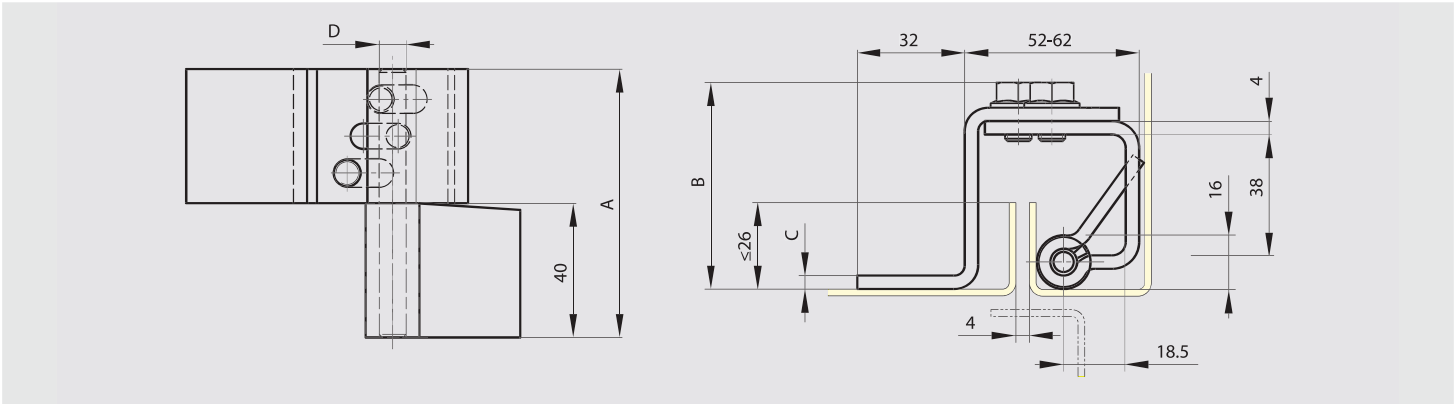

Concealed heavy duty hinge for flush doors - 90° opening

90° STAINLESS STEEL STEEL RoHS

Concealed hinge for LH or RH application. The 2 main hinge parts have a central guide to prevent door from sagging during adjustement.

Part number	Material	Finish	A	B	C	D	Weight (g)
85-7-1331	steel	raw / zinc plated	80	61	4	8	412
85-7-2332	304 stainless steel	raw	80	61	4	8	412

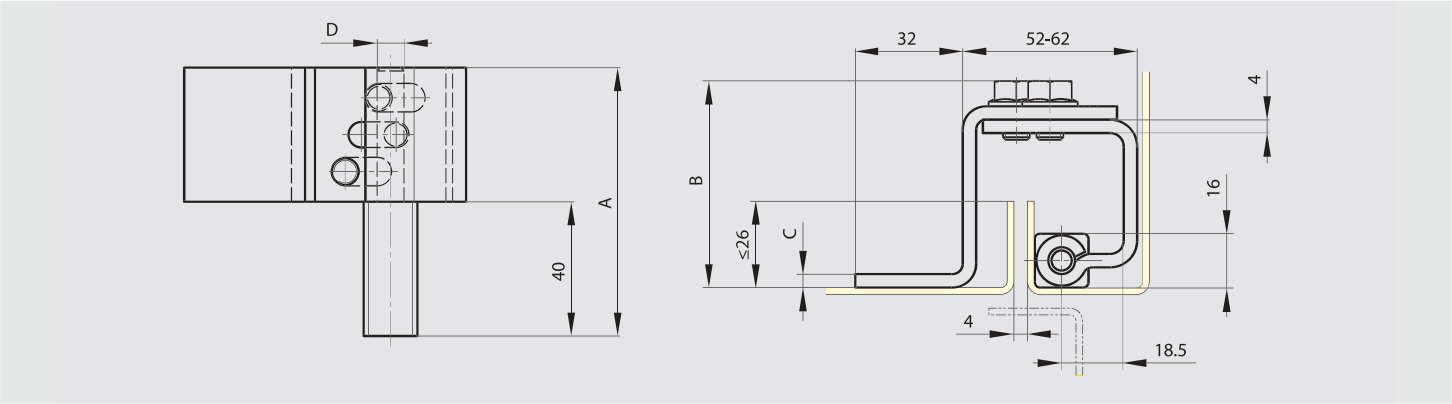

Concealed weld-on springloaded pin hinge

110° STEEL RoHS

Part number	Material	Finish	A	B	K	Weight (g)
85-7-1030	steel	raw	53	15	15	70

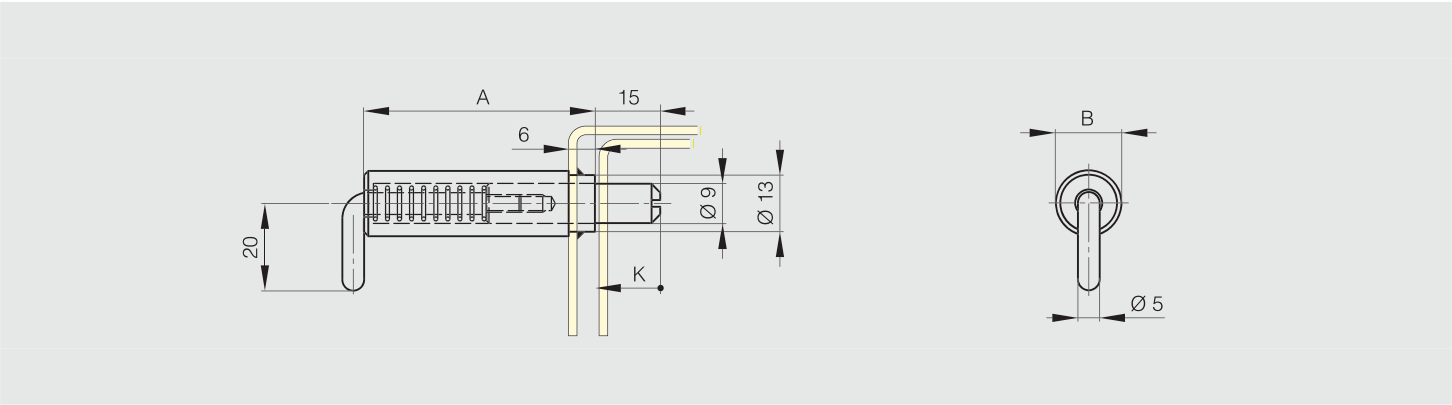

Concealed hinges for nested doors only

Concealed springloaded pin hinges A

STAINLESS STEEL STEEL RoHS

Stainless steel spring.
Hinges in raw steel and zinc plated steel with a zinc plated pin.
304 stainless steel pin for hinges in stainless steel.
Circlip in 1.4122 stainless steel.

Part number	Material	Finish	A	B	C	D	K	Note	Weight (g)
12-1-3856	steel	raw	82	18.2	2.8	6	12	type 2	46
12-1-3857	steel	raw	82	18.2	2.8	6	12	type 1	46
12-1-3854	steel	zinc plated	82	18.2	2.8	6	12	type 2	46
12-1-3855	steel	zinc plated	82	18.2	2.8	6	12	type 1	46
12-1-3858	304 stainless steel	raw	82	18.2	2.8	6	12	type 2	46
12-1-3859	304 stainless steel	raw	82	18.2	2.8	6	12	type 1	46

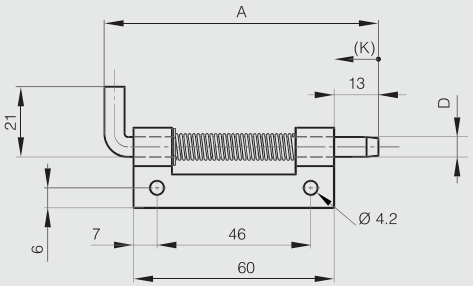

12-1-3857 & 12-1-3855 & 12-1-3859

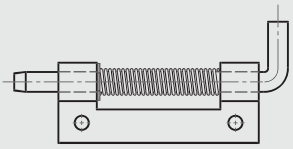

12-1-3856 & 12-1-3854 & 12-1-3858

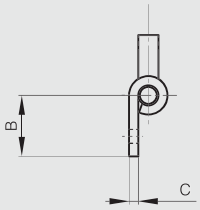

Concealed springloaded pin hinges B

STAINLESS STEEL STEEL RoHS

Stainless steel spring.
Zinc plated pin for hinges in raw steel and zinc plated steel.
304 stainless steel pin for hinges in stainless steel.
Circlip in 1.4122 stainless steel.

Part number	Material	Finish	A	B	C	D	K	Note	Weight (g)
12-1-3950	steel	raw	82	21	14	5	12	type 2	39
12-1-3951	steel	raw	82	21	14	5	12	type 1	39
12-1-3860	steel	zinc plated	82	21	14	5	12	type 2	39
12-1-3861	steel	zinc plated	82	21	14	5	12	type 1	39
12-1-3862	304 stainless steel	raw	82	21	14	5	12	type 2	39
12-1-3863	304 stainless steel	raw	82	21	14	5	12	type 1	39

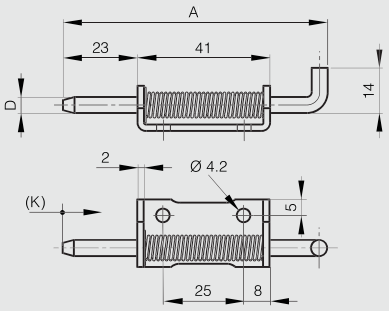

12-1-3951 & 12-1-3861 & 12-1-3863

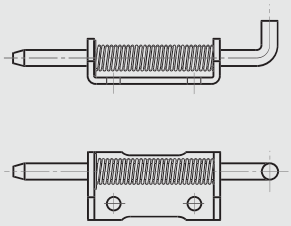

12-1-3950 & 12-1-3860 & 12-1-3862

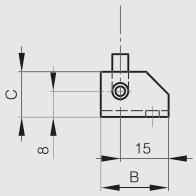

Concealed hinge A - 90° opening

NEW

90° STAINLESS STEEL STEEL RoHS

Main features:
- For nested doors or surface mounted doors.
- For horizontal applications mainly.
- 90° opening max.

Same installation as «Concealed hinge C - 90° opening».
Door thickness max. 20mm.
Minimal gap of 0.5 to 1.5mm between door and frame.

	Part number	Material	Finish	A	B	Weight (g)
	70-1-3628	steel	zinc plated	30.2	126.5	83
NEW	70-1-3656	304 stainless steel	raw	30.2	126.5	83

Concealed hinge B - 90° opening

NEW

90° STAINLESS STEEL STEEL RoHS

Main features:
- For nested doors or surface mounted doors.
- For horizontal applications mainly.
- 90° opening max.

Same installation as «Concealed hinge C - 90° opening».
Door thickness max. 20mm.
Minimal gap of 0.5 to 1.5mm between door and frame.

	Part number	Material	Finish	A	B	Weight (g)
	70-1-3627	steel	zinc plated	30.2	126.5	83
NEW	70-1-3655	304 stainless steel	raw	30.2	126.5	83

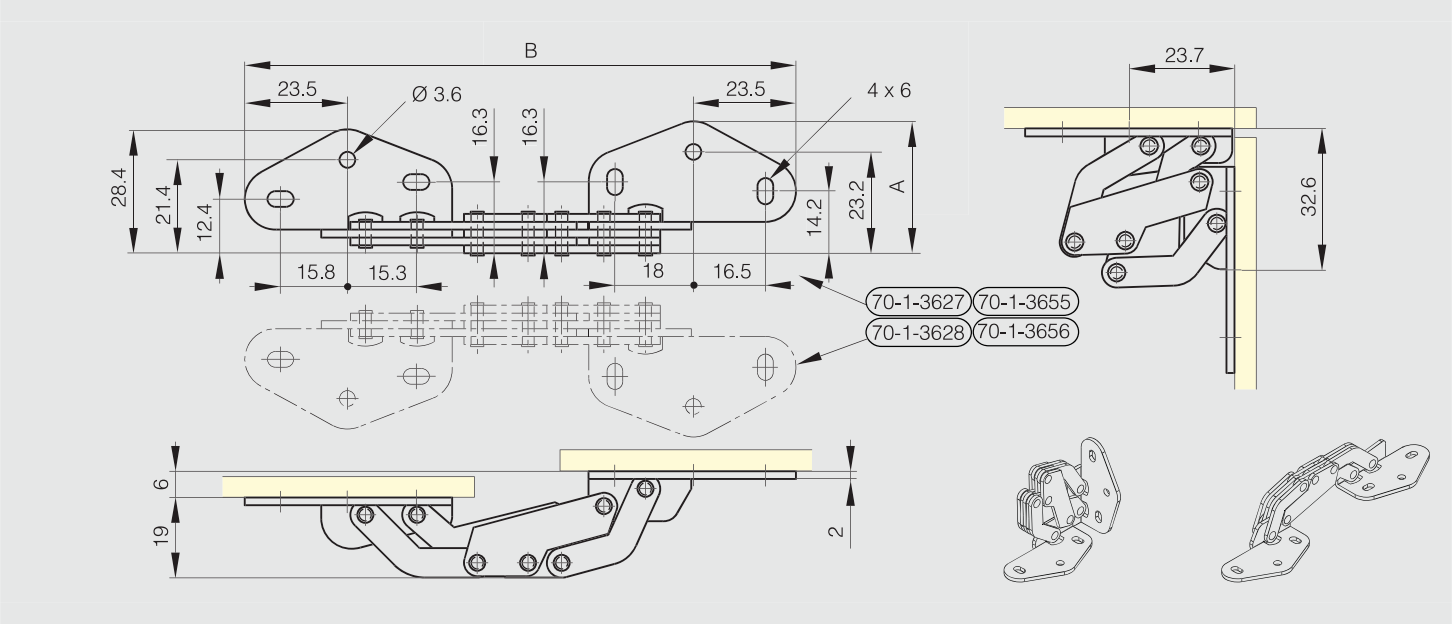

Concealed hinge C - 90° opening

NEW

90° STAINLESS STEEL STEEL RoHS

Main features:
- For nested doors or surface mounted doors.
- For horizontal applications mainly.
- 90° opening max.

Door thickness max. 20mm.
Minimal gap of 0.5 to 1.5mm between door and frame.

	Part number	Material	Finish	A	B	Weight (g)
	70-1-3626	steel	zinc plated	58.6	126.5	160
NEW	70-1-3654	304 stainless steel	raw	58.6	126.5	160

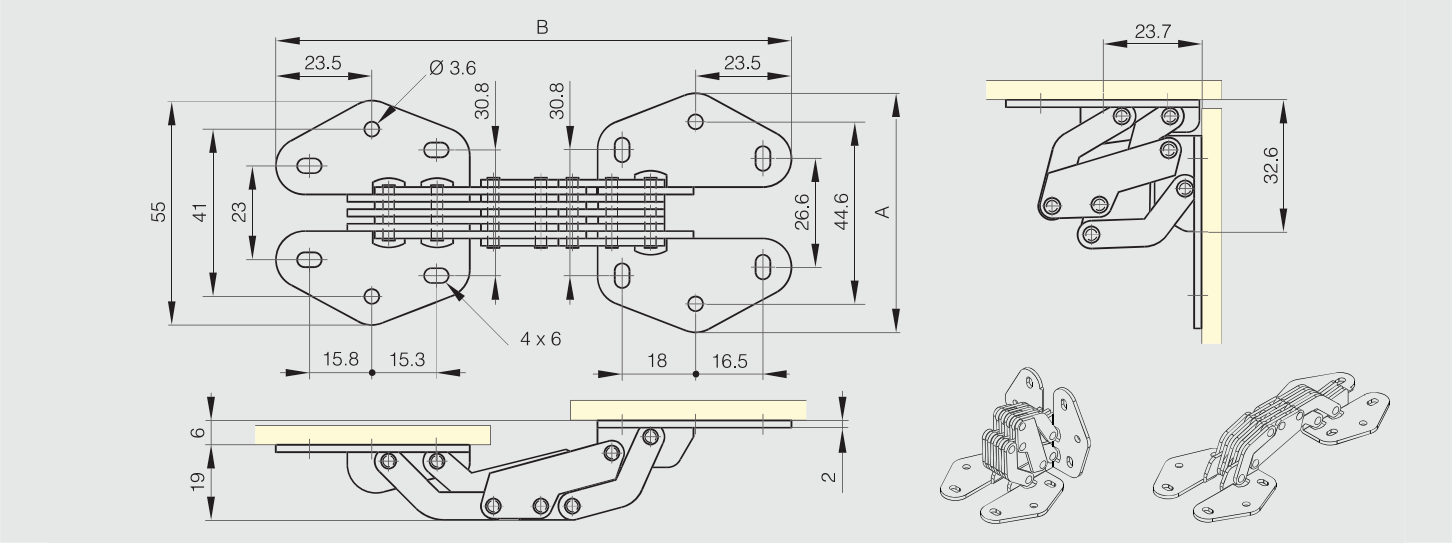

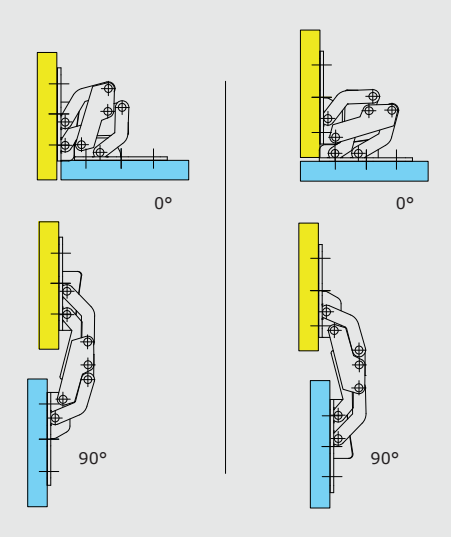

Nested door assembly shown

Surface mounted assembly shown

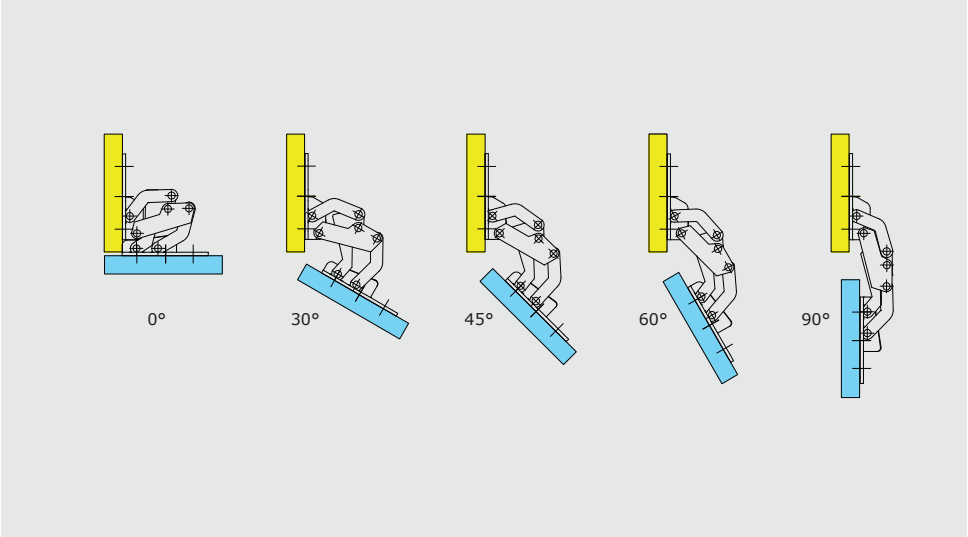

Surface mounted assembly shown

Heavy duty concealed hinge - opening 90°

NEW

90° ACIER RoHS

Heavy duty concealed hinge.
Hinge tested by pairs on a 15 kg vertical application, door 800mm x 600mm.
Cycle life: 10,000 cycles.

Main Features :
- For nested doors or surface mounted doors.
- High resistance to bending and twisting.
- For horizontal or vertical application.
- 90 °opening max.

Door thickness max 20 mm.
Minimal gap of 0.5 to 1.5 mm between frame and door.

	Part number	Material	Finish	A	B	C	Weight (g)
NEW	70-1-3657	steel	zinc plated	101	173.4	74.3	67

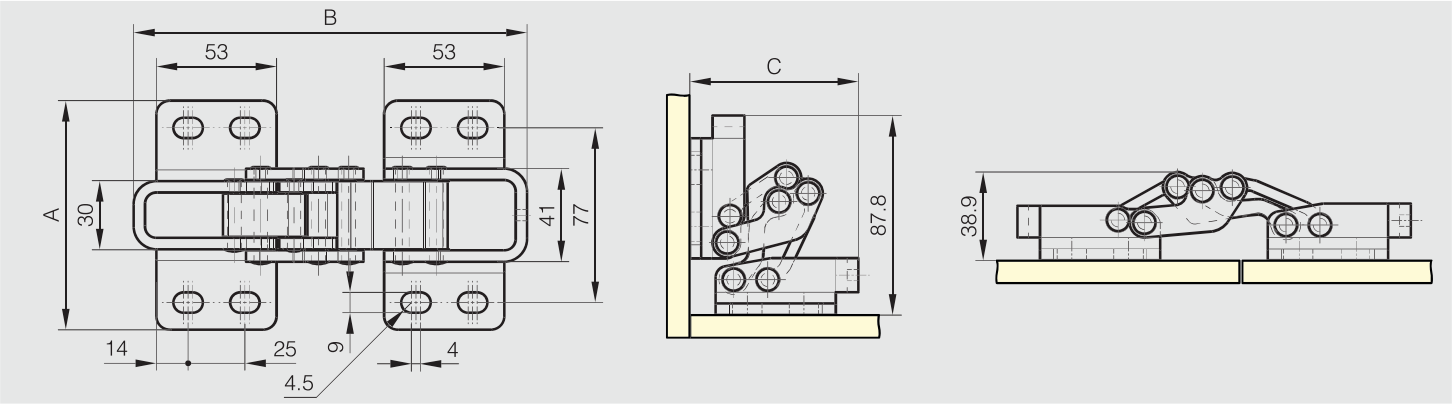

Concealed hinges - 90° opening

90° STAINLESS STEEL STEEL RoHS

Pins and links in 430 stainless steel for 70-1-3520.
Pins and links in 316L stainless steel for 70-1-3625.
Mounting features:
- For nested doors or surface mounted doors.
- LH or RH options.
- For horizontal or vertical applications.

Part number	Material	Finish	A	B	C	Weight (g)
70-1-3520	steel	zinc plated	44	29	32	67
70-1-3625	316L stainless steel	raw	44	29	32	65

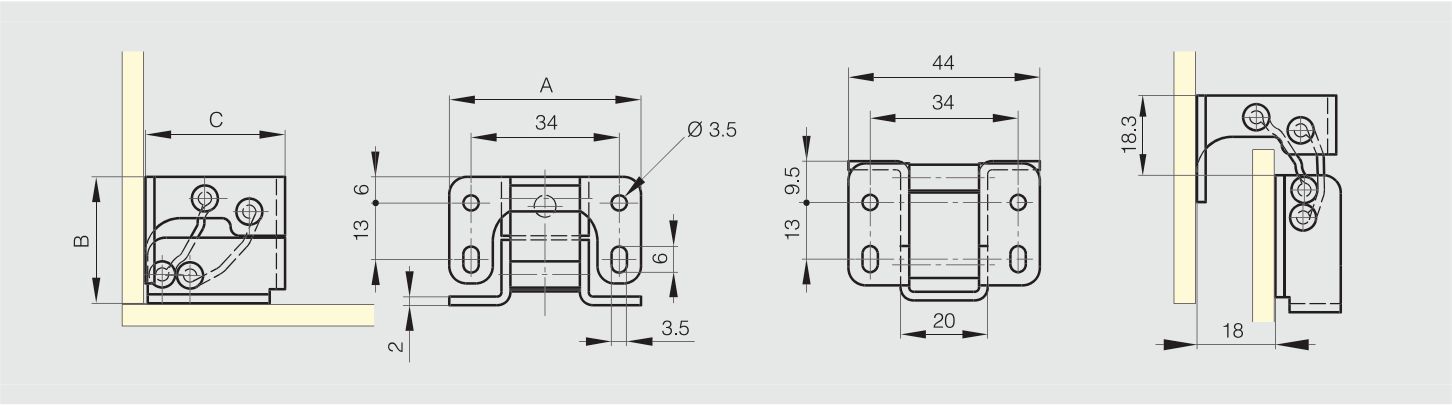

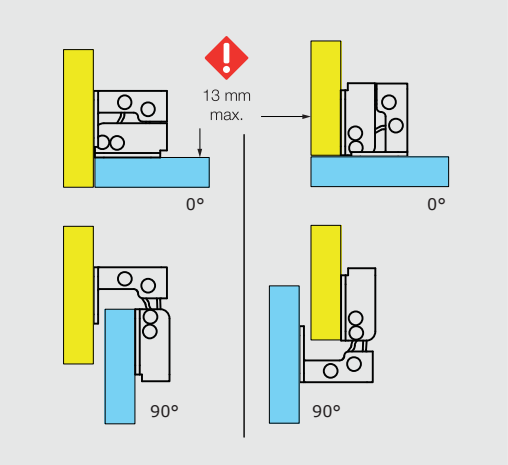

Nested door assembly shown

Surface mounted assembly shown

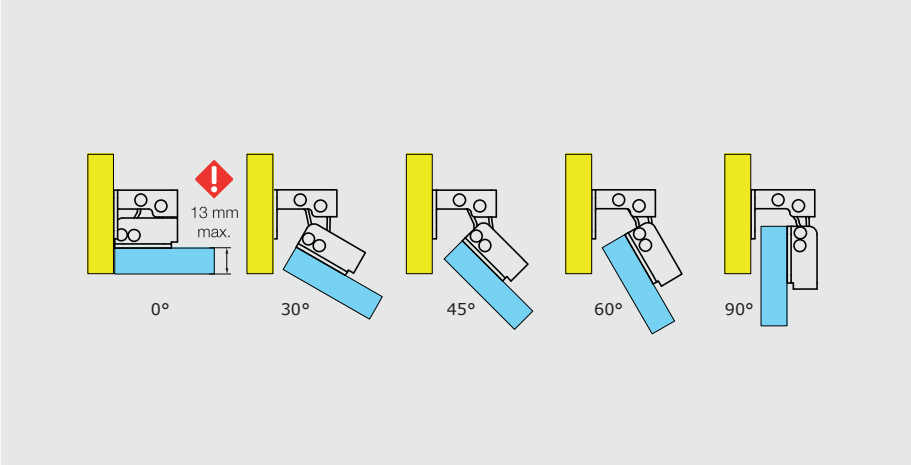

Nested door assembly shown

Concealed hinges - 125° opening

120° STAINLESS STEEL STEEL RoHS

Links in aluminium.
Pins in 430 stainless steel for 70-1-3639.
Pins in 304 Cu stainless steel for 70-1-3640.
Mounting features:
- For nested doors or surface mounted doors.
- LH or RH options.
- For horizontal or vertical applications.

Opening angle differs according to door thickness:
- 2 mm thickness: opening angle of 125°.
- 8 mm thickness: opening angle of 110°.
- 13 mm thickness: opening angle of 100°.

Please ask us for bespoke solutions.
Produced mainly in stainless steel, for a complete description of the materials contact us.

Part number	Material	Finish	A	B	C	Weight (g)
70-1-3639	steel	zinc plated	44	29	32	60
70-1-3640	316L stainless steel	raw	44	29	32	60

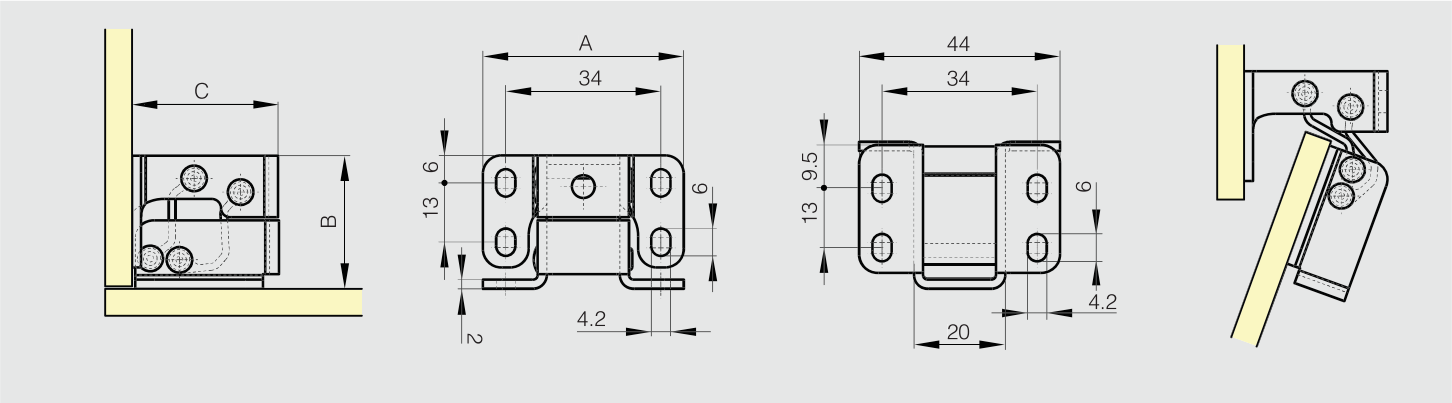

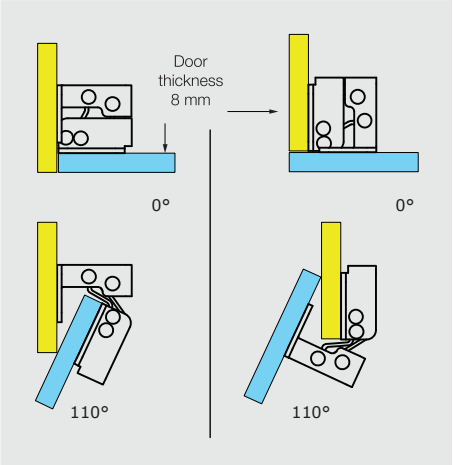

Nested door assembly shown

Surface mounted assembly shown

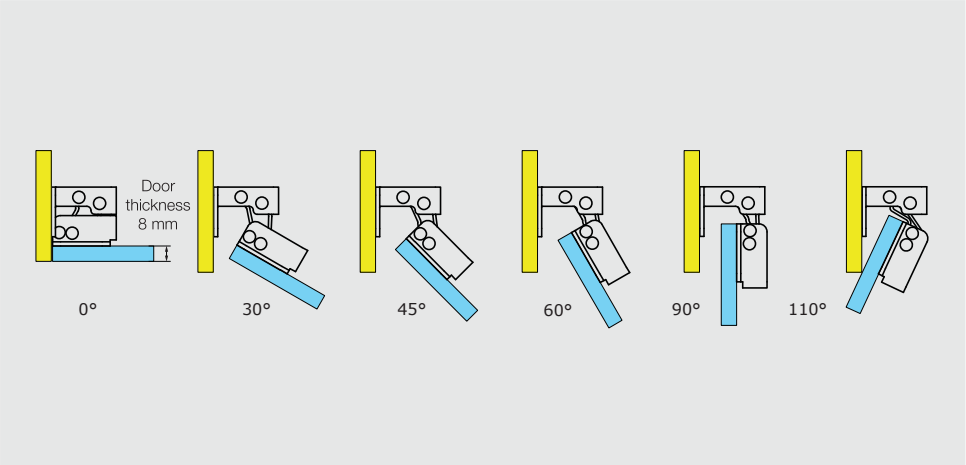

Nested door assembly shown

Concealed hinges (size M) - 125° opening

NEW

120° STAINLESS STEEL STEEL RoHS

Links in aluminium.
Pins in zinc plated steel for 70-1-3647.
Pins in 304 Cu stainless steel for 70-1-3648.

Mounting features:
- For nested doors or surface mounted doors.
- LH or RH options.
- For horizontal or vertical applications.

Opening angle differs according to door thickness:
- For thickness up to 10 mm: opening angle of 125°.
- 15 mm thickness: opening angle of 115°.
- 20 mm thickness: opening angle of 108°.

Please ask us for bespoke solutions.

	Part number	Material	Finish	A	B	C	Weight (g)
NEW	70-1-3647	steel	zinc plated	77	55.2	54	250
NEW	70-1-3648	316L stainless steel	raw	77	55.2	54	250

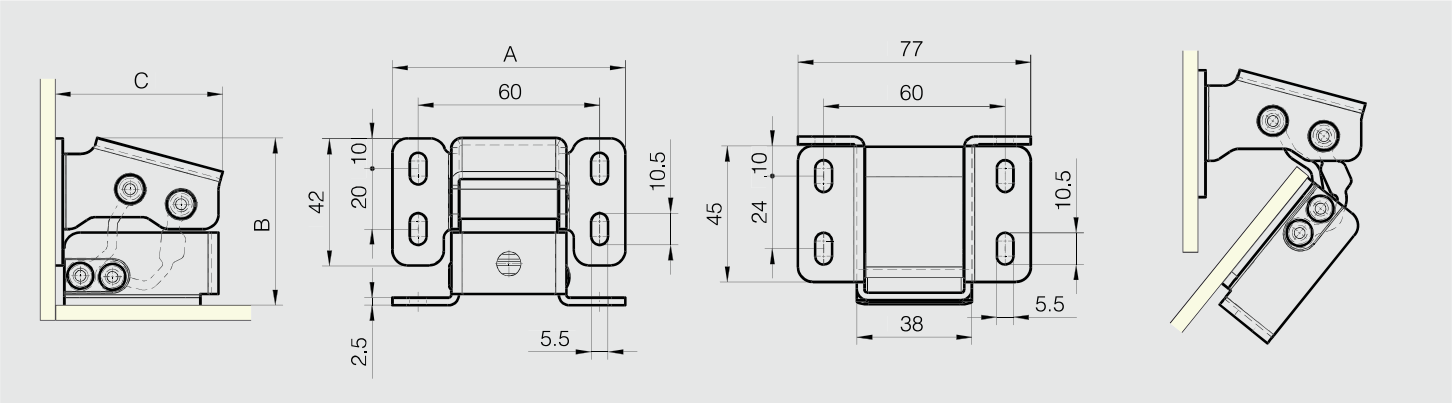

Concealed hinge - 110° opening

110° STEEL RoHS

Heavy duty concealed hinge.
Tested to 10,000 cycles using 2 hinges with a door weight of 25 kg measuring 1 m x 1 m.
Links in anodised aluminium.

Part number	Material	Finish	A	B	C	Weight (g)
70-1-3557	steel	zinc plated	102	80.5	76	520

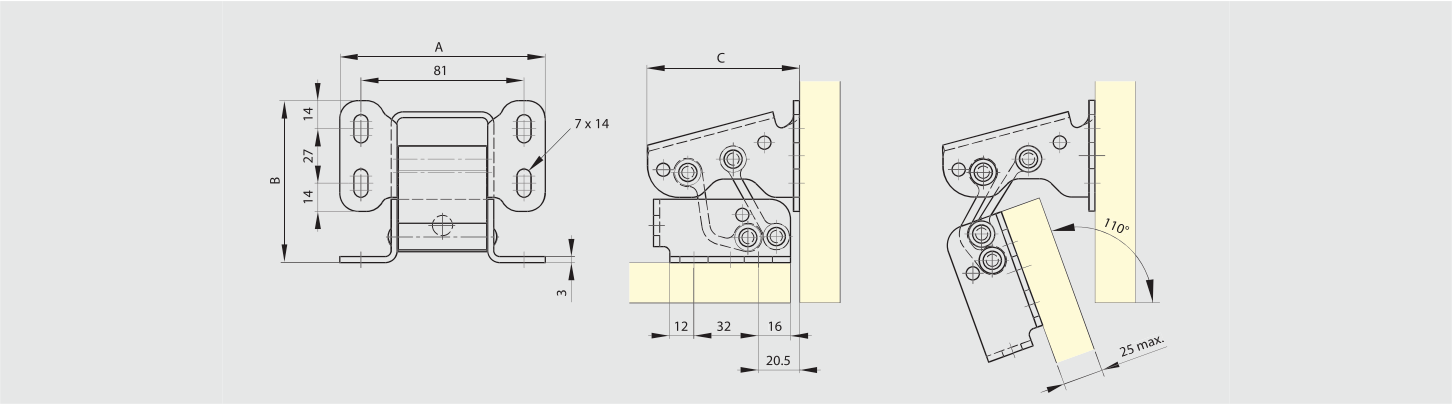

Spring loaded concealed hinge - 110° opening

110° STEEL RoHS

For horizontal applications only.
Fixing plates in polymer.

Part number	Material	Finish	A	B	C	Weight (g)
71-1-3611	steel	black zinc plated	60	162.4	71.4	132

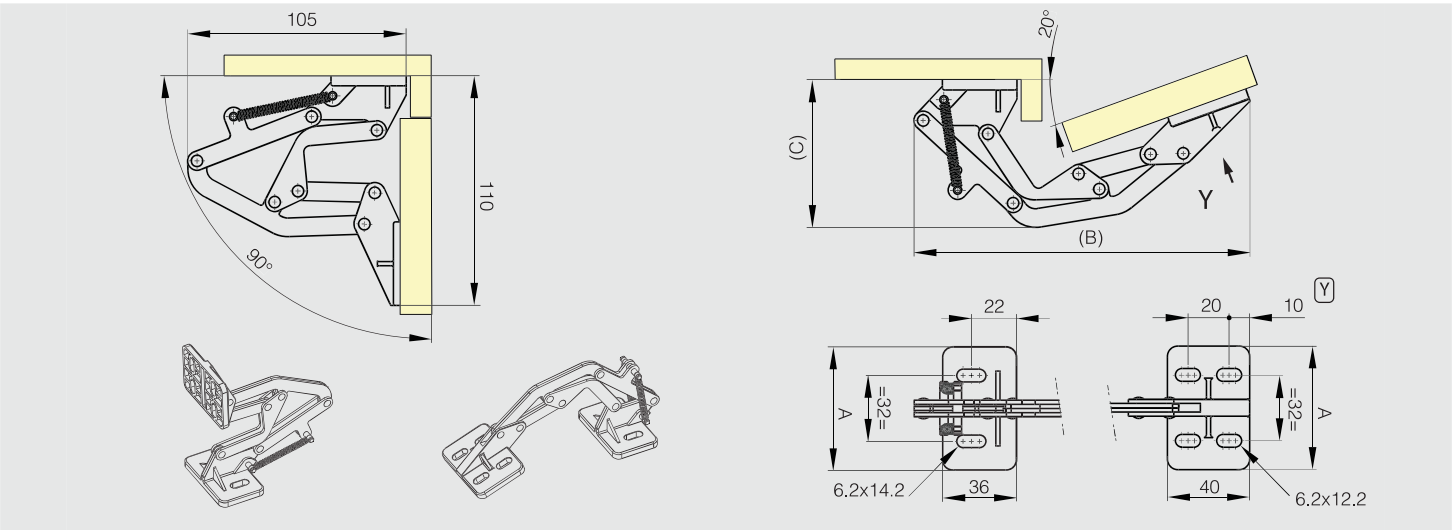

Concealed hinge - 7 axis - steel plates - 110° opening

NEW

110° STEEL RoHS

For horizontal applications only.
Fixing plates in steel.

	Part number	Material	Finish	A	B	C	Note	Weight (g)
NEW	70-1-3645	steel	zinc plated	50	166	74.7	without spring	208

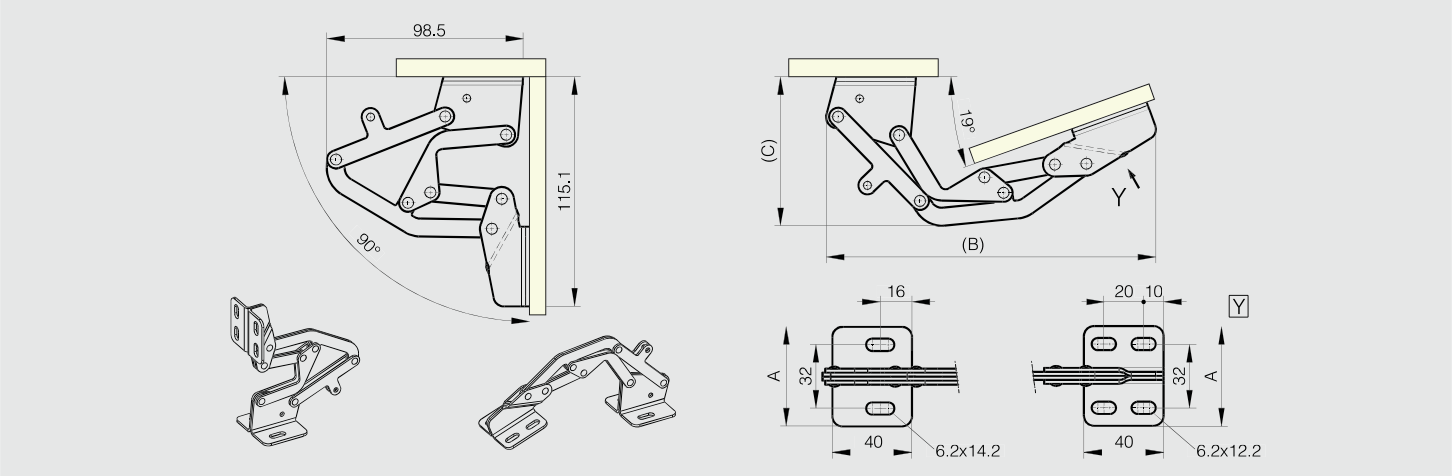

Spring loaded concealed hinge - 7 axis - steel plates - 110° opening

NEW

110° STEEL RoHS

For horizontal applications only.
Fixing plates in steel.
Opening spring force: 1 N.m / hinge
Closing spring force: 3 N.m / hinge

	Part number	Material	Finish	A	B	C	Note	Weight (g)
NEW	70-1-3646	steel	zinc plated	50	166	74.7	with spring	222

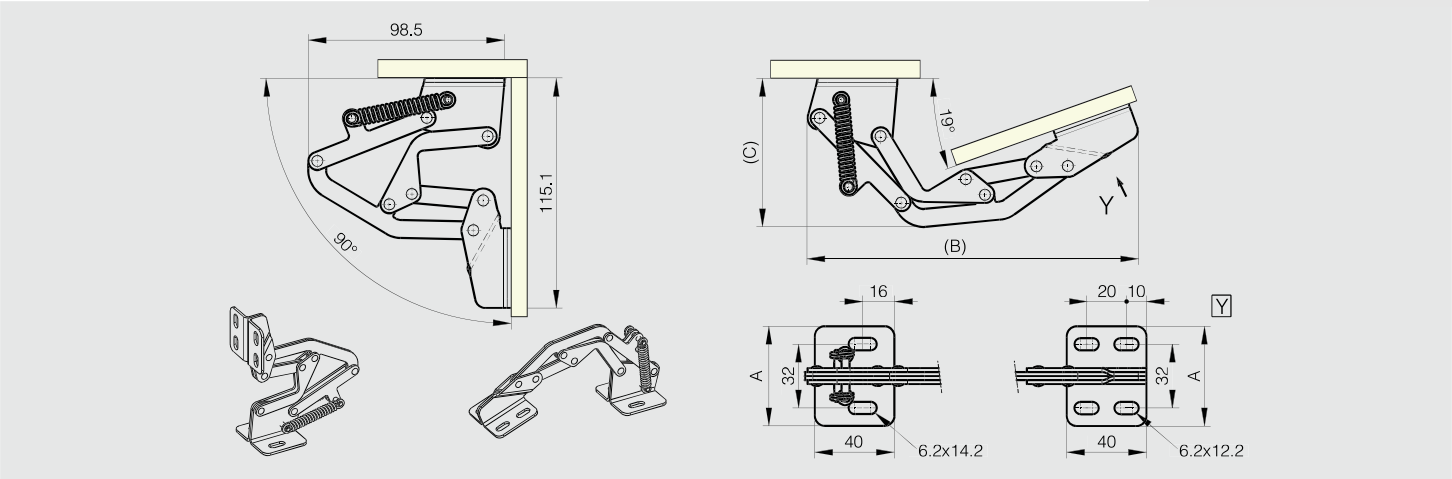

Spring loaded concealed hinges - 90° opening

90° STAINLESS STEEL STEEL RoHS

Produced mainly in stainless steel, for a complete description of the materials contact us.

Part number	Material	Finish	A	B	C	Weight (g)
70-1-9003	steel	nickel plated	44	104.5	26	70
70-1-9000	316 stainless steel	raw	44	104.5	26	70

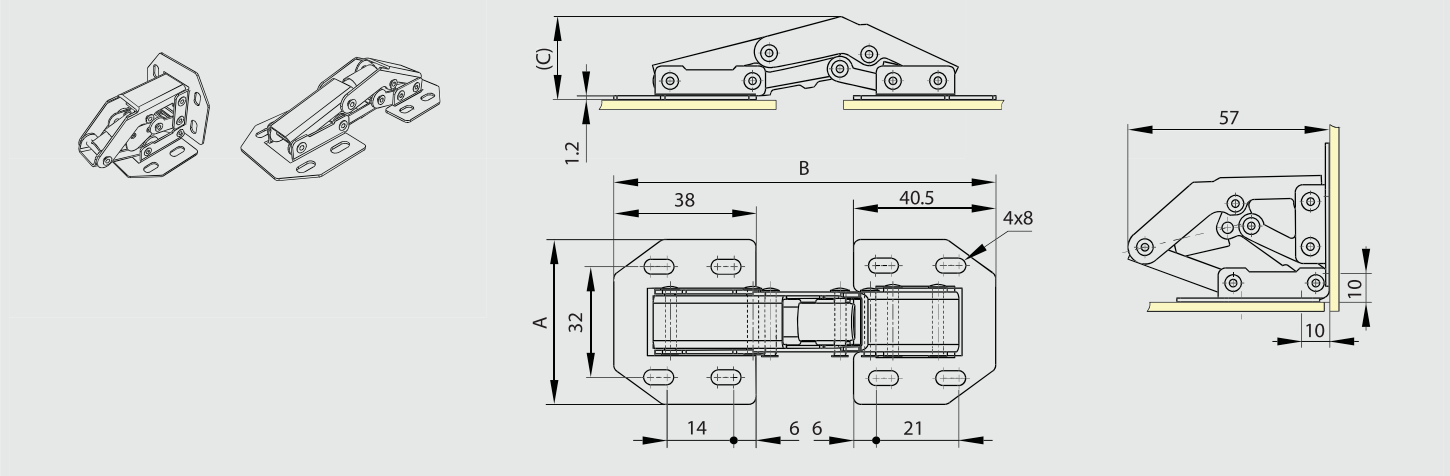

Spring loaded concealed hinges - 150° opening

150° STAINLESS STEEL STEEL RoHS

For door thickness max: 20 mm.
Produced mainly in stainless steel, for a complete description of the materials contact us.

Part number	Material	Finish	A	B	C	Weight (g)
70-1-9001	steel	nickel plated	52	121	73.5	140
70-1-9002	304 stainless steel	raw	52	121	73.5	140

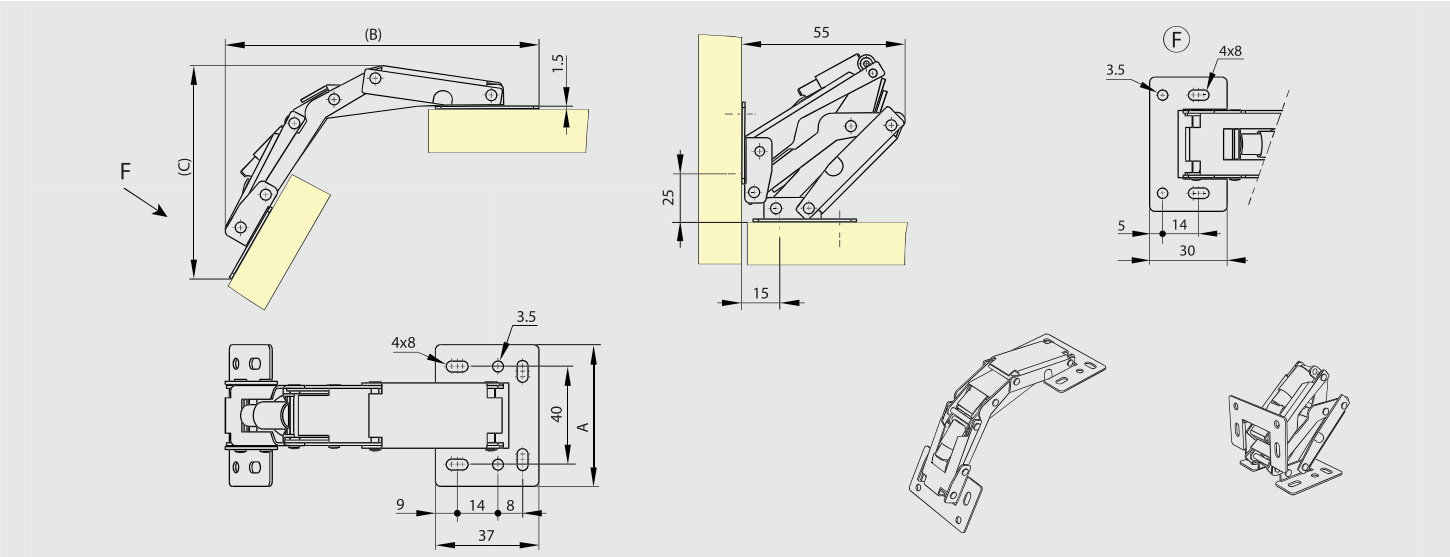

Concealed hinges with two cranked leaves - undrilled - 120° opening - version A

120° STAINLESS STEEL RoHS

Hinges for side door of baggage compartment (bus and coach, bodywork...)

Part number	Material	Finish	A	B	C	D	E	Weight (g)
39-1-3885	304 stainless steel	raw	300	44.1	1.5	3	12.5	440
39-1-3887	304 stainless steel	raw	600	44.1	1.5	3	12.5	880

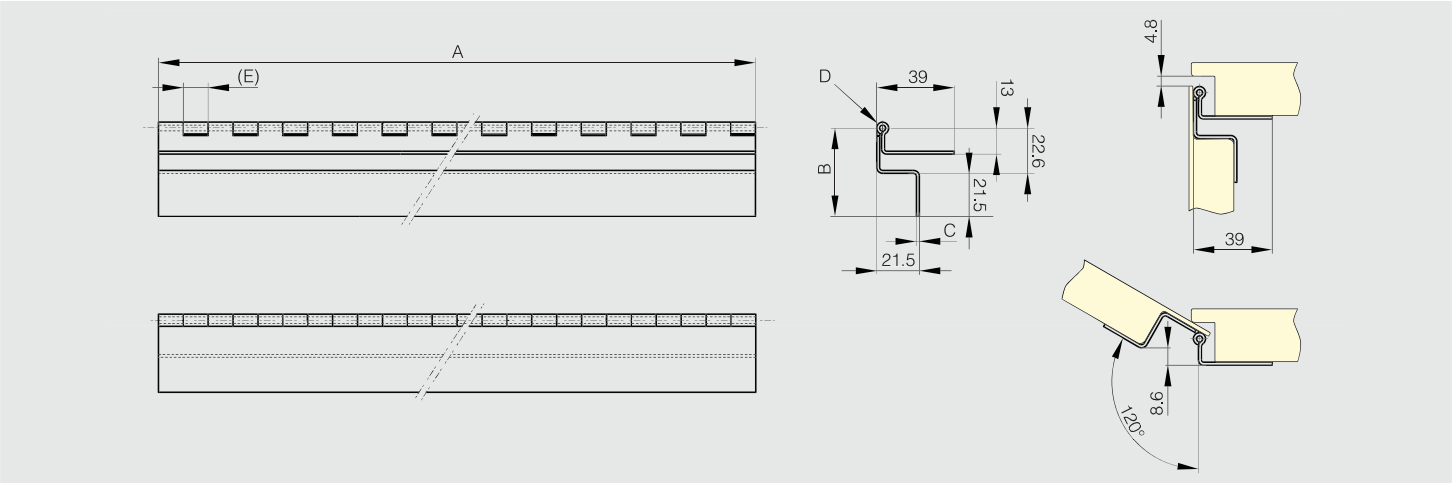

Concealed hinges with two cranked leaves - drilled - 120° opening - version A

120° STAINLESS STEEL RoHS

Hinges for side door of baggage compartment (bus and coach, bodywork...)
Use rivets for 4.2 diameter holes (door side).
Use self-drilling screws for 12.2 diameter holes (frame side).

Part number	Material	Finish	A	B	C	D	E	G	H	Weight (g)
39-1-3886	304 stainless steel	raw	300	44.1	1.5	3	12.5	160	70	430
39-1-3888	304 stainless steel	raw	600	44.1	1.5	3	12.5	160	60	870

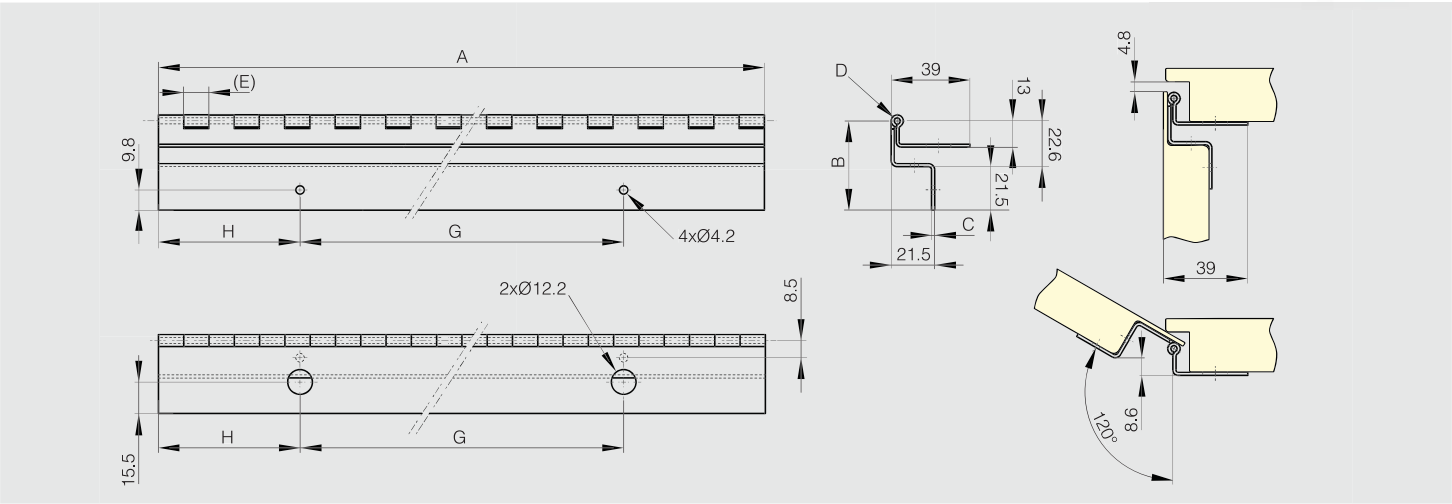

Concealed hinges with two cranked leaves - undrilled - 120° opening - version B

120° STAINLESS STEEL RoHS

Hinges for side door of baggage compartment (bus and coach, bodywork...)

Part number	Material	Finish	A	B	C	D	E	Weight (g)
39-1-3889	304 stainless steel	raw	300	54.1	1.5	3	12.5	430
39-1-3891	304 stainless steel	raw	600	54.1	1.5	3	12.5	870

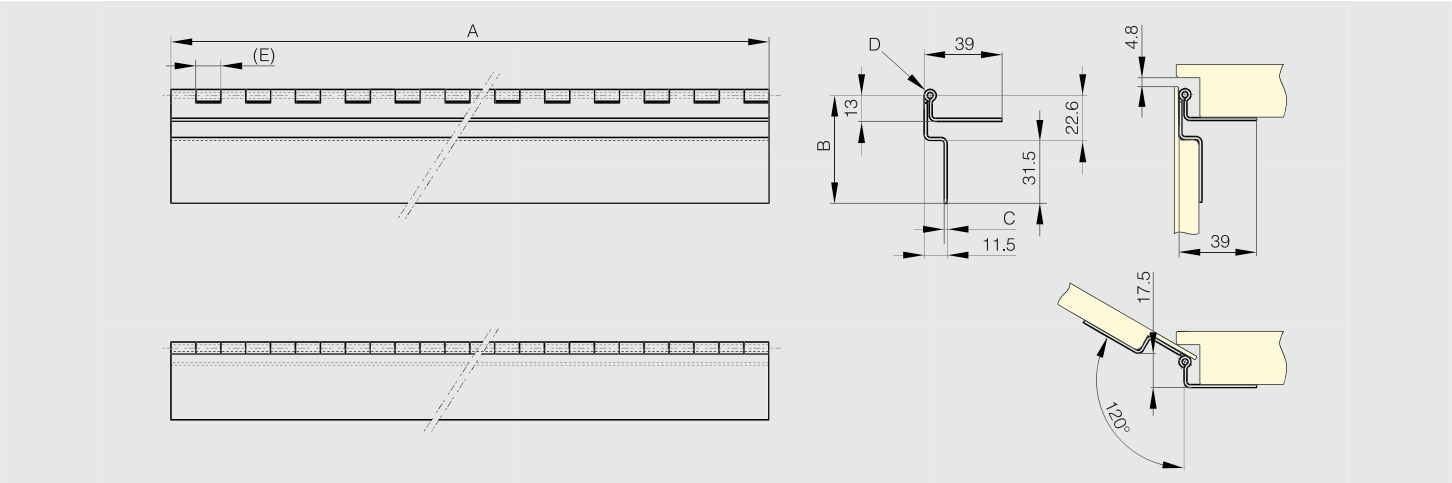

Concealed hinges with two cranked leaves - drilled - 120° opening - version B

120° STAINLESS STEEL RoHS

Hinges for side door of baggage compartment (bus and coach, bodywork...)
Use rivets for 4.2 diameter holes (door side).
Use self-drilling screws for 12.2 diameter holes (frame side).

Part number	Material	Finish	A	B	C	D	E	G	H	J	K	L	Weight (g)
39-1-3890	304 stainless steel	raw	300	54.1	1.5	3	12.5	160	30	80	70	160	430
39-1-3892	304 stainless steel	raw	600	54.1	1.5	3	12.5	260	40	130	60	160	870

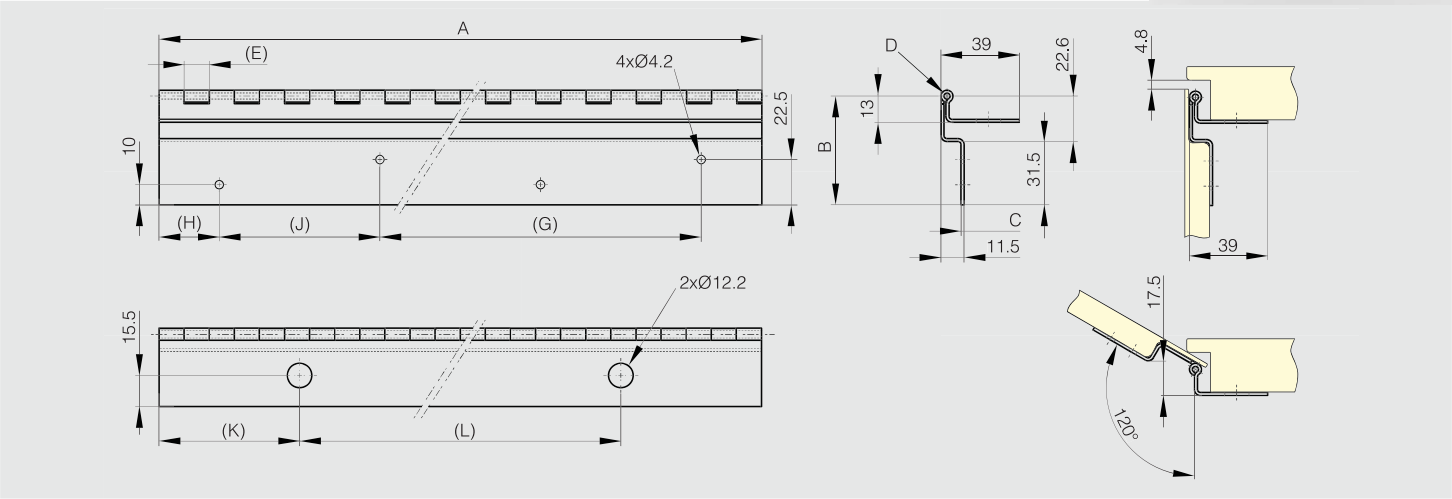

The way a spring hinge opens relates to the spring type

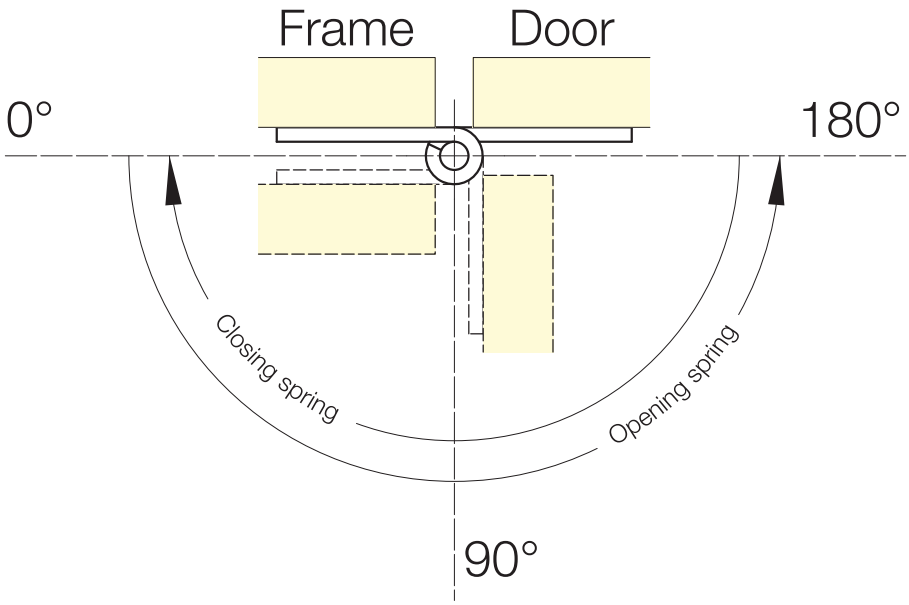

Angles of opening or closing

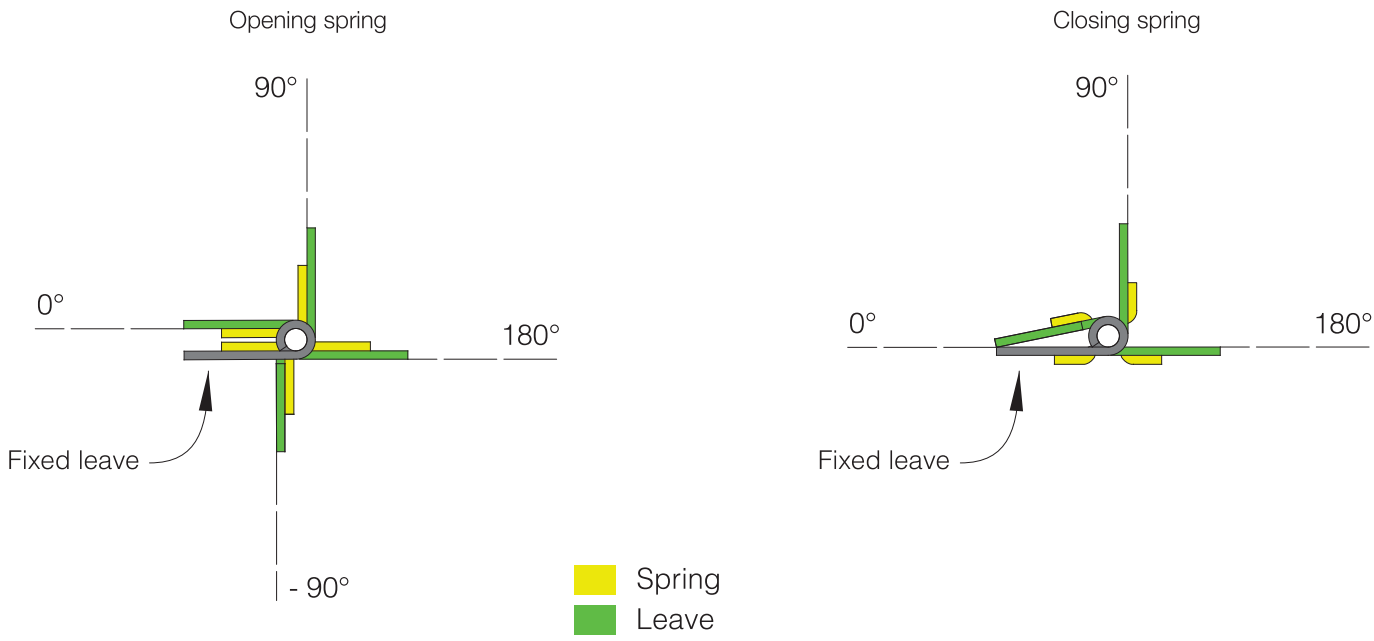

Definition of spring hinge torques

M: hinge torque at various positions
M(0°): torque when hinge leaves are parallel
M(90°): torque when leaves are at 90°
M(180°): torque when leaves are at 180°

Spring hinges delivered as shown

When delivered, hinges have the following position:

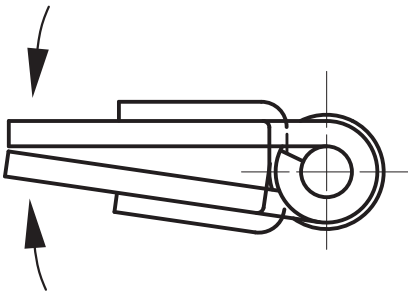

Hinge with closing spring

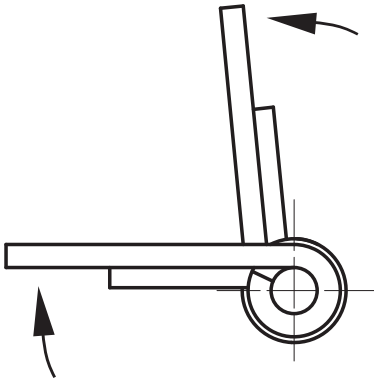

Hinge with opening spring

Mounting and opening direction

Concealed mounting	Surface mounting

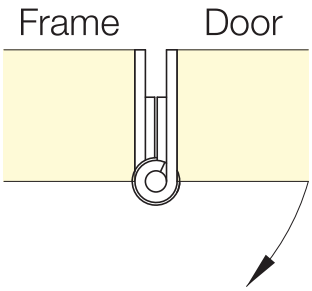

Hinge with **opening** spring

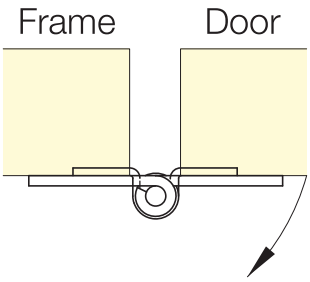

Hinge with **closing** spring

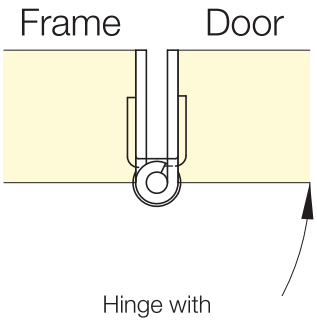

Hinge with **closing** spring

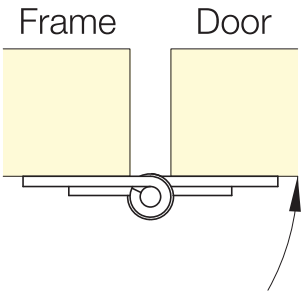

Hinge with **opening** spring

Arrows indicate rotation of hinge due to the effect of the spring

Polymer hinges with or without adjustable spring torque

NEW

180° POLYMER RoHS

Hinge with adjustable spring torque.

Opening spring force on delivery:
M(0°): 0.75 N.m / M(90°): 0.5 N.m / M(180°): 0.25 N.m
Recommended maximum torque for opening spring: 1.1 N.m at 60° (4 clicks).

Closing spring force on delivery:
M(0°): 0 N.m / M(90°): 0.25 N.m / M(180°): 0.5 N.m
Recommended maximum torque for closing spring: 1.1 N.m at 120° (6 clicks).

Material: 30% GF reinforced PA 6.
Spring in Bezinal steel.
Other components in POM.

Spring force adjusted with a T27 Torx key in option (part number 99-1-3729).
Adjustment instructions: scan the QR code.

	Part number	Material	Finish	A	B	C	D	Note	Weight (g)
NEW	54-1-3552	polymer	black	75	65	5	13	opening spring	45
NEW	54-1-3553	polymer	black	75	65	5	13	closing spring	45
NEW	54-1-3554	polymer	black	75	65	5	13	without spring	38

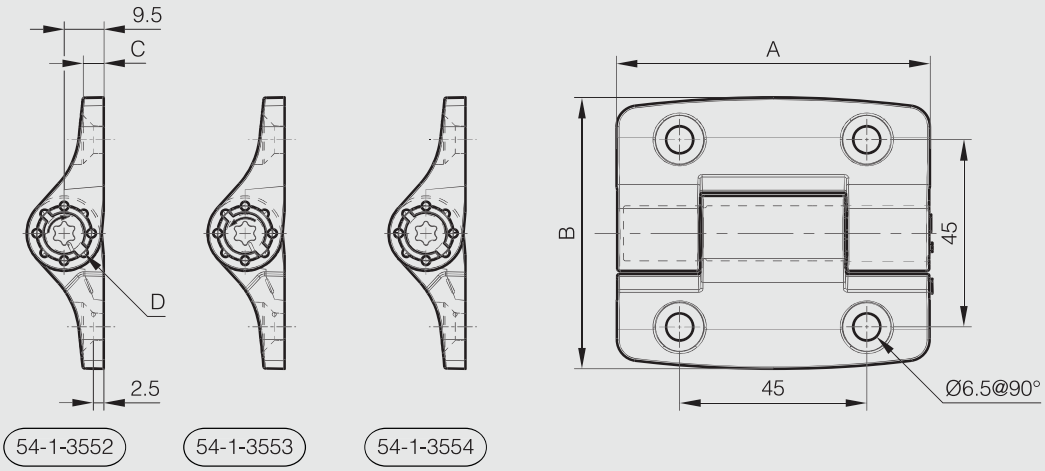

Instructions

opening spring

closing spring

Spring hinges - aluminium profile 0.20 N.m - diameter 8

NEW

180° ALU RoHS

Opening spring force:
M(0°): 0.23 N.m / M(90°): 0.15 N.m / M(180°): 0.08 N.m
Closing spring force:
M(0°): 0.08 N.m / M(90°): 0.15 N.m / M(180°): 0.23 N.m

2 other versions available: with friction or with detent mechanism.

	Part number	Material	Finish	A	B	C	D	Note	Weight (g)
	72-1-4256	6060 T5 alu	clear anodised	30	35	3.3	8	opening spring	10
	72-1-4257	6060 T5 alu	black anodised	30	35	3.3	8	opening spring	10
NS	72-1-4318	6060 T5 alu	clear anodised	30	35	3.3	8	opening spring / with M3 studs	13
NS	72-1-4319	6060 T5 alu	black anodised	30	35	3.3	8	opening spring / with M3 studs	13
	72-1-4275	6060 T5 alu	clear anodised	30	35	3.3	8	closing spring	10
	72-1-4276	6060 T5 alu	black anodised	30	35	3.3	8	closing spring	10
NS	72-1-4333	6060 T5 alu	clear anodised	30	35	3.3	8	closing spring / with M3 studs	13
NS	72-1-4334	6060 T5 alu	black anodised	30	35	3.3	8	closing spring / with M3 studs	13

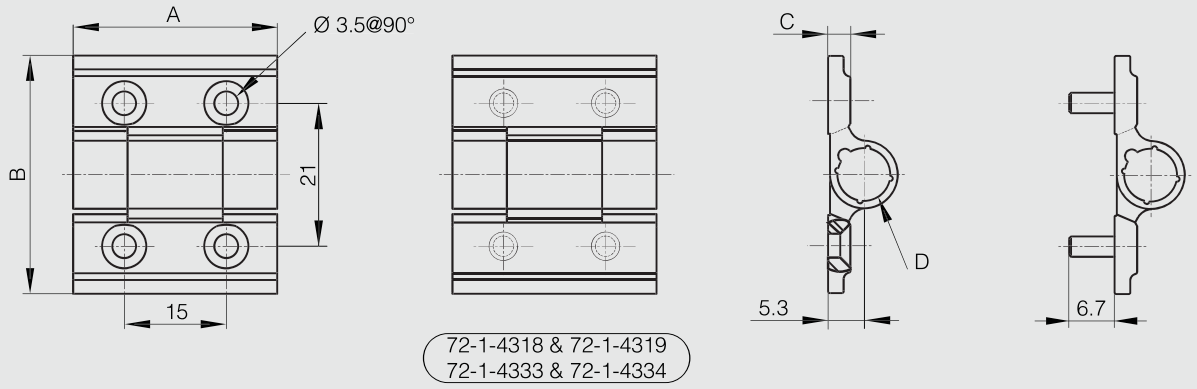

Spring hinges - aluminium profile 0.50 N.m - diameter 8

NEW

180° ALU RoHS

Opening spring force:
M(0°): 0.48 N.m / M(90°): 0.3 N.m / M(180°): 0.16 N.m

	Part number	Material	Finish	A	B	C	D	Note	Weight (g)
NEW	72-1-4309	6060 T5 alu	clear anodised	60	35	3.3	8	opening spring	20
NEW	72-1-4310	6060 T5 alu	black anodised	60	35	3.3	8	opening spring	20

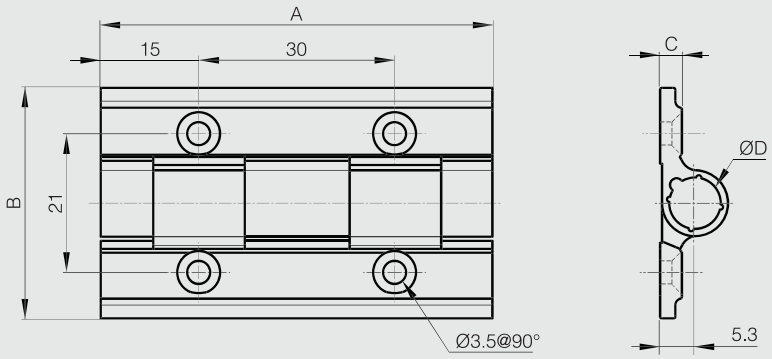

Spring hinges - aluminium profile 0.70 N.m - diameter 8

NEW

180° ALU RoHS

Opening spring force:
M(0°): 0.7 N.m / M(90°): 0.5 N.m / M(180°): 0.3 N.m

	Part number	Material	Finish	A	B	C	D	Note	Weight (g)
NEW	72-1-4314	6060 T5 alu	clear anodised	90	35	3.3	8	opening spring	40
NEW	72-1-4315	6060 T5 alu	black anodised	90	35	3.3	8	opening spring	40

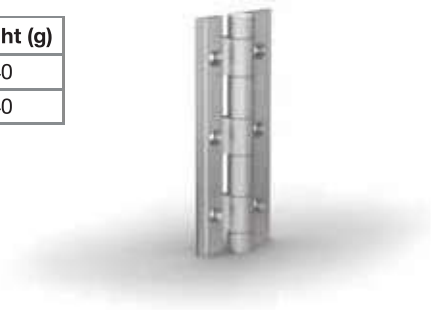

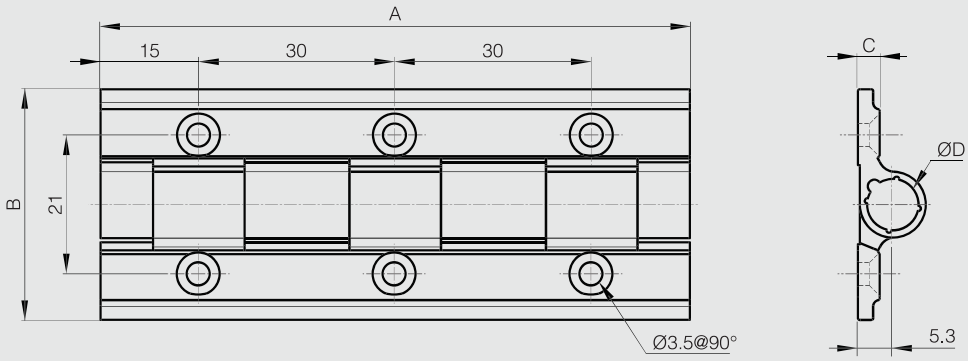

Spring hinges - aluminium profile 0.90 N.m - diameter 8

NEW

180° ALU RoHS

Opening spring force:
M(0°): 0.92 N.m / M(90°): 0.7 N.m / M(180°): 0.44 N.m

	Part number	Material	Finish	A	B	C	D	Note	Weight (g)
NEW	72-1-4316	6060 T5 alu	clear anodised	120	35	3.3	8	opening spring	50
NEW	72-1-4317	6060 T5 alu	black anodised	120	35	3.3	8	opening spring	50

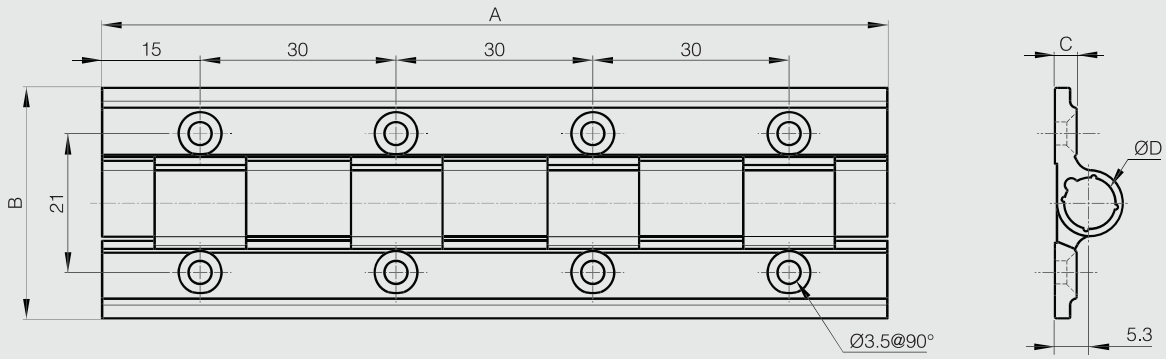

Spring hinges - aluminium profile 0.35 N.m - diameter 13

NEW

180° ALU RoHS

Opening spring force:
M(0°): 0.35 N.m / M(90°): 0.24 N.m / M(180°): 0.12 N.m
Closing spring force:
M(0°): 0.12 N.m / M(90°): 0.24 N.m / M(180°): 0.35 N.m

3 other versions available: free swinging, with friction or with detent mechanism.

	Part number	Material	Finish	A	B	C	D	Note	Weight (g)
	72-1-4220	6060 T5 alu	clear anodised	67	55	4.5	13	opening spring	62
	72-1-4221	6060 T5 alu	black anodised	67	55	4.5	13	opening spring	60
	72-1-4292	6060 T5 alu	clear anodised	67	55	4.5	13	opening spring/ delivered flat	63
	72-1-4293	6060 T5 alu	black anodised	67	55	4.5	13	opening spring/ delivered flat	63
NS	72-1-4366	6060 T5 alu	blue anodised	67	55	4.5	13	opening spring/ delivered flat	60
NS	72-1-4367	6060 T5 alu	red anodised	67	55	4.5	13	opening spring/ delivered flat	60
NS	72-1-4368	6060 T5 alu	bronze anodised	67	55	4.5	13	opening spring/ delivered flat	60
NS	72-1-4369	6060 T5 alu	gold anodised	67	55	4.5	13	opening spring/ delivered flat	60
NEW	72-1-4323	6060 T5 alu	clear anodised	67	55	4.5	13	opening spring / delivered flat / with M6 studs	80
NEW	72-1-4324	6060 T5 alu	black anodised	67	55	4.5	13	opening spring / delivered flat / with M6 studs	80
	72-1-4286	6060 T5 alu	clear anodised	67	55	4.5	13	closing spring	63
	72-1-4287	6060 T5 alu	black anodised	67	55	4.5	13	closing spring	63
NS	72-1-4370	6060 T5 alu	blue anodised	67	55	4.5	13	closing spring	60
NS	72-1-4371	6060 T5 alu	red anodised	67	55	4.5	13	closing spring	60
NS	72-1-4372	6060 T5 alu	bronze anodised	67	55	4.5	13	closing spring	60
NS	72-1-4373	6060 T5 alu	gold anodised	67	55	4.5	13	closing spring	60
NS	72-1-4336	6060 T5 alu	clear anodised	67	55	4.5	13	closing spring / with M6 studs	79
NS	72-1-4337	6060 T5 alu	black anodised	67	55	4.5	13	closing spring / with M6 studs	79

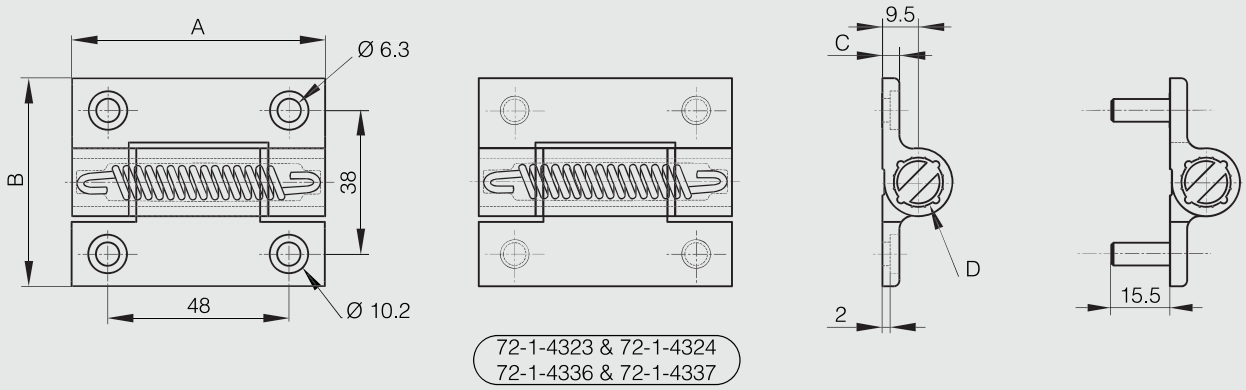

Spring hinges - aluminium profile 0.70 N.m - diameter 13

NEW

180° ALU RoHS

Opening spring force:
M(0°): 0.7 N.m / M(90°): 0.45 N.m / M(180°): 0.23 N.m
Closing spring force:
M(0°): 0.23 N.m / M(90°): 0.45 N.m / M(180°): 0.7 N.m

3 other versions available: free swinging, with friction or with detent mechanism.

	Part number	Material	Finish	A	B	C	D	Note	Weight (g)
	72-1-4218	6060 T5 alu	clear anodised	67	55	4.5	13	opening spring	68
	72-1-4219	6060 T5 alu	black anodised	67	55	4.5	13	opening spring	66
	72-1-4294	6060 T5 alu	clear anodised	67	55	4.5	13	opening spring / delivered flat	66
	72-1-4295	6060 T5 alu	black anodised	67	55	4.5	13	opening spring / delivered flat	66
NS	72-1-4374	6060 T5 alu	blue anodised	67	55	4.5	13	opening spring/ delivered flat	66
NS	72-1-4375	6060 T5 alu	red anodised	67	55	4.5	13	opening spring/ delivered flat	66
NS	72-1-4376	6060 T5 alu	bronze anodised	67	55	4.5	13	opening spring/ delivered flat	66
NS	72-1-4377	6060 T5 alu	gold anodised	67	55	4.5	13	opening spring/ delivered flat	66
NEW	72-1-4325	6060 T5 alu	clear anodised	67	55	4.5	13	opening spring / delivered flat / with M6 studs	85
NEW	72-1-4326	6060 T5 alu	black anodised	67	55	4.5	13	opening spring / delivered flat / with M6 studs	85
	72-1-4272	6060 T5 alu	clear anodised	67	55	4.5	13	closing spring	65
	72-1-4273	6060 T5 alu	black anodised	67	55	4.5	13	closing spring	65
NS	72-1-4378	6060 T5 alu	blue anodised	67	55	4.5	13	closing spring	65
NS	72-1-4379	6060 T5 alu	red anodised	67	55	4.5	13	closing spring	65
NS	72-1-4380	6060 T5 alu	bronze anodised	67	55	4.5	13	closing spring	65
NS	72-1-4381	6060 T5 alu	gold anodised	67	55	4.5	13	closing spring	65
NEW	72-1-4322	6060 T5 alu	clear anodised	67	55	4.5	13	closing spring / with M6 studs	84
NS	72-1-4335	6060 T5 alu	black anodised	67	55	4.5	13	closing spring / with M6 studs	84

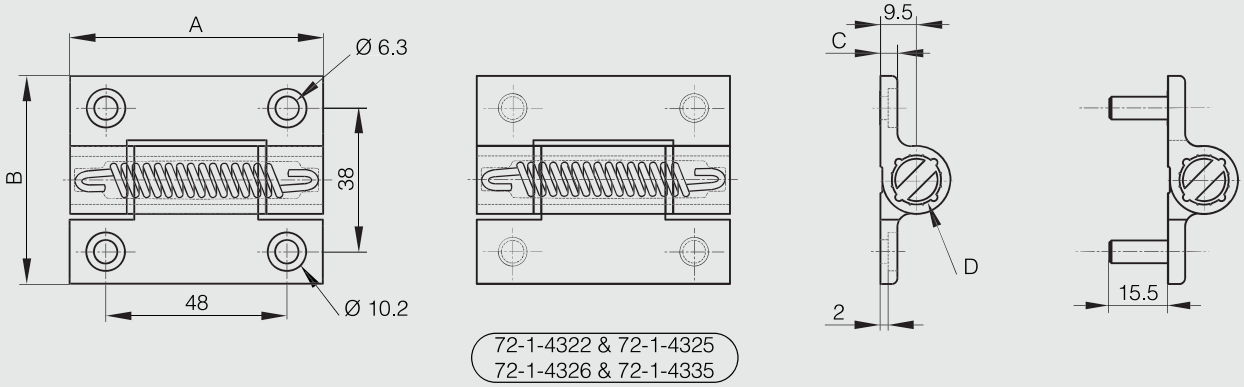

Spring hinges - aluminium profile 1.3 N.m - diameter 13

NEW

180° ALU RoHS

Opening spring force:
M(0°): 1.3 N.m / M(90°): 1.1 N.m / M(180°): 0.9 N.m
Closing spring force:
M(0°): 0.5 N.m / M(90°): 0.7 N.m / M(180°): 1 N.m

3 other versions available: free swinging, with friction or with detent mechanism.

	Part number	Material	Finish	A	B	C	D	Note	Weight (g)
	72-1-4222	6060 T5 alu	clear anodised	67	55	4.5	13	opening spring	68
	72-1-4223	6060 T5 alu	black anodised	67	55	4.5	13	opening spring	68
	72-1-4296	6060 T5 alu	clear anodised	67	55	4.5	13	opening spring / delivered flat	68
	72-1-4297	6060 T5 alu	black anodised	67	55	4.5	13	opening spring / delivered flat	68
NS	72-1-4382	6060 T5 alu	blue anodised	67	55	4.5	13	opening spring/ delivered flat	68
NS	72-1-4383	6060 T5 alu	red anodised	67	55	4.5	13	opening spring/ delivered flat	68
NS	72-1-4384	6060 T5 alu	bronze anodised	67	55	4.5	13	opening spring/ delivered flat	68
NS	72-1-4385	6060 T5 alu	gold anodised	67	55	4.5	13	opening spring/ delivered flat	68
NEW	72-1-4327	6060 T5 alu	clear anodised	67	55	4.5	13	opening spring / delivered flat / with M6 studs	87
NEW	72-1-4328	6060 T5 alu	black anodised	67	55	4.5	13	opening spring / delivered flat / with M6 studs	87
	72-1-4260	6060 T5 alu	clear anodised	67	55	4.5	13	closing spring	67
	72-1-4261	6060 T5 alu	black anodised	67	55	4.5	13	closing spring	67
NS	72-1-4386	6060 T5 alu	blue anodised	67	55	4.5	13	closing spring	67
NS	72-1-4387	6060 T5 alu	red anodised	67	55	4.5	13	closing spring	67
NS	72-1-4388	6060 T5 alu	bronze anodised	67	55	4.5	13	closing spring	67
NS	72-1-4389	6060 T5 alu	gold anodised	67	55	4.5	13	closing spring	67
NEW	72-1-4320	6060 T5 alu	clear anodised	67	55	4.5	13	closing spring / with M6 studs	86
NEW	72-1-4321	6060 T5 alu	black anodised	67	55	4.5	13	closing spring / with M6 studs	86

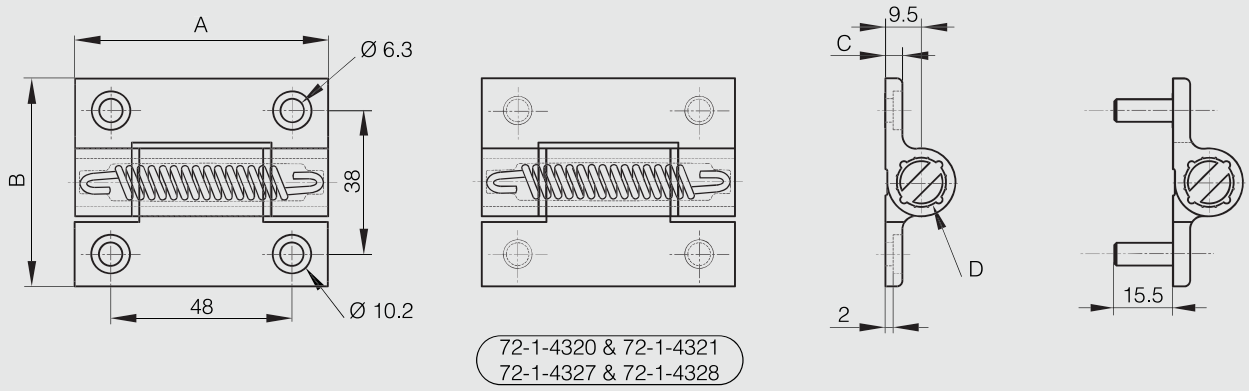

Spring hinges - aluminium profile 3.80 N.m - diameter 18

NEW

180° ALU RoHS

Opening spring force:
M(0°): 3.80 N.m / M(90°): 3.10 N.m / M(180°): 2.40 N.m
Closing spring force:
M(0°): 2.20 N.m / M(90°): 2.90 N.m / M(180°): 3.50 N.m

Free swinging hinge without spring available (part number: 72-1-4241 in colorless or 72-1-4242 in black).

	Part number	Material	Finish	A	B	C	D	Note	Weight (g)
	72-1-4231	6082 T5 alu	clear anodised	100	82.5	5.5	18	opening spring	185
	72-1-4232	6082 T5 alu	black anodised	100	82.5	5.5	18	opening spring	183
	72-1-4258	6082 T5 alu	clear anodised	100	82.5	5.5	18	closing spring	191
	72-1-4259	6082 T5 alu	black anodised	100	82.5	5.5	18	closing spring	191
NEW	72-1-4331	6082 T5 alu	clear anodised	100	82.5	5.5	18	closing spring / with M6 studs	188
NEW	72-1-4332	6082 T5 alu	black anodised	100	82.5	5.5	18	closing spring / with M6 studs	188

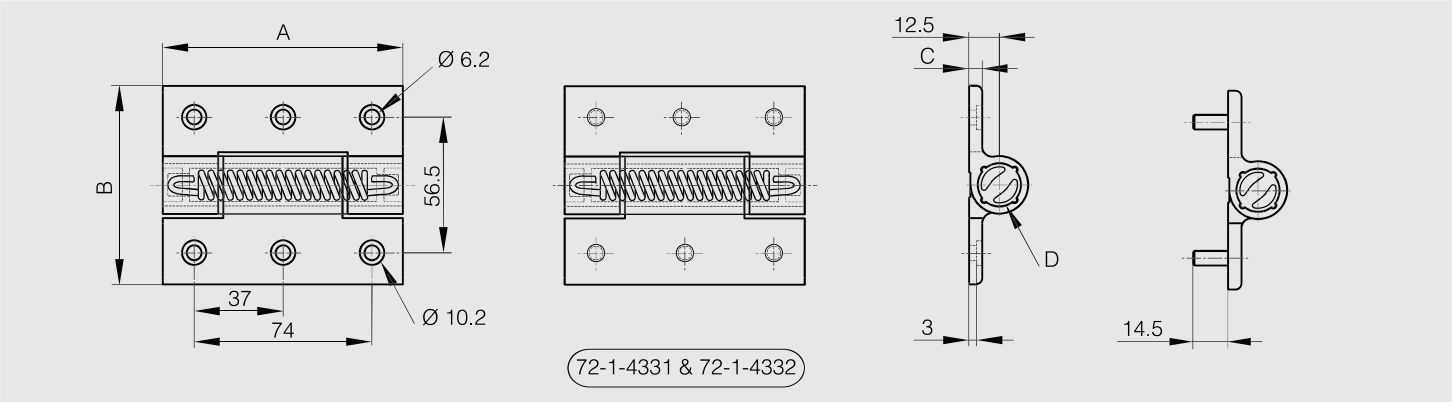

Stainless steel hinges with concealed spring 0.35 N.m

NEW

180° STAINLESS STEEL RoHS

Opening spring force:
M(0°): 0.35 N.m / M(90°): 0.24 N.m / M(180°): 0.12 N.m
Closing spring force:
M(0°): 0.12 N.m / M(90°): 0.24 N.m / M(180°): 0.35 N.m

Spring in Bezinal steel.
Washers in POM.

316 stainless steel version : please contact us.

	Part number	Material	Finish	A	B	C	D	Note	Weight (g)
NEW	72-1-4409	304 stainless steel	deburred	67	55	4.5	13	opening spring/ delivered flat	170
NEW	72-1-4410	304 stainless steel	deburred	67	55	4.5	13	closing spring	170

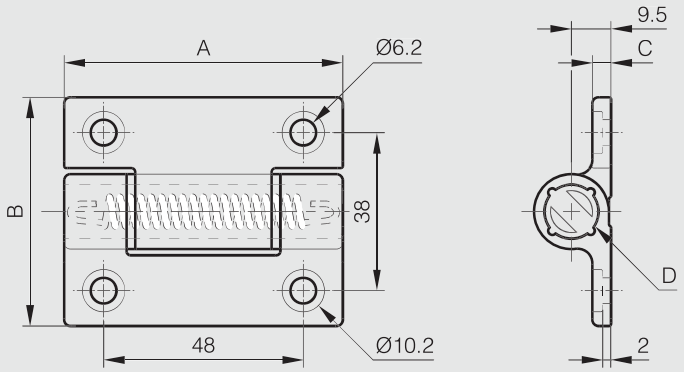

Stainless steel hinges with concealed spring 0.7 N.m

NEW

180° STAINLESS STEEL RoHS

Opening spring force:
M(0°): 0.7 N.m / M(90°): 0.45 N.m / M(180°): 0.23 N.m
Closing spring force:
M(0°): 0.23 N.m / M(90°): 0.45 N.m / M(180°): 0.7 N.m

Spring in Bezinal steel.
Washers in POM.

316 stainless steel version : please contact us.

	Part number	Material	Finish	A	B	C	D	Note	Weight (g)
NEW	72-1-4411	304 stainless steel	deburred	67	55	4.5	13	opening spring/ delivered flat	170
NEW	72-1-4412	304 stainless steel	deburred	67	55	4.5	13	closing spring	170

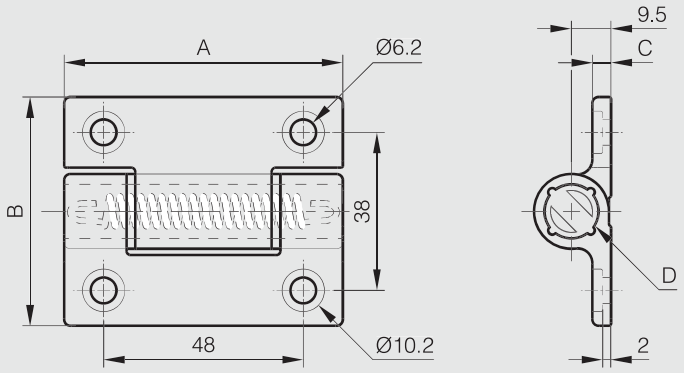

Stainless steel hinges with concealed spring 1.3 N.m

NEW

180° INOX RoHS

Opening spring force:
M(0°): 1.3 N.m / M(90°): 1.1 N.m / M(180°): 0.9 N.m
Closing spring force:
M(0°): 0.5 N.m / M(90°): 0.7 N.m / M(180°): 1 N.m

Spring in Bezinal steel.
Washers in POM.

316 stainless steel version : please contact us.

	Part number	Material	Finish	A	B	C	D	Note	Weight (g)
NEW	72-1-4413	304 stainless steel	deburred	67	55	4.5	13	opening spring/ delivered flat	170
NEW	72-1-4414	304 stainless steel	deburred	67	55	4.5	13	closing spring	170

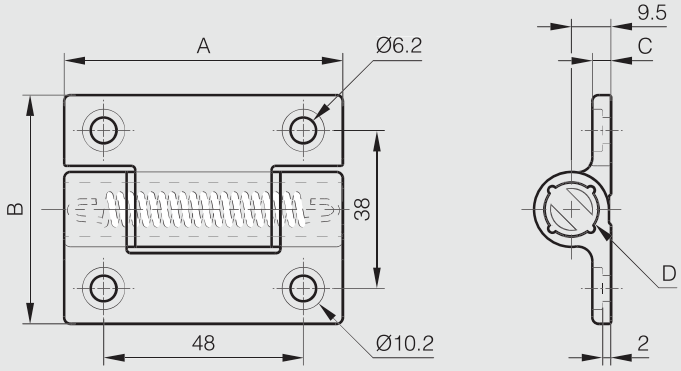

Compact spring hinges 1.6 N.m

NEW

270° STAINLESS STEEL RoHS

Opening spring force:
M(0°) : 1.6 N.m / M(90°) : 1.2 N.m / M(180°) : 0.84 N.m

Closing spring force:
M(0°) : 0.75 N.m / M(90°) : 1.2 N.m / M(180°) : 1.65 N.m

Spring: stainless steel

	Part number	Material	Finish	A	B	C	D	Note	Weight (g)
NEW	71-1-3912	304 stainless steel	raw	85	55	2	5	opening spring / delivered flat	107
NEW	71-1-3914	304 stainless steel	raw	85	55	2	5	closing spring / delivered flat	107

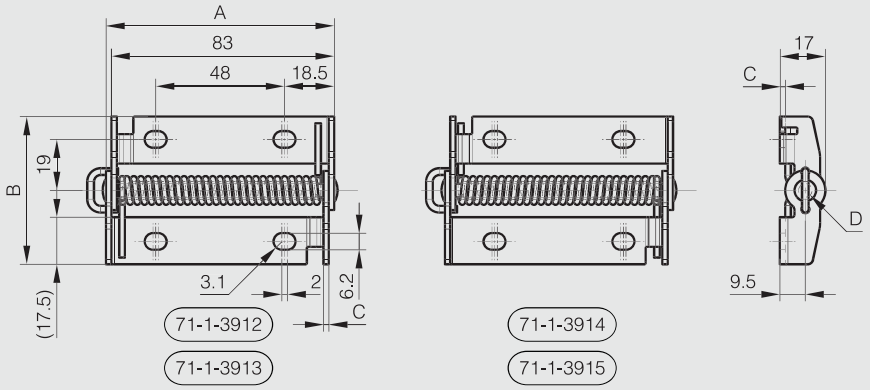

Compact spring hinges 2.2 N.m

NEW

270° STAINLESS STEEL RoHS

Opening spring force:
M(0°) : 2.2 N.m / M(90°) : 1.6 N.m / M(180°) : 1.1 N.m

Closing spring force:
M(0°) : 1.0 N.m / M(90°) : 1.6 N.m / M(180°) : 2.2 N.m

Spring: stainless steel

	Part number	Material	Finish	A	B	C	D	Note	Weight (g)
NEW	71-1-3913	304 stainless steel	raw	85	55	2	5	opening spring / delivered flat	107
NEW	71-1-3915	304 stainless steel	raw	85	55	2	5	closing spring / delivered flat	107

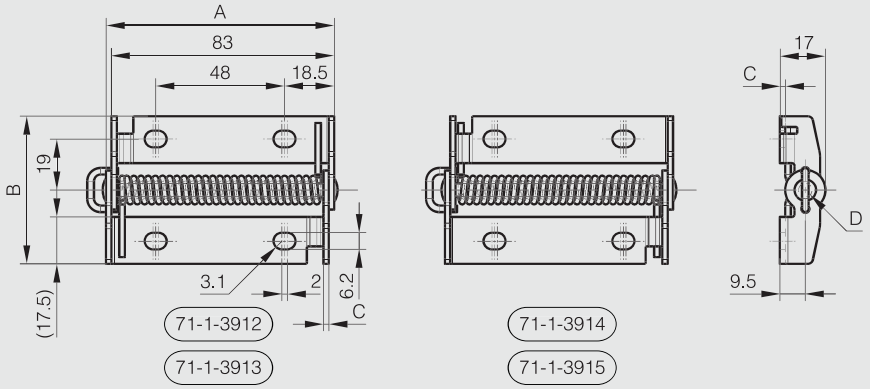

Opening spring hinge 2.2 N.m

Opening spring force:
M(0°): 2.2 N.m / M(90°): 1.7 N.m / M(180°): 1.2 N.m

Pin in 304 stainless steel. Spring in Bezinal steel.

Part number	Material	Finish	A	B	C	D	Weight (g)
71-1-3851	steel	zinc plated	105	80	3	6	239

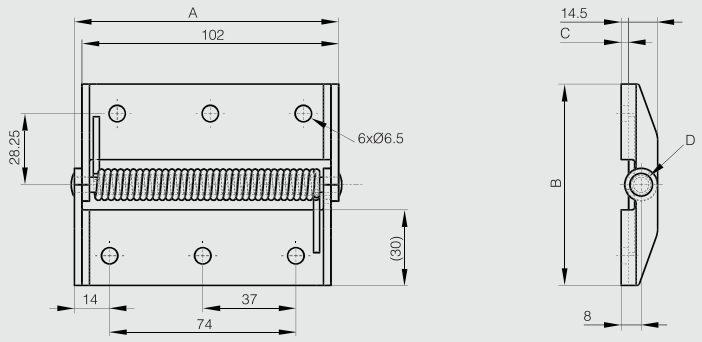

Opening spring hinges 120 mm long

NEW

270° ALU STAINLESS STEEL STEEL RoHS

Opening spring force:
M(0°): 0.85 N.m / M(90°): 0.56 N.m / M(180°): 0.28 N.m
Stainless steel spring.

	Part number	Material	Finish	A	B	C	D	F	G	S	Note	Weight (g)
	71-1-3799	steel	raw	120	40	1.5	4				undrilled	83
	71-1-3805	steel	zinc plated	120	40	1.5	4	22.7	60	4	drilled	83
NS	71-1-3885	steel	zinc plated	120	40	1.5	4	22.7	60	4	with M5 studs	94
	71-1-3860	5754 alu	raw	120	40	1.5	4				undrilled	45
	71-1-3861	5754 alu	raw	120	40	1.5	4	22.7	60	4	drilled	45
NS	71-1-3887	5754 alu	raw	120	40	1.5	4	22.7	60	4	with M5 studs	57
	71-1-3787	304 stainless steel	raw	120	40	1.5	4				undrilled	83
	71-1-3793	304 stainless steel	raw	120	40	1.5	4	22.7	60	4	drilled	83
NEW	71-1-3879	304 stainless steel	raw	120	40	1.5	4	22.7	60	4	with M5 studs	94

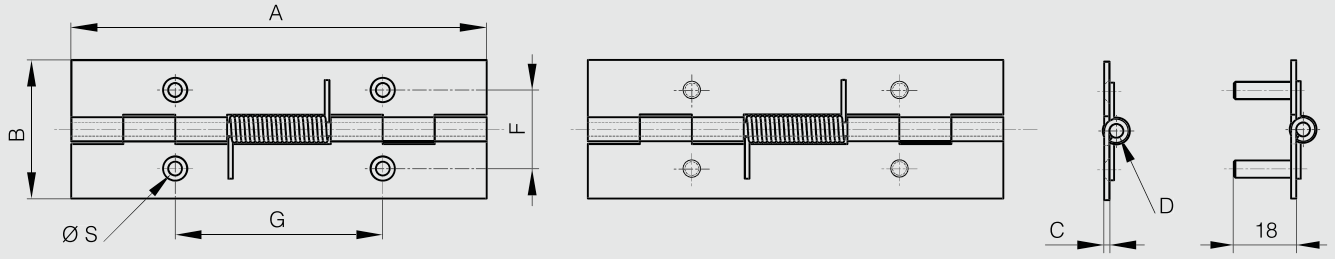

71-1-3793 & 71-1-3805 & 71-1-3861

71-1-3879 & 71-1-3885 & 71-1-3887

Closing spring hinges 120 mm long

NEW

270° ALU STAINLESS STEEL STEEL RoHS

Closing spring force:
M(0°): 0.28 N.m / M(90°): 0.56 N.m / M(180°): 0.85 N.m
Stainless steel spring.

	Part number	Material	Finish	A	B	C	D	F	G	S	Note	Weight (g)
	71-1-3802	steel	raw	120	40	1.5	4				undrilled	82
	71-1-3808	steel	zinc plated	120	40	1.5	4	22.7	60	4	drilled	83
NS	71-1-3886	steel	zinc plated	120	40	1.5	4	22.7	60	4	with M5 studs	94
	71-1-3862	5754 alu	raw	120	40	1.5	4				undrilled	45
	71-1-3863	5754 alu	raw	120	40	1.5	4	22.7	60	4	drilled	45
NS	71-1-3888	5754 alu	raw	120	40	1.5	4	22.7	60	4	with M5 studs	57
	71-1-3790	304 stainless steel	raw	120	40	1.5	4				undrilled	83
	71-1-3796	304 stainless steel	raw	120	40	1.5	4	22.7	60	4	drilled	83
NEW	71-1-3880	304 stainless steel	raw	120	40	1.5	4	22.7	60	4	with M5 studs	94

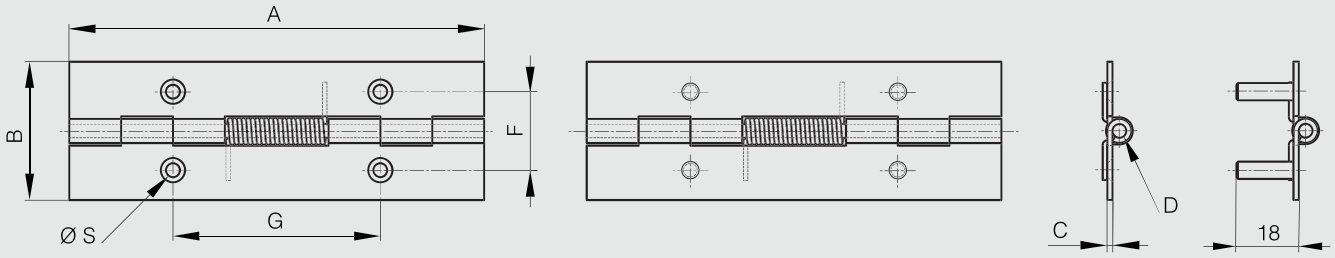

71-1-3796 & 71-1-3808 & 71-1-3863

71-1-3880 & 71-1-3886 & 71-1-3888

Opening spring hinges 180 mm long

NEW

270° STAINLESS STEEL STEEL RoHS

Opening spring force:
M(0°): 1.7 N.m / M(90°): 1.1 N.m / M(180°): 0.56 N.m

Stainless steel spring.

	Part number	Material	Finish	A	B	C	D	F	G	S	Note	Weight (g)
	71-1-3800	steel	raw	180	40	1.5	4				undrilled	124
	71-1-3806	steel	zinc plated	180	40	1.5	4	22.7	60	4	drilled	125
NS	71-1-3890	steel	zinc plated	180	40	1.5	4	22.7	60	4	with M5 studs	142
	71-1-3788	304 stainless steel	raw	180	40	1.5	4				undrilled	124
	71-1-3794	304 stainless steel	raw	180	40	1.5	4	22.7	60	4	drilled	124
NS	71-1-3881	304 stainless steel	raw	180	40	1.5	4	22.7	60	4	with M5 studs	142

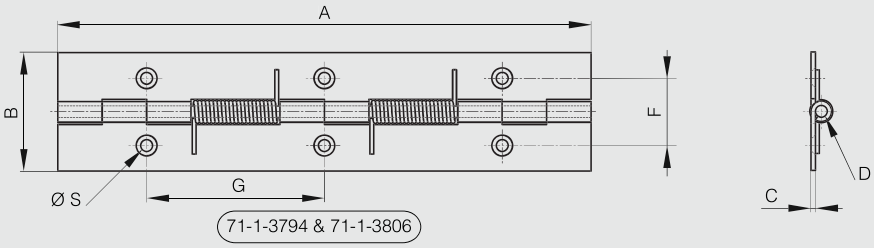

71-1-3794 & 71-1-3806

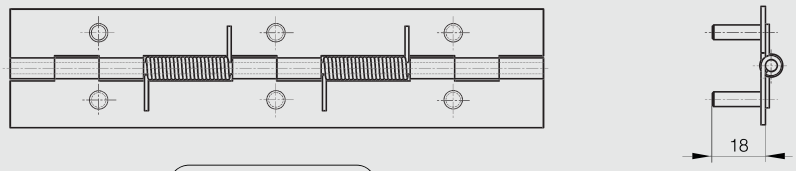

71-1-3881 & 71-1-3890

Closing spring hinges 180 mm long

NEW

270° STAINLESS STEEL STEEL RoHS

Closing spring force:
M(0°): 0.56 N.m / M(90°): 1.1 N.m / M(180°): 1.7 N.m

Stainless steel spring.

	Part number	Material	Finish	A	B	C	D	F	G	S	Note	Weight (g)
	71-1-3803	steel	raw	180	40	1.5	4				undrilled	124
	71-1-3809	steel	zinc plated	180	40	1.5	4	22.7	60	4	drilled	124
NS	71-1-3891	steel	zinc plated	180	40	1.5	4	22.7	60	4	with M5 studs	142
	71-1-3791	304 stainless steel	raw	180	40	1.5	4				undrilled	124
	71-1-3797	304 stainless steel	raw	180	40	1.5	4	22.7	60	4	drilled	124
NS	71-1-3889	304 stainless steel	raw	180	40	1.5	4	22.7	60	4	with M5 studs	142

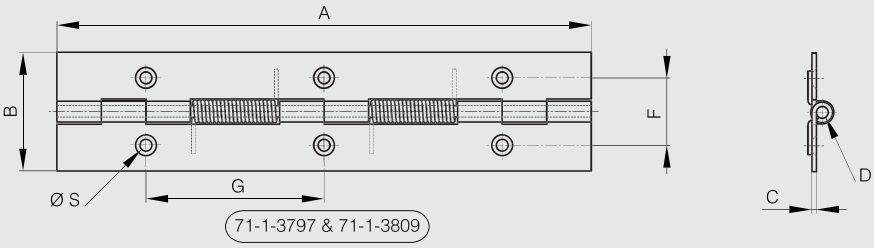

71-1-3797 & 71-1-3809

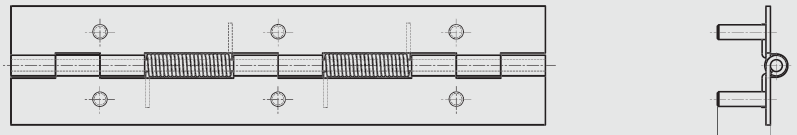

71-1-3889 & 71-1-3891

Opening spring hinges 240 mm long

NEW

270° STAINLESS STEEL STEEL RoHS

Opening spring force:
M(0°): 2.55 N.m / M(90°): 1.68 N.m / M(180°): 0.84 N.m

Stainless steel spring.

	Part number	Material	Finish	A	B	C	D	F	G	S	Note	Weight (g)
	71-1-3801	steel	raw	240	40	1.5	4				undrilled	164
	71-1-3807	steel	zinc plated	240	40	1.5	4	22.7	60	4	drilled	165
NS	71-1-3893	steel	zinc plated	240	40	1.5	4	22.7	60	4	with M5 studs	187
	71-1-3789	304 stainless steel	raw	240	40	1.5	4				undrilled	165
	71-1-3795	304 stainless steel	raw	240	40	1.5	4	22.7	60	4	drilled	164
NS	71-1-3882	304 stainless steel	raw	240	40	1.5	4	22.7	60	4	with M5 studs	187

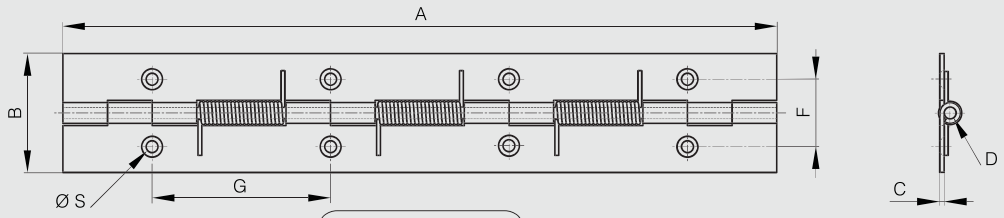

71-1-3795 & 71-1-3807

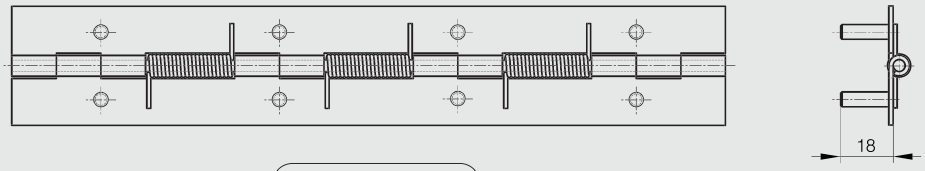

71-1-3882 & 71-1-3893

Closing spring hinges 240 mm long

NEW

270° STAINLESS STEEL STEEL RoHS

Closing spring force:
M(0°): 0.84 N.m / M(90°): 1.68 N.m / M(180°): 2.55 N.m

Stainless steel spring.

	Part number	Material	Finish	A	B	C	D	F	G	S	Note	Weight (g)
	71-1-3804	steel	raw	240	40	1.5	4				undrilled	164
	71-1-3810	steel	zinc plated	240	40	1.5	4	22.7	60	4	drilled	164
NS	71-1-3894	steel	zinc plated	240	40	1.5	4	22.7	60	4	with M5 studs	187
	71-1-3792	304 stainless steel	raw	240	40	1.5	4				undrilled	165
	71-1-3798	304 stainless steel	raw	240	40	1.5	4	22.7	60	4	drilled	164
NS	71-1-3792	304 stainless steel	raw	240	40	1.5	4	22.7	60	4	with M5 studs	187

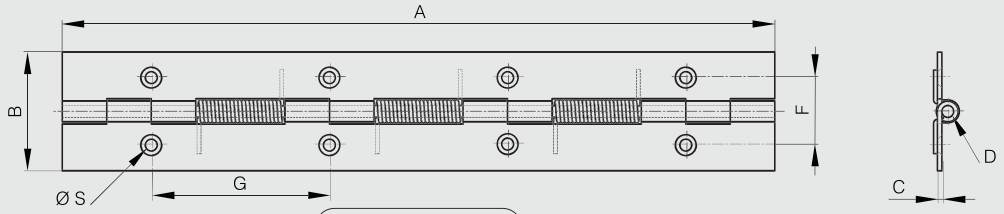

71-1-3798 & 71-1-3810

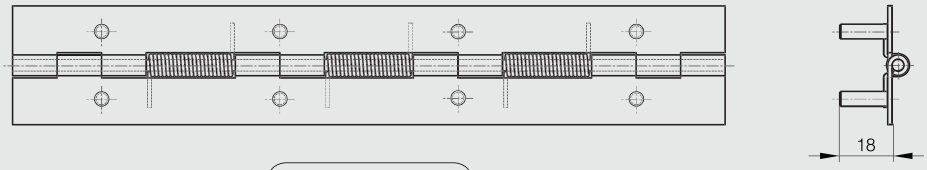

71-1-3892 & 71-1-3894

Spring hinges 50 mm long

270° ALU STAINLESS STEEL STEEL RoHS

Opening spring force:
M(0°): 1.5 N.m / M(90°): 1.1 N.m / M(180°): 0.65 N.m

Closing spring force:
M(0°): 0.25 N.m / M(90°): 0.65 N.m / M(180°): 1.1 N.m

Part number	Material	Finish	A	B	C	D	F	G	S	Note	Weight (g)
71-1-3519	steel	zinc plated	50	50	2	4	9	30	5	stainless steel opening spring	50
71-1-3619	steel	zinc plated	50	50	2	4	9	30	5	stainless steel closing spring	50
71-1-3856	5754 alu	raw	50	50	2	4	9	30	5	Bezinal steel opening spring	22
71-1-3857	5754 alu	raw	50	50	2	4	9	30	5	Bezinal steel closing spring	22
71-1-3553	304 stainless steel	raw	50	50	2	4	10	30	5	stainless steel opening spring	50
71-1-3586	304 stainless steel	raw	50	50	2	4	10	30	5	stainless steel closing spring	50

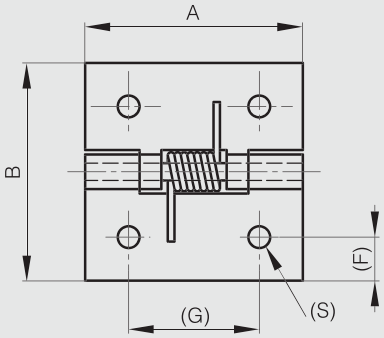

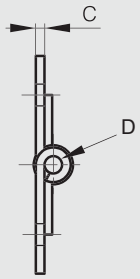

Spring hinges 60 mm long - with 2 holes

270° STEEL RoHS

Opening spring force:
M(0°): 0.09 N.m / M(90°): 0.07 N.m / M(180°): 0.045 N.m

Closing spring force:
M(0°): 0.045 N.m / M(90°): 0.07 N.m / M(180°): 0.09 N.m

Part number	Material	Finish	A	B	C	D	F	G	S	Note	Weight (g)
71-1-3579	steel	raw	60	35	1	3	7.5	35	5	stainless steel opening spring	22
71-1-3617	steel	raw	60	35	1	3	7.5	35	5	stainless steel closing spring	23

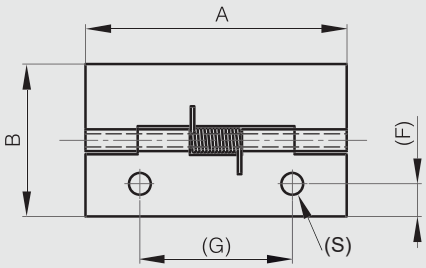

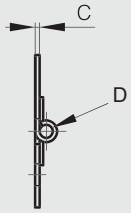

Spring hinge 60 mm long - with 4 holes

Opening spring force:
M(0°): 0.11 N.m / M(90°): 0.09 N.m / M(180°): 0.07 N.m

Part number	Material	Finish	A	B	C	D	F	G	S1	S2	Note	Weight (g)
71-1-3560	430 stainless steel	raw	60	35	1	3	7.5	35	3.1	5	stainless steel opening spring	22

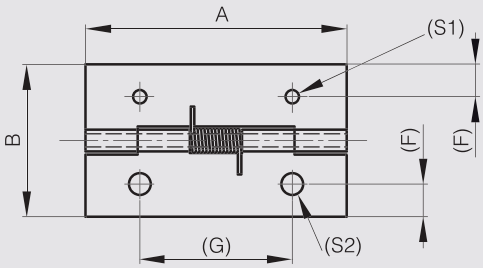

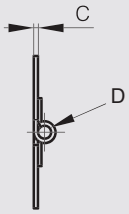

Spring hinges 75 mm long - drilled

Opening spring force:
M(0°): 0.12 N.m / M(90°): 0.09 N.m / M(180°): 0.06 N.m

Part number	Material	Finish	A	B	C	D	F	G	S	Note	Weight (g)
71-1-3305	steel	raw	75	20	0.8	2	11.2	60	2.8	stainless steel opening spring	12
71-1-3582	304 stainless steel	raw	75	20	0.8	2	11.2	60	2.8	stainless steel opening spring	12

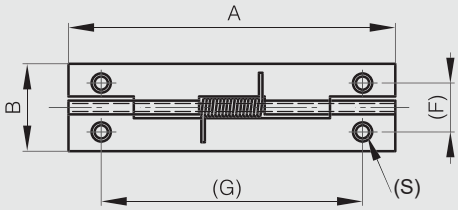

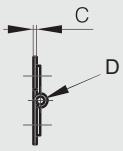

Spring hinges 75 mm long - undrilled

Opening spring force:
M(0°): 0.12 N.m / M(90°): 0.095 N.m / M(180°): 0.07 N.m

Part number	Material	Finish	A	B	C	D	Note	Weight (g)
71-1-3309	steel	raw	75	30	0.8	2	stainless steel opening spring	18
71-1-3583	304 stainless steel	raw	75	30	0.8	2	stainless steel opening spring	19

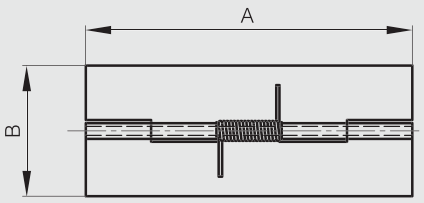

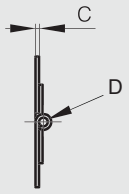

Spring hinges 80 mm long

Opening spring force:
M(0°): 0.17 N.m / M(90°): 0.12 N.m / M(180°): 0.065 N.m

Part number	Material	Finish	A	B	C	D	F	G	S	Note	Weight (g)
71-1-3578	304 stainless steel	raw	80	23.5	1	3	4.5	60	4	stainless steel opening spring	25
71-1-3304	430 stainless steel	raw	80	23.5	1	3	4.5	60	4	stainless steel opening spring	25

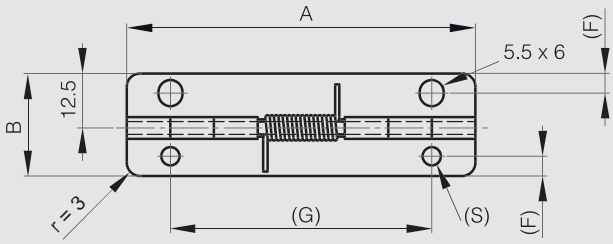

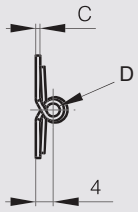

Spring hinges 160 mm long

Opening spring force for part numbers 71-1-3580 and 71-1-3581:
M(0°): 0.9 N.m / M(90°): 0.86 N.m / M(180°): 0.6 N.m

Closing spring force for part numbers 71-1-3618 and 71-1-3835:
M(0°): 0.12 N.m / M(90°): 0.44 N.m / M(180°): 0.55 N.m

Punched pin.

Part number	Material	Finish	A	B	C	D	F	G	S	Note	Weight (g)
71-1-3580	steel	raw	160	46	3	6.5	30	70	4.2	stainless steel opening spring	208
71-1-3618	steel	raw	160	46	3	6.5	30	70	4.2	stainless steel closing spring	208
71-1-3581	304 stainless steel	raw	160	46	3	6.5	30	70	4.2	stainless steel opening spring	208
71-1-3835	304 stainless steel	raw	160	46	3	6.5	30	70	4.2	stainless steel closing spring	208

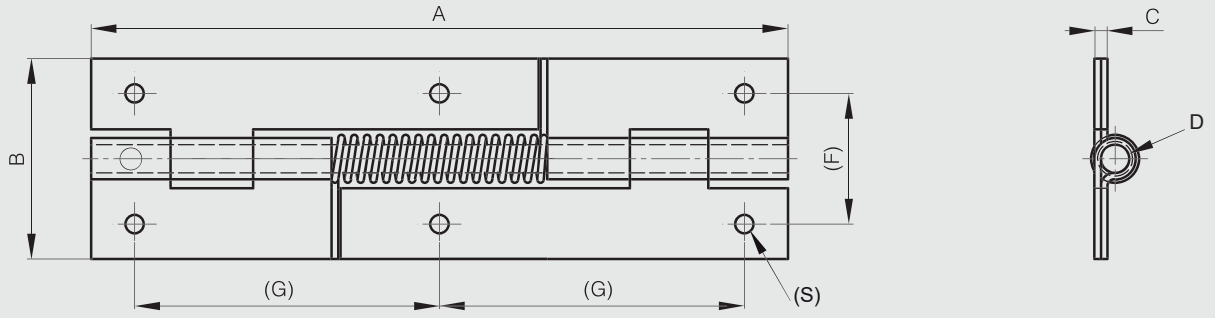

Spring hinges 170 mm long

Opening spring force:
M(0°): 0.24 N.m / M(90°): 0.19 N.m / M(180°): 0.14 N.m

Part number	Material	Finish	A	B	C	D	Note	Weight (g)
71-1-3303	steel	raw	170	30	0.8	2	stainless steel opening spring	41
71-1-3522	304 stainless steel	raw	170	30	0.8	2	stainless steel opening spring	42

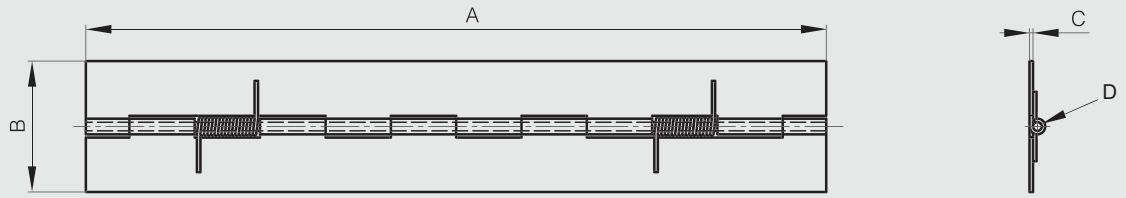

Cranked spring hinge 66 mm long

Spring force:
M (0°): 0.07 N.m / M (90°): 0.22 N.m / M (180°): 0.38 N.m

Part number	Material	Finish	A	B	C	D	Note	Weight (g)
71-1-3649	316 stainless steel	brightened	66	22.5	1.5	4	closing spring	39

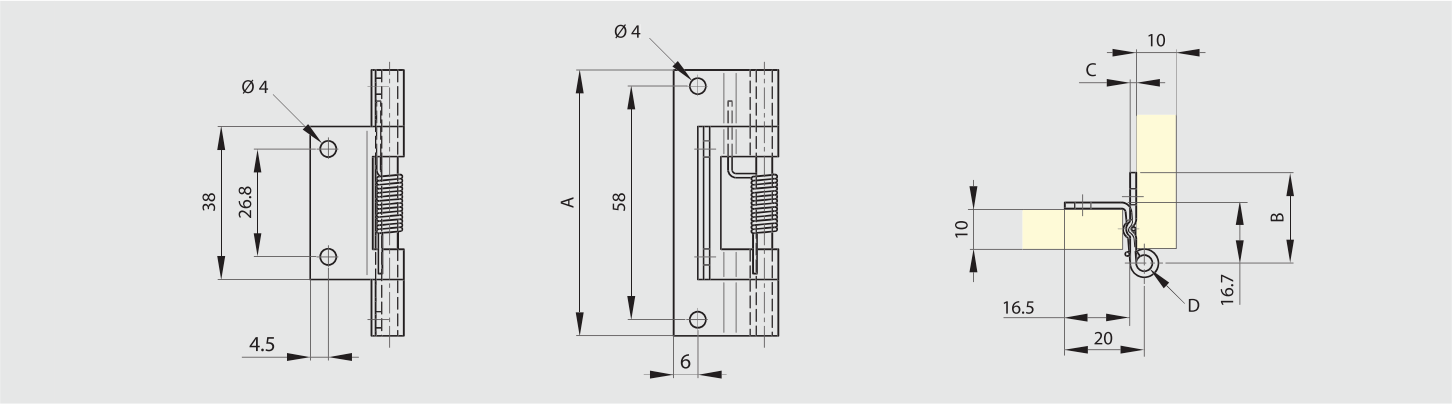

Cranked spring hinge 60 mm long

Spring force:
M (0°): 0.03 N.m / M (90°): 0.16 N.m / M (180°): 0.32 N.m

Part number	Material	Finish	A	B	C	D	Note	Weight (g)
71-1-3622	316 stainless steel	raw	60	30	1.5	3	closing spring	40

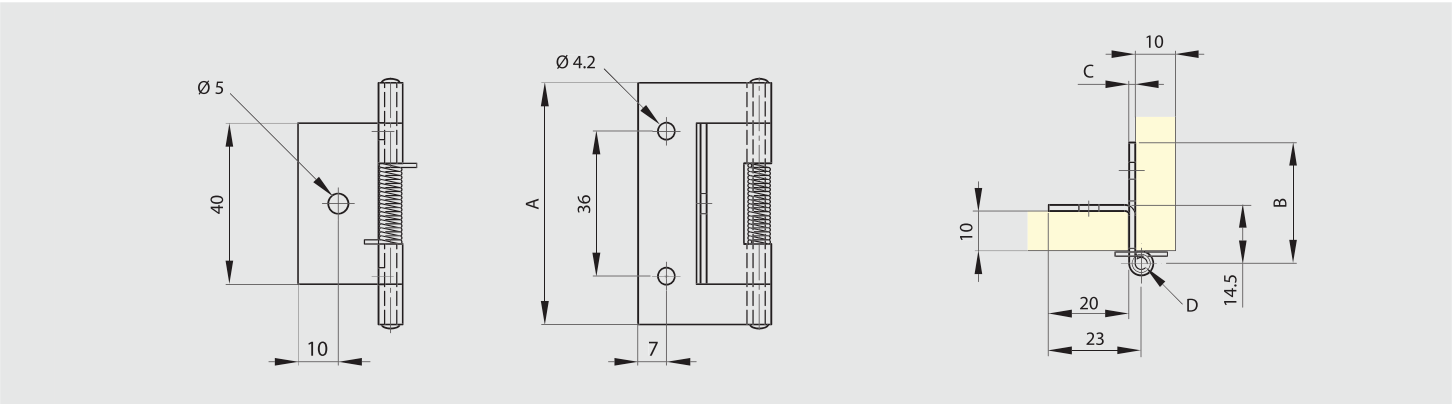

Spring loaded lift-off hinges for doors

Hinges with integrated spring system, sold in pairs.
Brass washer.
Shuts door automatically.
Resistance of the spring: 500 000 cycles. Adjustable spring system.
Opening angle 180°.

Part number	Material	Finish	A	B	D	Weight (g)
14-7-3745	steel	raw	250	25	22	592

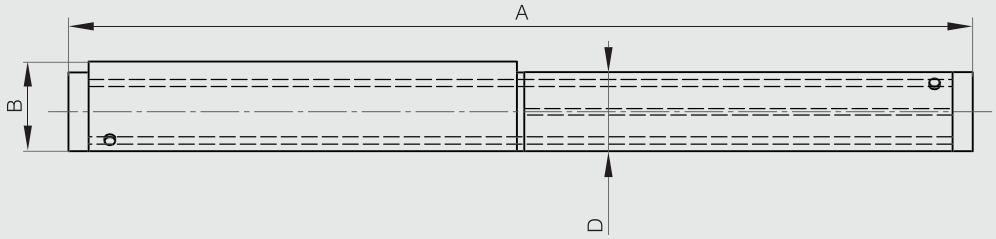

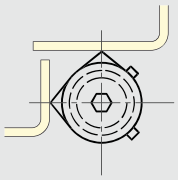

Lift-off rising hinge in stainless steel

Ramp integrated in the pin allows automatic closing by gravity.

Part number	Material	Finish	A	B	C	D	Note	Weight (g)
14-1-3886	304 stainless steel	brushed	80	80	3	8	type 2	216
14-1-3892	304 stainless steel	brushed	80	80	3	8	type 1	216

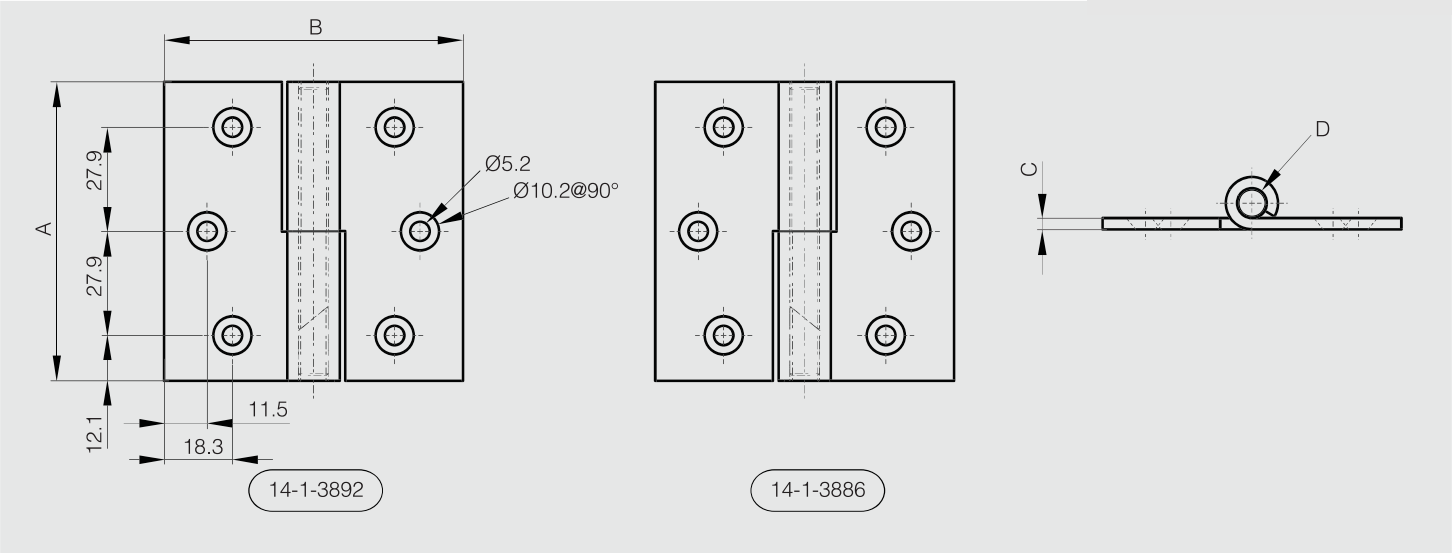

Spring-assist torque hinge

NEW

100° STAINLESS STEEL RoHS

The built-in spring makes lids feel lighter to open (the hinge is for top-opening lids).
The retaining torque is adjustable with a hex key (0 to 3.5 N.m).
Cycling resistance: 50,000 cycles.
Operating temperature: 0°/+40°C.

The hinge is delivered with a pin attached. It keeps the hinge open.
Please do not detach until the hinge is installed.

Optional cover is sold separately (22-7-3556).

	Part number	Material	Finish	A	B	Spring torque	Weight (g)
NEW	71-7-3910	304 stainless steel	polished	70	66	2.2 - 2.9 N.m	218
NEW	71-7-3911	304 stainless steel	polished	70	66	3.5 - 4.4 N.m	222

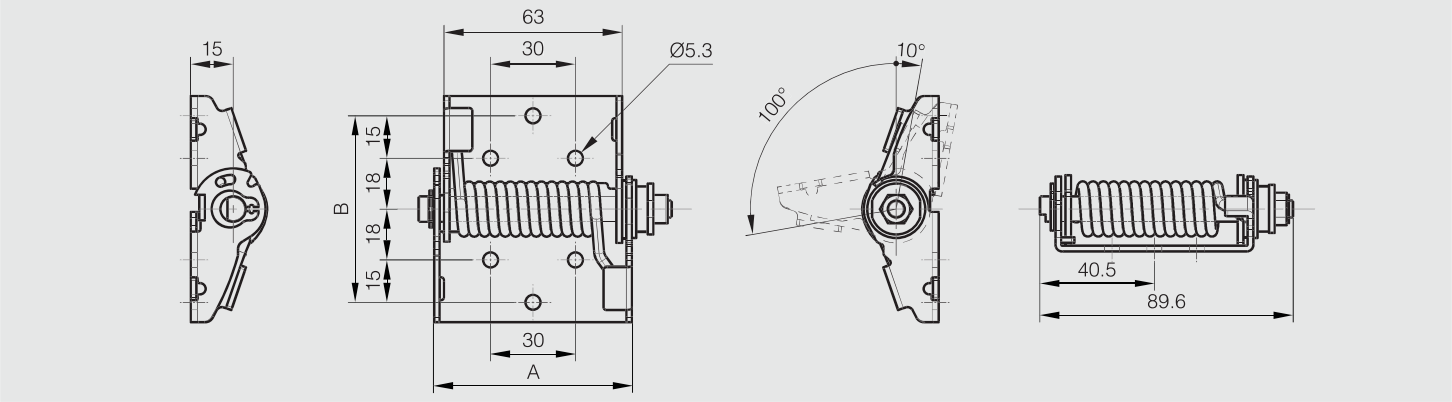

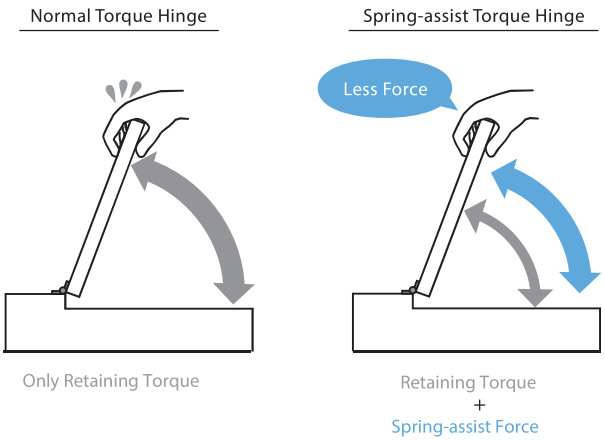

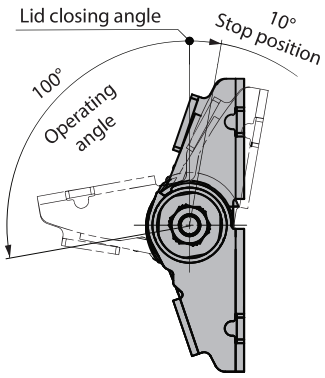

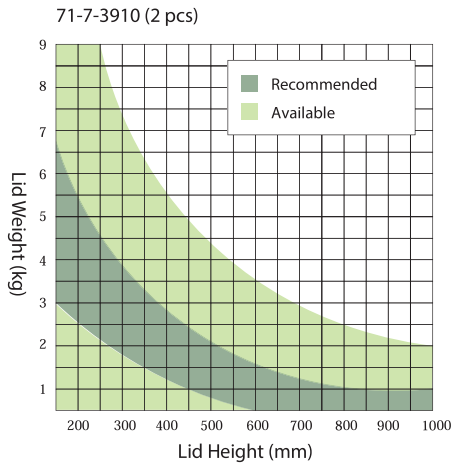

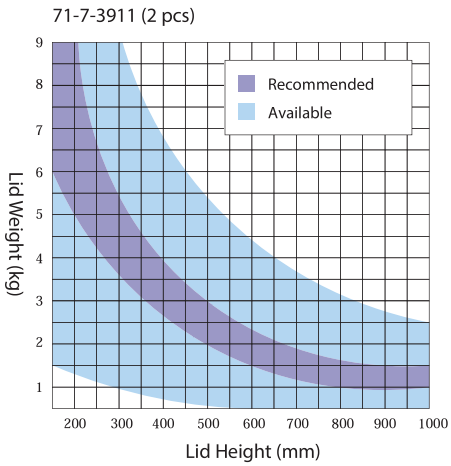

Available Range
- Free-stop: 0° to 100°

Recommended Range
- Free-stop: 0° to 100°
- Moves very llightly: 1° to 99°

* Spring-assisted lid moment is close to 0 N.m.

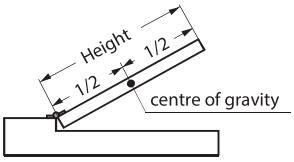

Calculation Condition:
The centre of gravity is at the centre of the lid.

Cover for spring-assist torque hinge

Cover spring-assist torque hinges 71-7-3910 and 71-7-3911.

	Part number	Material	Finish	A	B	Weight (g)
NEW	22-7-3556	PBT	white	90.4	90	41

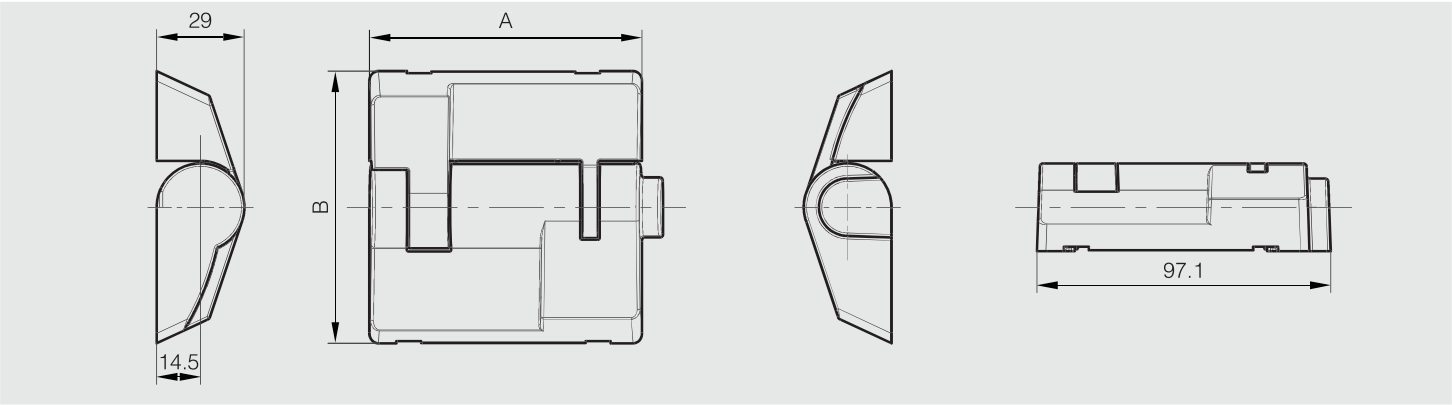

Balance-adjustable lift-assist hinge

NEW 100° STAINLESS STEEL RoHS

Easy to lift heavy top-opening lids due to spring tension (lift-assist).
A built-in damper prevent lids from slamming shut (soft-close).
Adjustable torque by turning a screw (+/-10%).
Designed for horizontal applications with top-opening / upward-opening lids and doors.
Included : a plastic cover for clean appearance.

	Part number	Material	Finish	A	B	C	Torque	Weight (g)
NEW	75-7-0012	430 stainless steel	light grey	180	276	52.7	15 N.m	3400

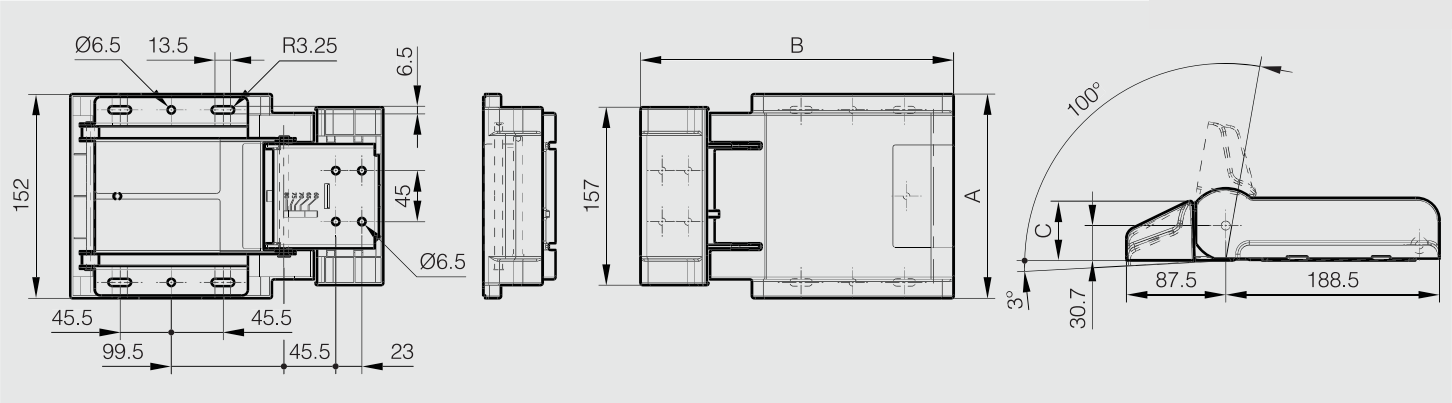

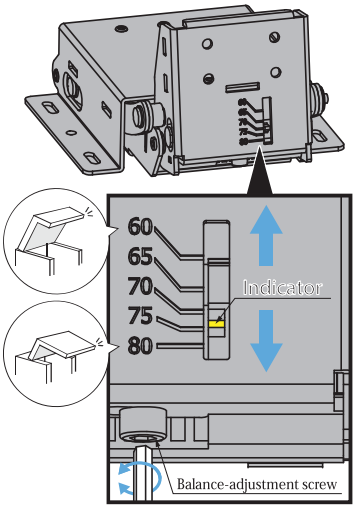

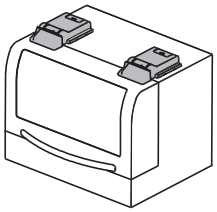

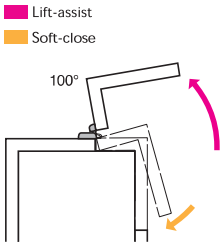

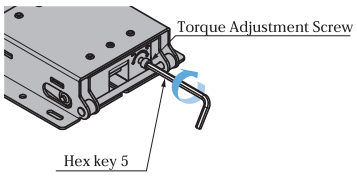

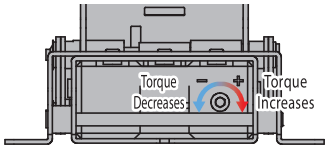

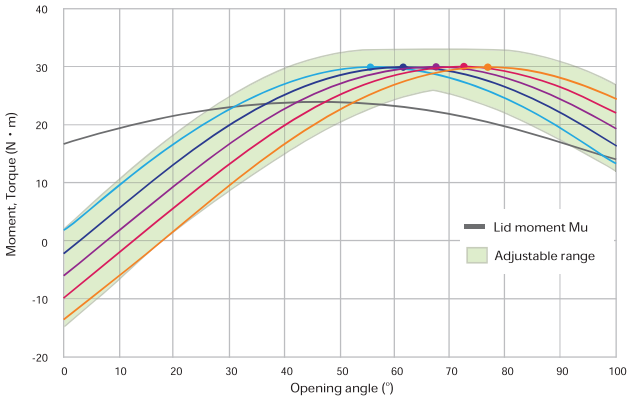

[Indicator's Scale]
60 65 70 (default) 75 80 ● Angle of peak torque

Lid moment Mu > Hinge torque・・・Force is applied in the closing direction of lid.
Lid moment Mu < Hinge torque・・・Force is applied in the opening direction of lid.
Lid specs (example) : X=170mm Y=175mm L=244mm m=8.6kg
(Setting the indicator to 60 is the right adjustment in this case.)

Calculation formula $Mu = m \times L \times \cos\theta$

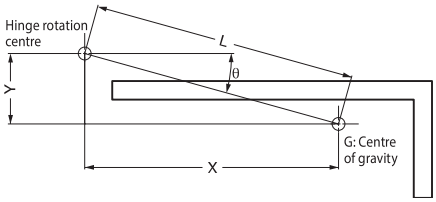

Spring hinges with soft-close dampening

NEW

115° ALU RoHS

2 versions : opening spring version (75-1-0008) or closing spring version (75-1-0009).
For horizontal application.
Easy to lift heavy top-opening due to spring tension (lift-assist).

- Damper working direction: shown by the arrow in the drawing.
- In order not to damage the damping system, the opening angle is limited to 115° by an integrated stop.
- Do not force the door to close faster in damper effective direction. It can cause damage to the product.
- Damping works correctly when the door is opened more than 90 ° before being released (priming).

- Torque damping from 1.7 to 2.5 N.m.
- Spring torque is different depending on part number :
Opening spring torque for 75-1-0008 : M(180°) : 2.70 Nm / M(65°) : 3.69 Nm
Closing spring torque for 75-1-0009 : M(0°) : 2.68 Nm / M(115°) : 3.65 Nm

- Operating temperature: 0 to +40°C.

Please contact us for more information.

	Part number	Material	Finish	A	B	C	D	Torque	Note	Weight (g)
NEW	75-1-0008	6082 T5 Alu	clear anodised	150	82.5	5.5	18	1.7 – 2.5 N.m	opening spring	32
NEW	75-1-0009	6082 T5 Alu	clear anodised	150	82.5	5.5	18	1.7 – 2.5 N.m	closing spring	32

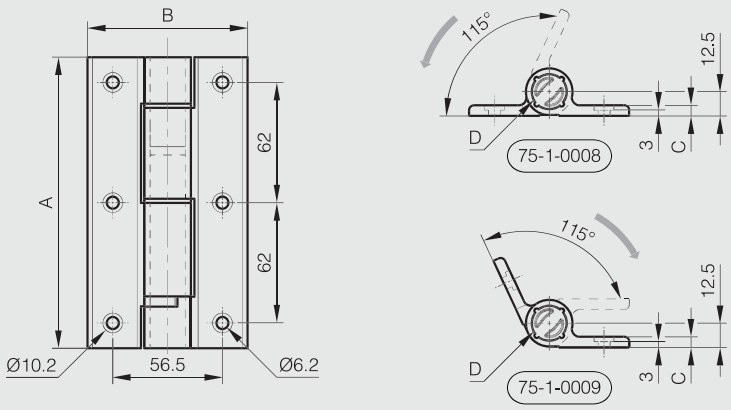

Soft close hinges for vertical application

NEW

180° POLYMER RoHS

Closing speed of doors is adjustable with a hex key.
Comes with seft-close function which can hold doors closed.
Please use with stoppers to prevent doors from opening over 180°.
Cycling resistance: 50,000 cycles
Operating temperature: 0 to +40°C
Screw cover (included)

	Part number	Material	Finish	A	B	C	Weight (g)
NEW	75-7-0010	polyamide	black	65	68.5	17	85
NEW	75-7-0011	polyamide	light grey	65	68.5	17	85

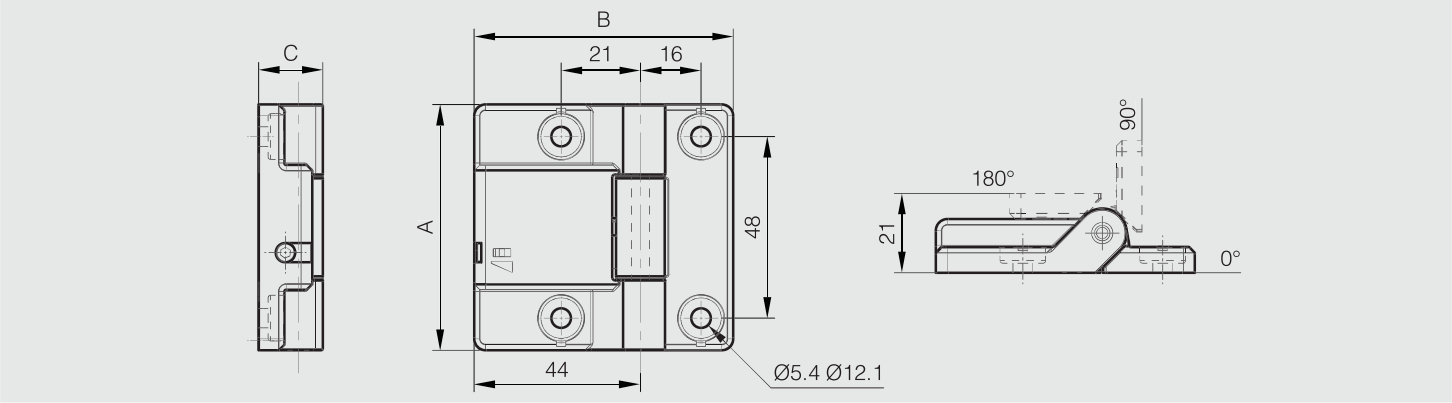

Free
Soft and self closing

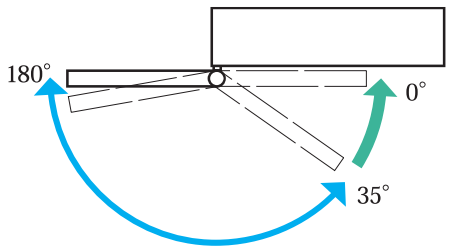

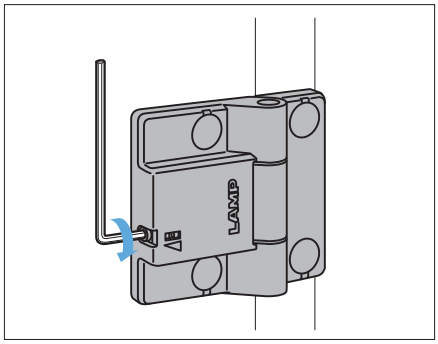

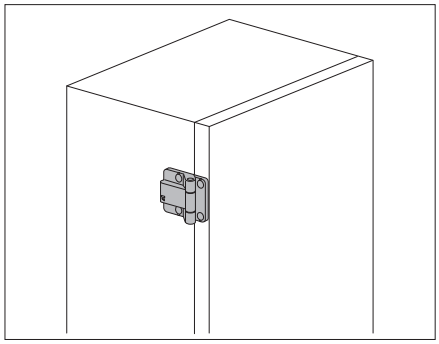

Soft-close dampening hinges in aluminium

NEW

115° ALU RoHS

- Soft-close dampening hinge: soft-close damper keeps lid from slamming shut when the hinge is moved.
- Damper working direction: shown by the arrow in the drawing.
- Operating angle: 115°.
- If the opening angle is wider than 115° (+/- 5°), mechanism is broken and damper doesn't work any longer.
- **Provide a door stopper to prevent from overturning beyond the prescribed angle range.**
- Do not force the door to close faster in damper effective direction. It can cause damage to the product.
- When the door opening angle is small, the dampers may not work smoothly.
- Torque moment (for one hinge): 2.5 to 4.5 N.m.
- Torque calculation:

Torque (N.m) = L (m) x 1/2 x W (kg) x 9.8 with:

- L = door height in metre.
- W = door weight in kilo.

- Operating temperature: 0 to +40°C.
- Soft close of a door (vertical application): door closing system.

Put together with a spring hinge with same dimension (72-1-4231 or 72-1-4232), an automatic soft close of a door is possible without any other component.
Please ask us for more information.

	Part number	Material	Finish	A	B	C	D	Torque	Note	Weight (g)
	75-1-0004	6082 T5 alu	clear anodised	100	82.5	5.5	18	2.5 - 4.5 N.m	Damper working direction when opening the hinge	175
	75-1-0006	6082 T5 alu	clear anodised	100	82.5	5.5	18	2.5 - 4.5 N.m	Damper working direction when closing the hinge	175
NEW	75-1-0007	6082 T5 alu	clear anodised	100	82.5	5.5	18	2.5 - 4.5 N.m	Damper working direction when closing the hinge	179

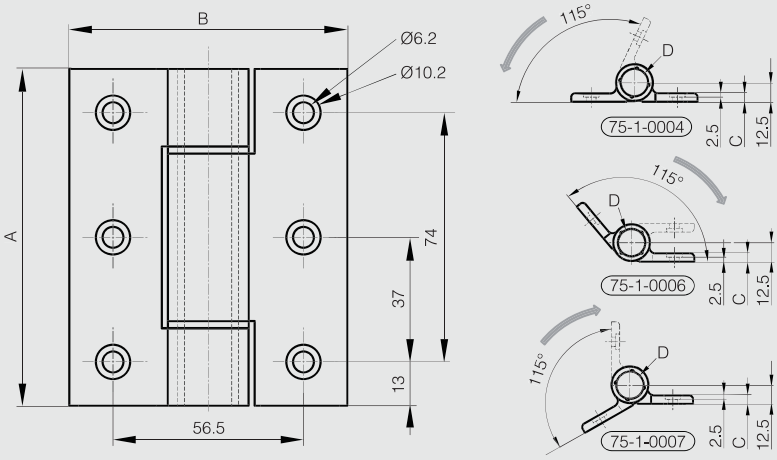

Soft-close dampening hinge in stainless steel

115° STAINLESS STEEL RoHS

- Soft-close dampening hinge: soft-close damper keeps lid from slamming shut when the hinge is put in the closed position.
- Damper working direction: shown by the arrow in the drawing.
- Operating angle: 115°.
- Do not force the door to close faster in damper effective direction. It can cause damage to the product.
- When the door opening angle is small, the dampers may not work smoothly.
- Torque moment (for one hinge): 2.2 to 3.0 N.m.
- Torque calculation:

Torque (N.m) = L (m) x 1/2 x W (kg) x 9.8 with:

• L = door height in metre.
• W = door weight in kilo.

- Operating temperature: 0 to + 40°C.
- Soft close of a door (vertical application): door closing system.

Please ask us for more information.

Part number	Material	Finish	A	B	C	D	Torque	Note	Weight (g)
75-1-0003	304 stainless steel	raw	80	40	3	16	2.2 - 3.0 N.m	Damper working direction when closing the hinge	300

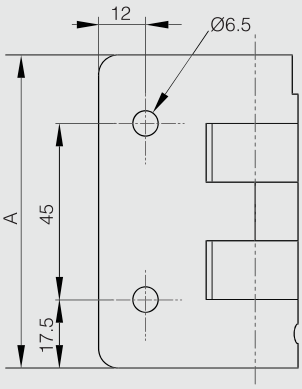

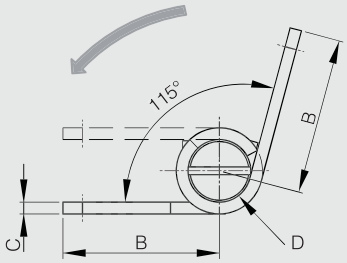

Soft-close dampening hinges in plastic

115° POLYMER RoHS

- Soft close dampening hinge: soft-close damper keeps lid from slamming shut.
- Operating angle: 115°.
- If the opening angle is wider than 115° (+/- 5°), mechanism is broken and damper doesn't work any longer.
- **Provide a door stopper to prevent from overturning beyond the prescribed angle range.**
- Do not force the door to close faster in damper effective direction. It can cause damage to the product.
- When the door opening angle is small, the dampers may not work smoothly.
- Torque moment (pair): 10 to 14 N.m.
- Torque calculation:

Torque (N.m) = L (m) x 1/2 x W (kg) x 9.8 with:

• L = door height in metre.
• W = door weight in kilo.

- Operating temperature: 0 to +40°C
- 2 damper working directions available:

• part number 54-7-3543: damper working direction when opening the hinge (as shown by the arrow on the drawing).
• part number 54-7-3544: damper working direction when closing the hinge (not shown).

- Mounting examples: see drawings.

Part number	Material	Finish	A	B	C	D	Torque	Note	Weight (g)
54-7-3543	polymer	dark grey	115	72	26.5	26	5 - 7 N.m	Damper working direction when opening the hinge: hinge without marking color (backside)	182
54-7-3544	polymer	dark grey	115	72	26.5	26	5 - 7 N.m	Damper working direction when closing the hinge: hinge with red marking color (backside)	184

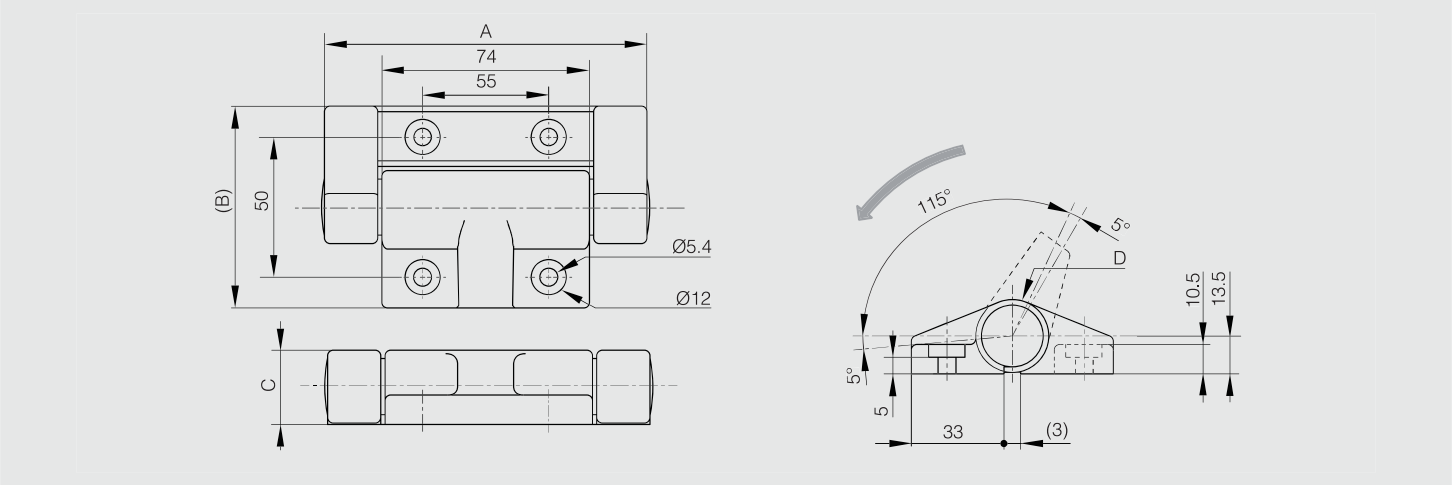

Damper working direction when opening the hinge

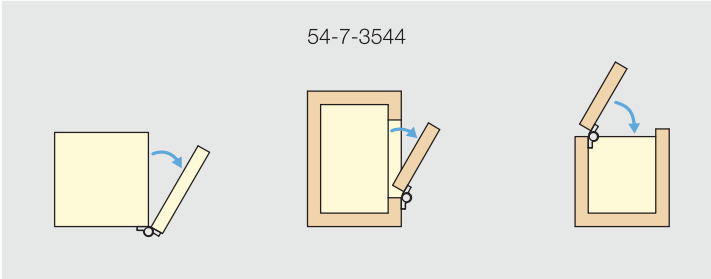

Damper working direction when closing the hinge

Soft-close dampening lift-off hinge

NEW

115° POLYMER RoHS

- Soft close dampening lift-off hinges: soft-close damper keeps lid from slamming shut.
- Sold in pairs (type 1 and type 2).
- Lift-off hinge type 1 has a grey shaft and the damper working direction is clockwise.
- Lift-off hinge type 2 has a white shaft and the damper working direction is counter-clockwise (shown on the drawing).
- Operating angle: 115°.
- If the opening angle is wider than 115° (+/- 5°), mechanism is broken and damper doesn't work any longer.
- **Provide a door stopper to prevent from overturning beyond the prescribed angle range.**
- Do not force the door to close faster in damper effective direction. It can cause damage to the product.
- When the door opening angle is small, the dampers may not work smoothly.
- Torque moment (pair):
• 3 to 5 N.m for part number 12-7-4280.
• 5 to 7 N.m for part number 12-7-4241.
- Torque calculation:
Torque (N.m) = L (m) x 1/2 x W (kg) x 9.8 with:
• L = door height in metre.
• W = door weight in kilo.
- Operating temperature: 0 to +40°C.

	Part number	Material	Finish	A	B	C	D	Torque	Note	Weight (g)
NEW	12-7-4280	polymer	dark grey	75	80	26.5	26	3 - 5 N.m / pair	sold in pairs	180
	12-7-4241	polymer	dark grey	75	60	26.5	26	5 - 7 N.m / pair	sold in pairs	180

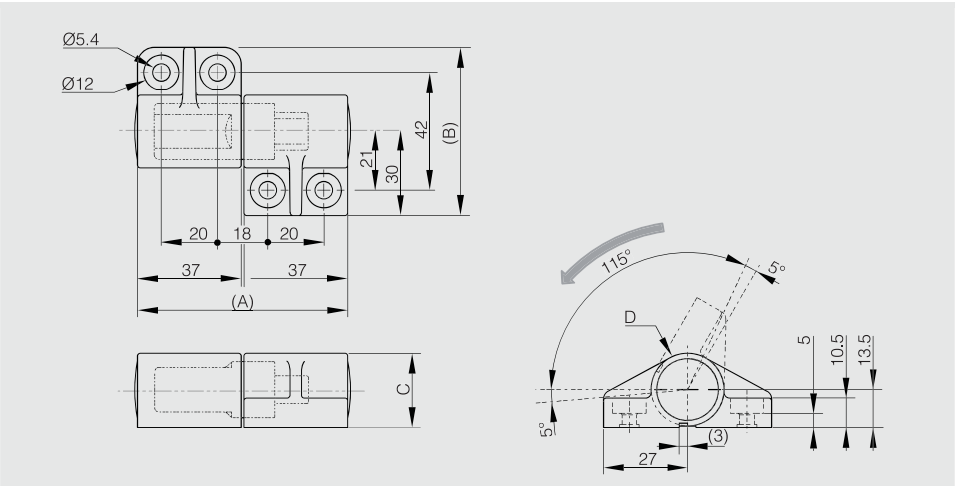

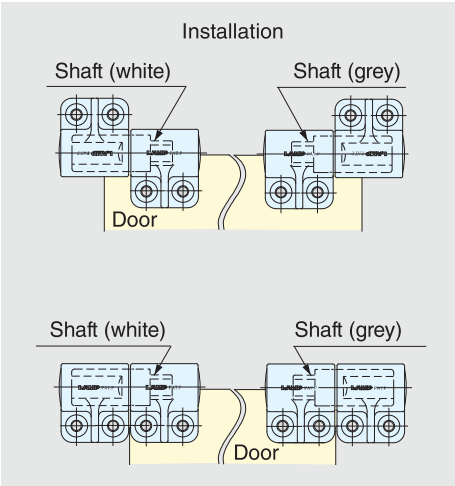

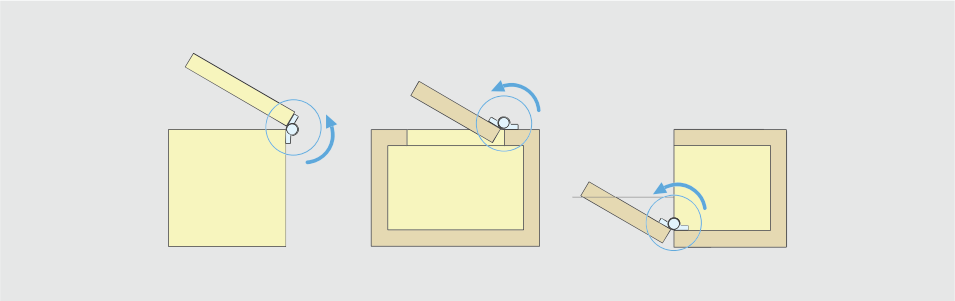

Small friction hinges - adjustable

180° ALU RoHS

Small size friction hinge to maintain a lid / door in position.
The friction torque is adjustable with a hex key.
2 other versions available: with spring or with detent function.

Part number	Material	Finish	A	B	C	D	S	Torque	Weight (g)
72-1-4136	6060 T5 alu	raw	30	35	3.3	8	3.5	0 - 1 N.m	11
72-1-4160	6060 T5 alu	clear anodised	30	35	3.3	8	3.5	0 - 1 N.m	11
72-1-4137	6060 T5 alu	black anodised	30	35	3.3	8	3.5	0 - 1 N.m	11

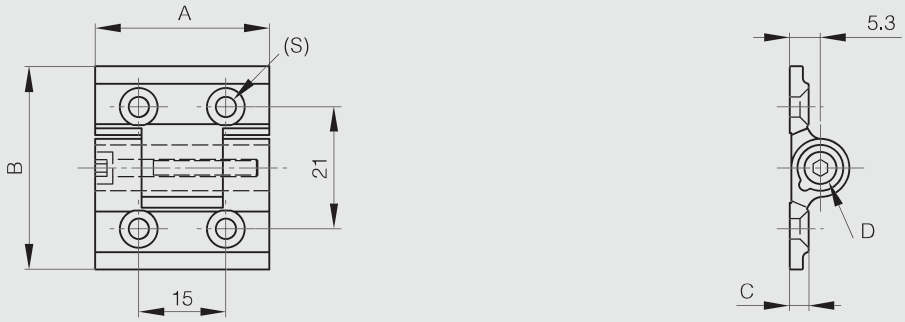

Large friction hinges - adjustable

NEW

180° ALU RoHS

Large size friction hinge to maintain a lid / door in position.
The friction torque is adjustable with a hex key.
Available with a choice of studs or holes.
3 other versions available: with spring, with detent function or free swinging.

	Part number	Material	Finish	A	B	C	D	Torque	Note	Weight (g)
	72-1-4145	6060 T5 alu	clear anodised	65	55	4.5	13	0 - 5 N.m	fixing by screw CHC M6	68
	72-1-4146	6060 T5 alu	black anodised	65	55	4.5	13	0 - 5 N.m	fixing by screw CHC M6	68
	72-1-4147	6060 T5 alu	clear anodised	65	55	4.5	13	0 - 5 N.m	fixing by M6 studs	85
	72-1-4148	6060 T5 alu	black anodised	65	55	4.5	13	0 - 5 N.m	fixing by M6 studs	85
NS	72-1-4362	6060 T5 alu	blue anodised	65	55	4.5	13	0 - 5 N.m	fixing by screw CHC M6	66
NS	72-1-4363	6060 T5 alu	red anodised	65	55	4.5	13	0 - 5 N.m	fixing by screw CHC M6	66
NS	72-1-4364	6060 T5 alu	bronze anodised	65	55	4.5	13	0 - 5 N.m	fixing by screw CHC M6	66
NS	72-1-4365	6060 T5 alu	gold anodised	65	55	4.5	13	0 - 5 N.m	fixing by screw CHC M6	66

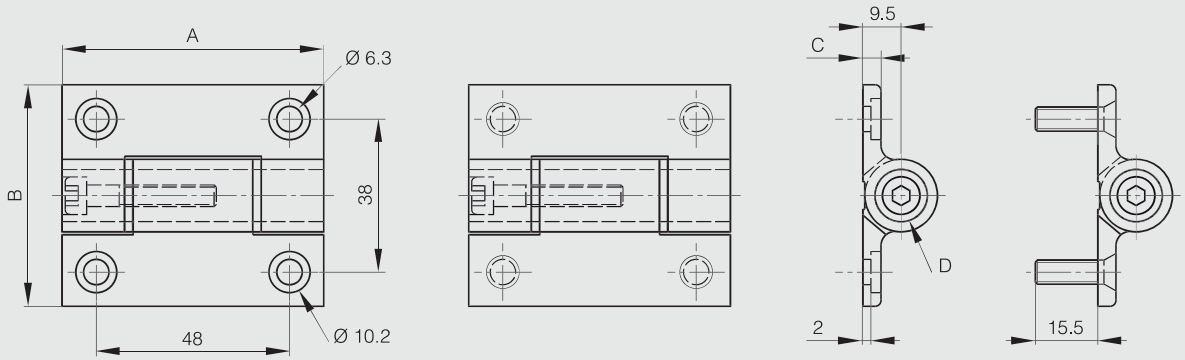

Hinges with or without friction in stainless steel - friction torque 3 N.m

NEW

180° STAINLESS STEEL RoHS

Constant torque. Stable at various temperatures. (from -40°C to +80°C)
Pin in stainless steel.
Plugs in polyethylene.

	Part number	Material	Finish	A	B	C	D	Torque	Pin material	Note	Weight (g)
NEW	62-1-3719	301 stainless steel	raw	85	55	2	8	3 N.m	stainless steel	with friction	121
	62-1-3711	304 stainless steel	raw	85	55	2	8		304 stainless steel	no torque	122

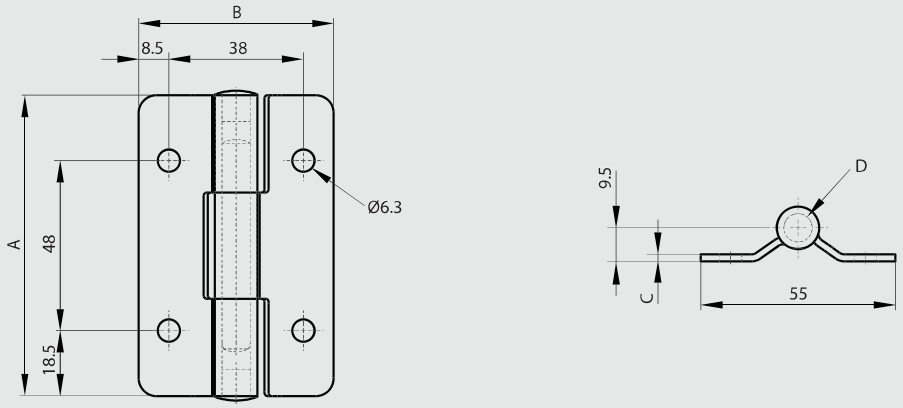

Hinges with or without friction in stainless steel - friction torque 4.5 N.m

NEW

180° STAINLESS STEEL RoHS

Constant torque. Stable at various temperature (from -40°C to +80°C)
Pin in stainless steel.
Plugs in polyethylene.

	Part number	Material	Finish	A	B	C	D	Torque	Pin material	Note	Weight (g)
NEW	62-1-3747	301 stainless steel	raw	115	55	2	8	4.5 N.m	stainless steel	with friction	170
NEW	62-1-3748	304 stainless steel	raw	115	55	2	8		304 stainless steel	no torque	170

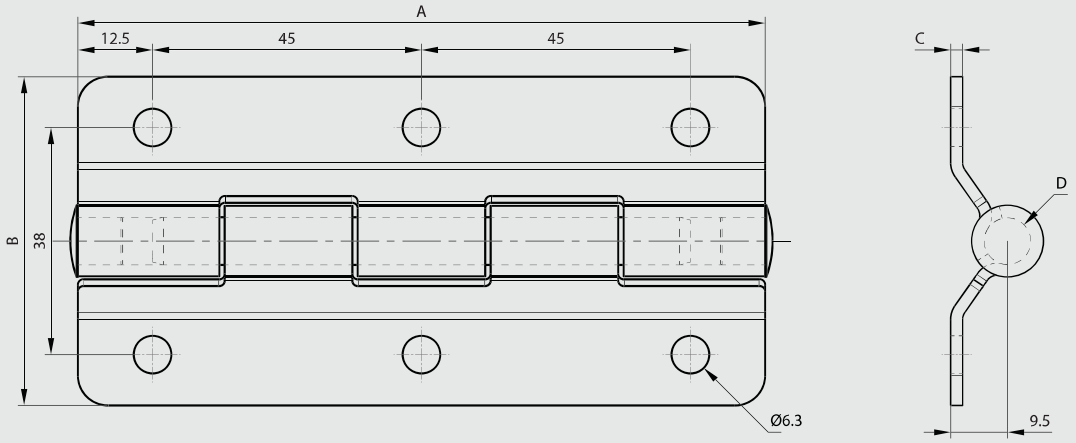

Hinges with or without friction in stainless steel - friction torque 5 N.m

NEW

180° STAINLESS STEEL RoHS

Constant torque. Stable at various temperatures (from -40° to 80°C).
Pin in stainless steel.
Plugs in polyethylene.

	Part number	Material	Finish	A	B	C	D	Torque	Pin material	Note	Weight (g)
NEW	62-1-3720	301 stainless steel	raw	85	55	2	12	5 N.m	stainless steel	with friction	155
	62-1-3713	304 stainless steel	raw	85	55	2	12		304 stainless steel	no torque	161

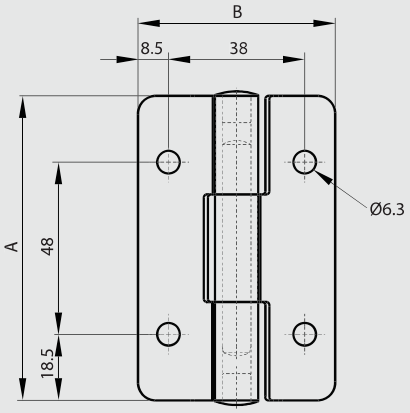

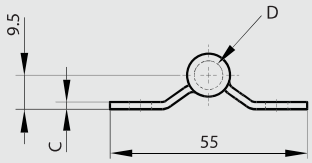

Hinges with or without friction in stainless steel - friction torque 8 N.m

NEW

180° STAINLESS STEEL RoHS

Constant torque. Stable at various temperatures (from -40°C to +80°C).
Pin in stainless steel.
Plugs in polyethylene.

	Part number	Material	Finish	A	B	C	D	Torque	Pin material	Note	Weight (g)
NEW	62-1-3732	301 stainless steel	raw	85	65	3	12	8 N.m	stainless steel	with friction	230
NEW	62-1-3733	304 stainless steel	raw	85	65	3	12		304 stainless steel	no torque	230

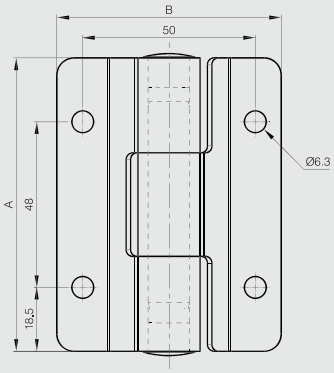

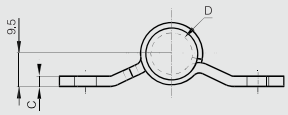

Stainless steel torque hinge 2 N.m

NEW

270° STAINLESS STEEL RoHS

A combination of plastic and metal is used for friction to prevent metallic dust.
For vertical and horizontal applications.
Cycle life: 20,000 cycles.
Operating temperature: -10°C / +40°C
Torque 2 N.m+/-25%
Produced mainly in stainless steel, for a complete description of the materials contact us.

	Part number	Material	Finish	A	B	C	Torque	Weight (g)
NEW	52-7-4136	stainless steel 304	polished	50	50	12	2 N.m	60

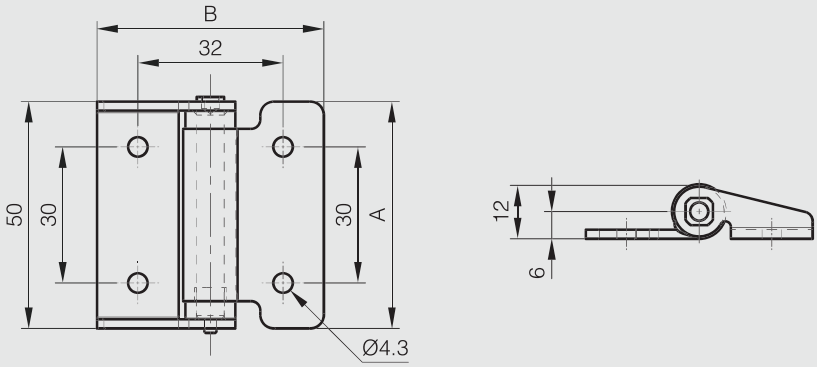

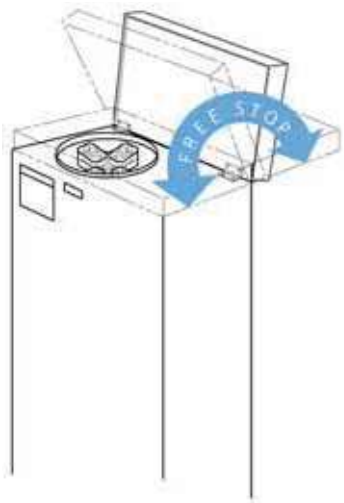

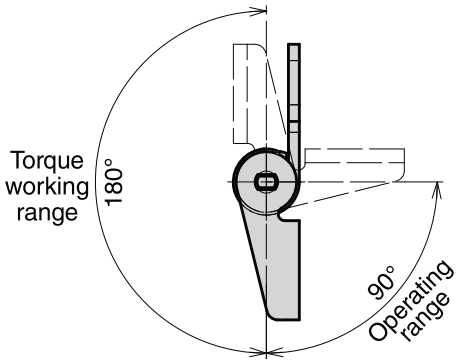

Lift-off torque hinges

NEW

180° STAINLESS STEEL RoHS

For vertical or horizontal applications.
Cycle life: 30,000 cycles.
14-7-3907 and 14-7-3906: torque 0.3 N.m +/- 67%
14-7-3904 and 14-7-3905: torque 1.6 N.m +/- 20%
Produced mainly in stainless steel, for a complete description of the materials contact us.

	Part number	Material	Finish	A	B	C	D	E	F	G	S	Torque	Note	Weight (g)
NEW	14-7-3906	304 stainless steel	polished	50	35	2	10	25	5	30	4.5	0.3 N.m	Type 1	42
NEW	14-7-3907	304 stainless steel	polished	50	35	2	10	25	5	30	4.5	0.3 N.m	Type 2	42
NEW	14-7-3904	304 stainless steel	polished	75	50	2	12	32	6	50	4.5	1.6 N.m	Type 1	96
NEW	14-7-3905	304 stainless steel	polished	75	50	2	12	32	6	50	4.5	1.6 N.m	Type 2	96

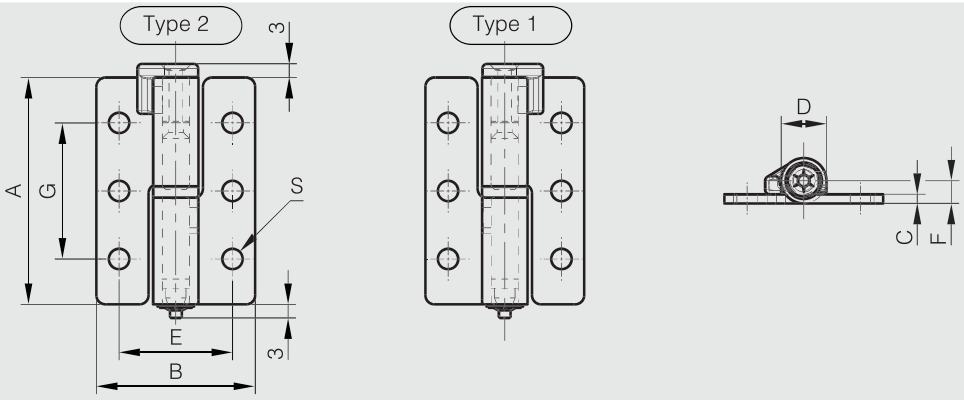

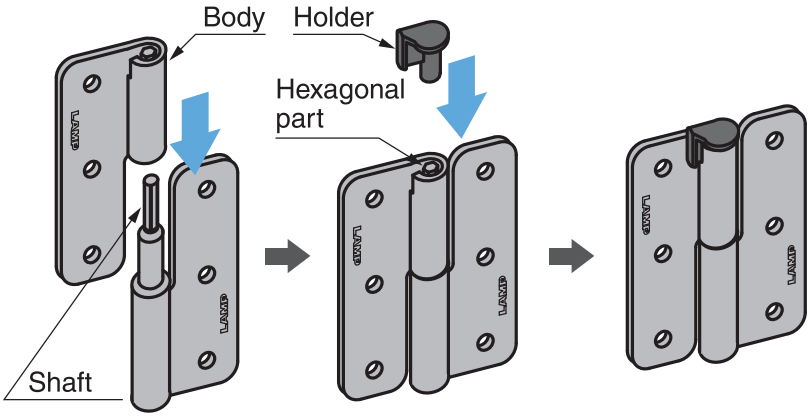

Insert the body into axis, and then insert the holder into the hexagonal part of axis to generate torque.
To detach, use a tool to push the holder out.

One way torque hinge - constant torque 9 N.m / set

- Aluminium torque hinge.
- Friction in one direction only: allows for frictionless handling of the door inthe opposite direction.
- Tested over 30,000 cycles.
- Torque is constant in torque direction.
- Sold in pairs (left / right).
- Ideal to prevent shock to the door and / or safety.
- Torque moment (per set): 9 N.m.
- Initial torque may vary from -20% to +40%.
- Not suited for vibration environment.
- Torque will be affected by temperature.
- Do not lubricate.
- For indoor use only.
- Body in aluminium, shaft in stainless steel, sleeve and cover in polyacetal (POM).

Part number	Material	Finish	A	B	C	D	Torque	Note	Weight (g)
72-7-4250	aluminium	anodised	77.5	60	16	21	9 N.m / set	torque in the clockwise direction sold in pairs	271
72-7-4251	aluminium	anodised	77.5	60	16	21	9 N.m / set	torque in the anti clockwise direction sold in pairs	270

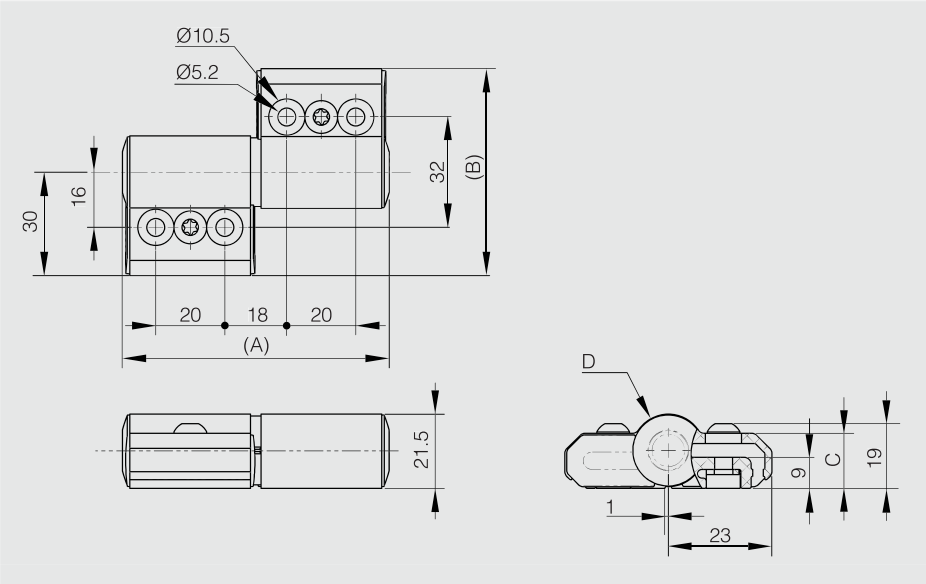

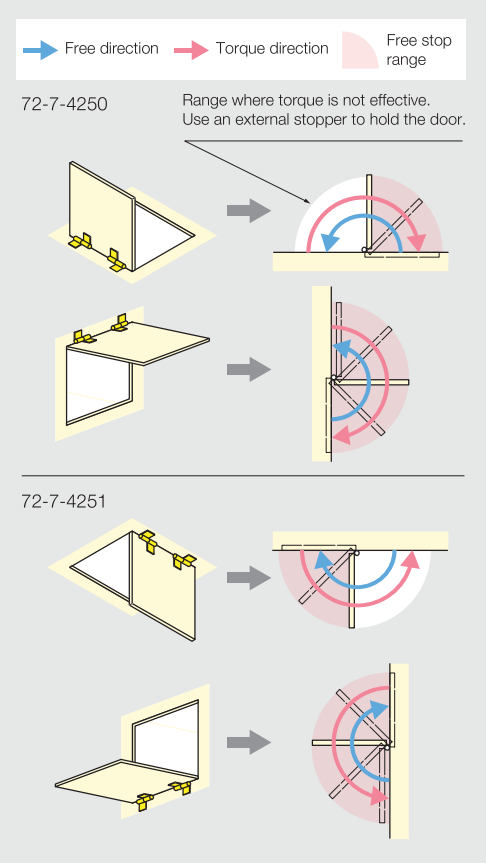

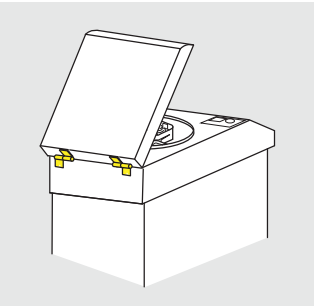

Installation

Dual axis torque hinge - 30 x 60 mm

- Dual axis: free stop at any angle in tilt & swivel.
- Provide torque stability in both directions.
- Torque per piece (tilting): 2.9 N.m.
- Torque per piece (swiveling): 1.4 N.m.
- Suitable for monitor screens.
- Rotation upon axis X can occur from 0 ° to 180 °.
- Rotation upon axis Z can occur up to 360 °.

Produced mainly in stainless steel, for a complete description of the materials contact us.

Part number	Material	Finish	A	B	C	Torque	Weight (g)
70-7-3622	430 stainless steel	polished	30	60	51.5	2.9 N.m (axis X) 1.4 N.m (axis Z)	92

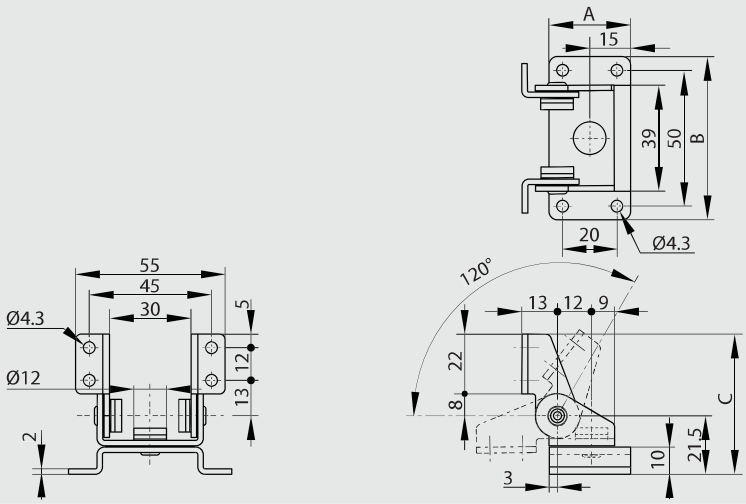

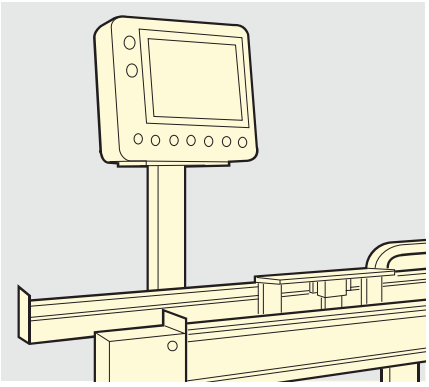

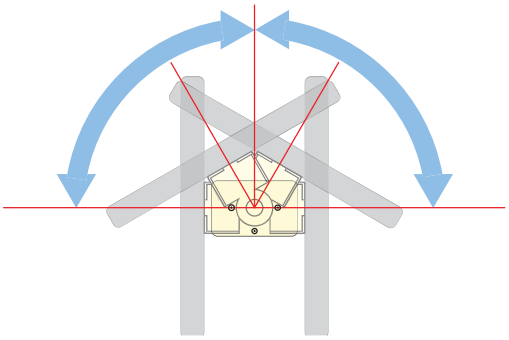

Swivel

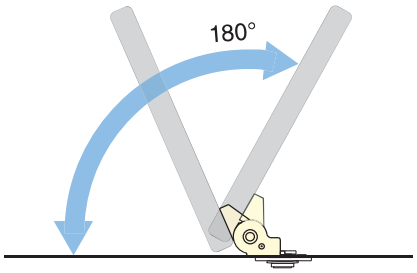

Tilt

Dual axis torque hinge - 50 x 76 mm

- Dual axis: free stop at any angle in tilt & swivel.
- Provide torque stability in both directions.
- Torque per piece (tilting): 7 N.m.
- Torque per piece (swiveling) 3 N.m.
- Suitable for monitor screens.
- Rotation upon axis X is free but can be blocked from 0° to 120° with a dditional pin.
-Rotation upon axis Z is free but can be blocked at 30° or 90° with additional pins (various holes in the fixing plate).
-Electric cables can go through a hole in the middle of the flixing plate.

Produced mainly in stainless steel, for a complete description of the materials contact us.

Part number	Material	Finish	A	B	Torque	Weight (g)
70-7-3621	430 stainless steel	polished	50	76	7 N.m (axis X) 3 N.m (axis Z)	232

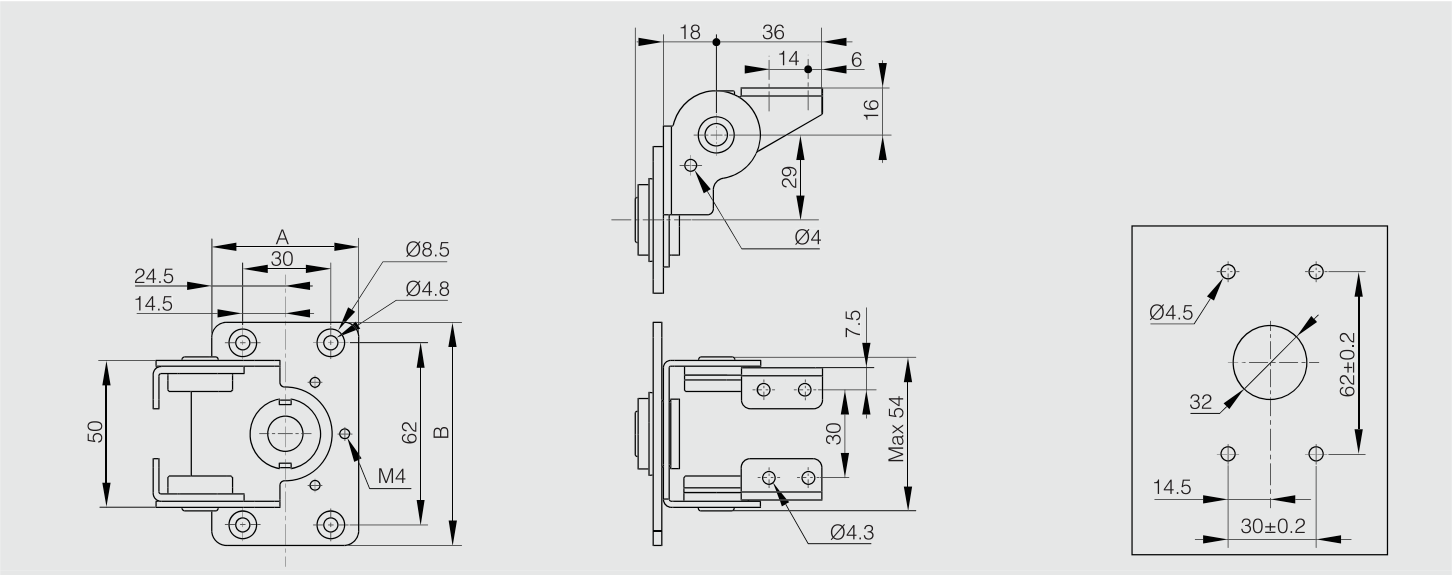

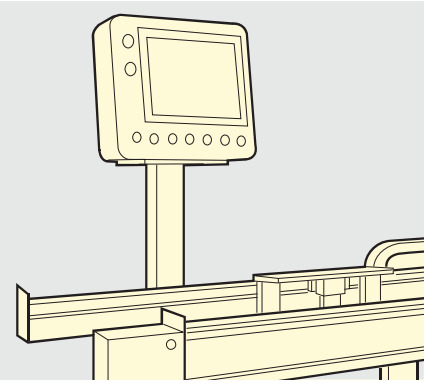

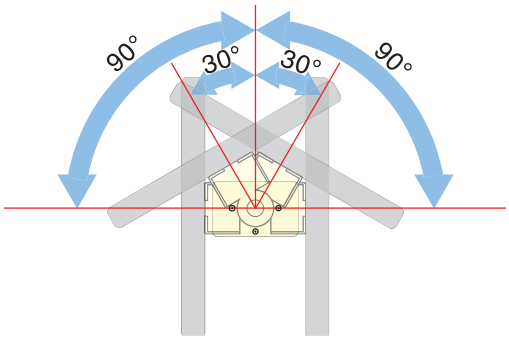

Swivel

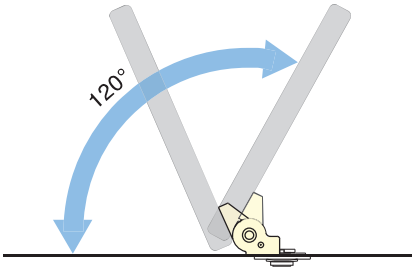

Tilt

Torque hinge A

NEW

180° STAINLESS STEEL RoHS

Provides torque stability in both directions.
For pair using: please use the same torque in both hinges.
When installing, ensure that both hinge axis are aligned.
Cycle life: 20,000 cycles.
Operating temperature: 0°C - 40°C.
For horizontal applications.

	Part number	Material	Finish	A	B	C	Torque	Note	Weight (g)
NEW	15-7-3578	430 stainless steel	polished	66	16.5	2	2.0 N.m	Type 1	30
NEW	15-7-3579	430 stainless steel	polished	66	16.5	2	2.0 N.m	Type 2	30
NEW	15-7-3580	430 stainless steel	polished	66	16.5	2	3.0 N.m	Type 1	30
NEW	15-7-3581	430 stainless steel	polished	66	16.5	2	3.0 N.m	Type 1	30
NEW	15-7-3582	430 stainless steel	polished	80	18.5	2	4.5 N.m	Type 1	65
NEW	15-7-3583	430 stainless steel	polished	80	18.5	2	4.5 N.m	Type 2	65

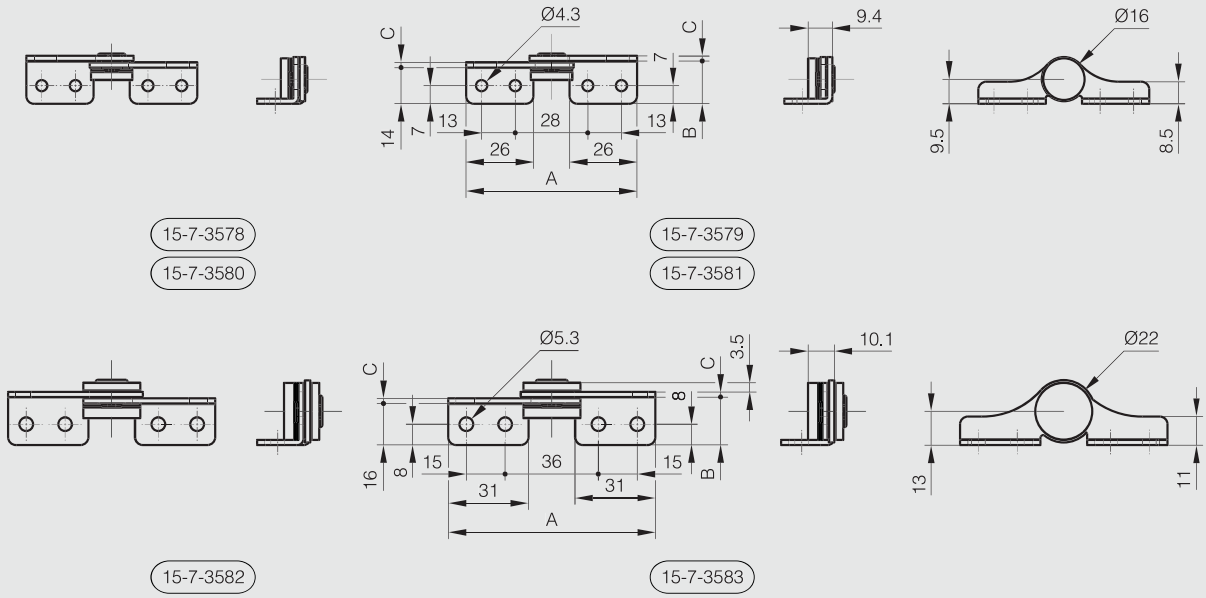

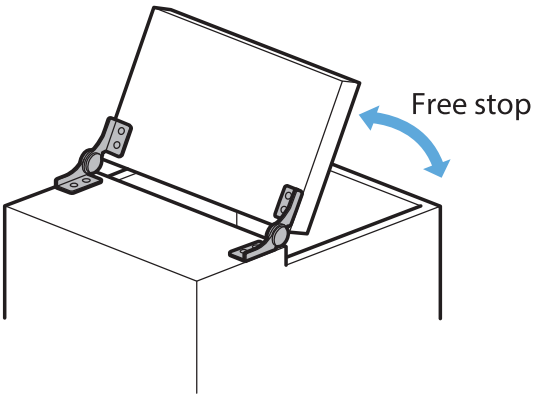

Torque hinge B

NEW

180° STAINLESS STEEL RoHS

Provides torque stability in both directions.
For pair using: Please use the same torque in both hinges.
When installing, ensure that both hinge axis are aligned.
Can not be used around water because not all parts are made of stainless steel.
Cycle life: 20,000 cycles.
Operating temperature: 0°C - 40°C.

	Part number	Material	Finish	A	B	C	Torque	Note	Weight (g)
NEW	15-7-3574	430 stainless steel	polished	43	33	2.5	0.7 N.m	Type 1	31
NEW	15-7-3575	430 stainless steel	polished	43	33	2.5	0.7 N.m	Type 2	31
NEW	15-7-3576	430 stainless steel	polished	43	33	2.5	2.0 N.m	Type 1	32
NEW	15-7-3577	430 stainless steel	polished	43	33	2.5	2.0 N.m	Type 2	32
NEW	15-7-3562	430 stainless steel	polished	43	33	2.5	3.0 N.m	Type 1	32
NEW	15-7-3563	430 stainless steel	polished	43	33	2.5	3.0 N.m	Type 2	32
NEW	15-7-3564	430 stainless steel	polished	48	40	3	4.5 N.m	Type 1	67
NEW	15-7-3565	430 stainless steel	polished	48	40	3	4.5 N.m	Type 2	67

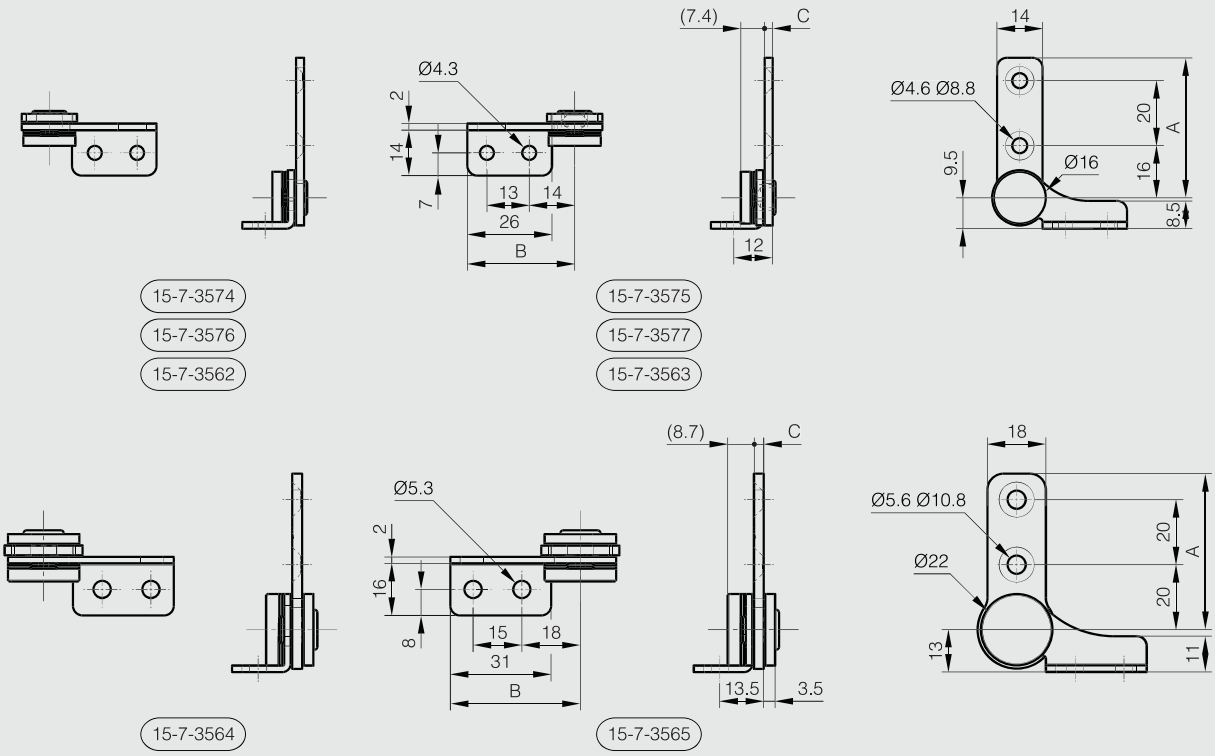

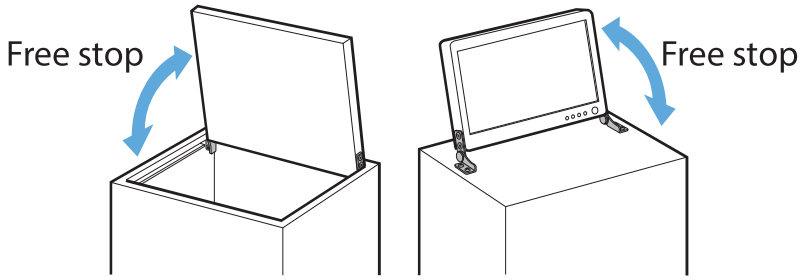

Swivel torque hinge - torque 2 N.m

Rotation angle: 360°.
Friction torque: 2 N.m.
For indoor applications (industrial control panels and monitors).

Part number	Material	Finish	A	B	Torque	Weight (g)
70-7-3636	430 stainless steel	polished	56	56	2 N.m	50

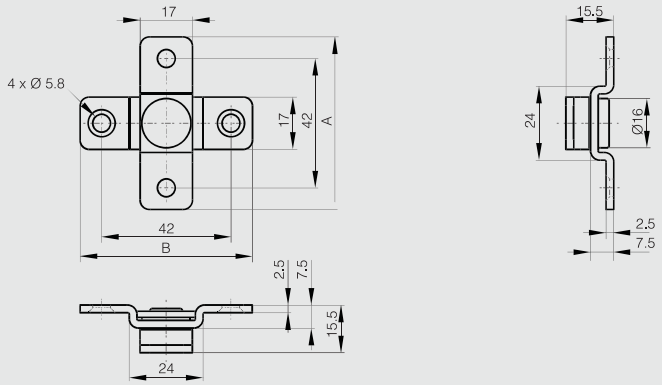

Swivel torque hinge with hole diameter 21.5 mm - 5 N.m

Rotation angle: 360°.
Friction torque: 3 or 5 N.m.
Center hole for easy cable management.
For indoor applications (industrial control panels and monitors).
Produced mainly in stainless steel, for a complete description of the materials contact us.

	Part number	Material	Finish	A	B	Torque	Weight (g)
	70-7-3637	430 stainless steel	polished	60	25	5 N.m	174
NEW	70-7-3661	430 stainless steel	polished	60	25	3 N.m	174

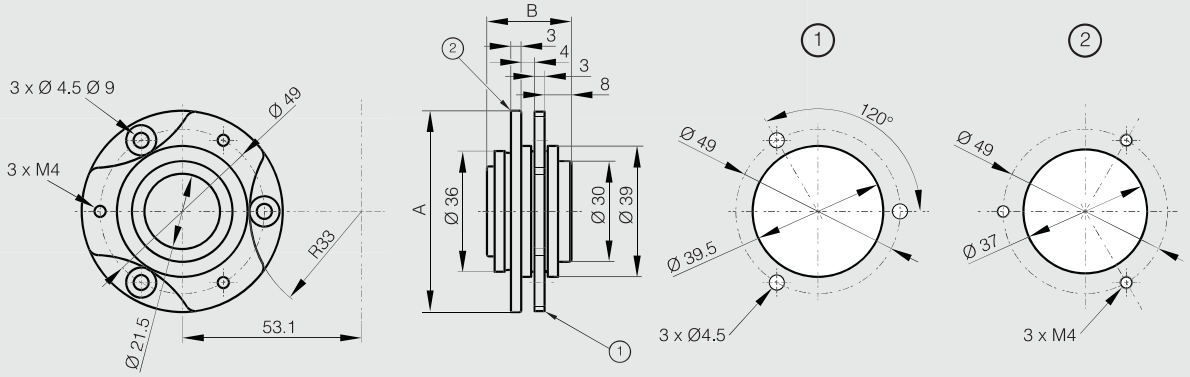

Swivel torque hinge with hole diameter 34 mm - torque 7 N.m

Rotation angle: 360°.
Friction torque: 7 N.m.
Center hole for easy cable management.
For indoor applications (industrial control panels and monitors).
Produced mainly in stainless steel, for a complete description of the materials contact us.

Part number	Material	Finish	A	B	Torque	Weight (g)
70-7-3638	430 stainless steel	polished	87	20.5	7 N.m	282

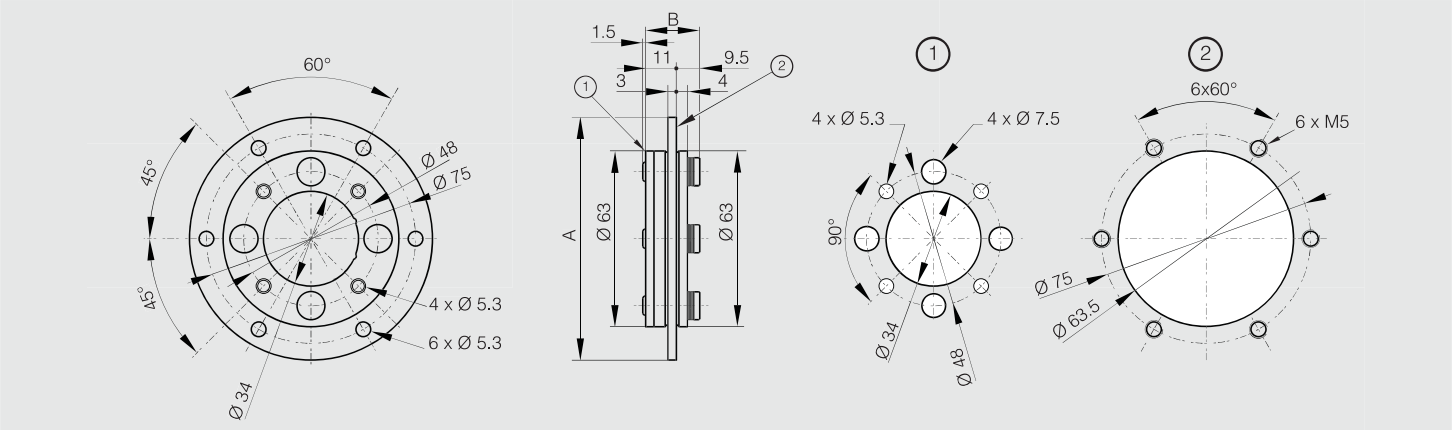

Mini torque hinges - torque 0.25 N.m

Passed 20,000 open/close test.
Pin in 304 stainless steel.

Part number	Material	Finish	A	B	C	D	F	G	S	Torque	Weight (g)
54-7-3547	POM	black	40	28	2.5	2	5	25	3.2	0.25 N.m	5
54-7-3548	POM	white	40	28	2.5	2	5	25	3.2	0.25 N.m	5

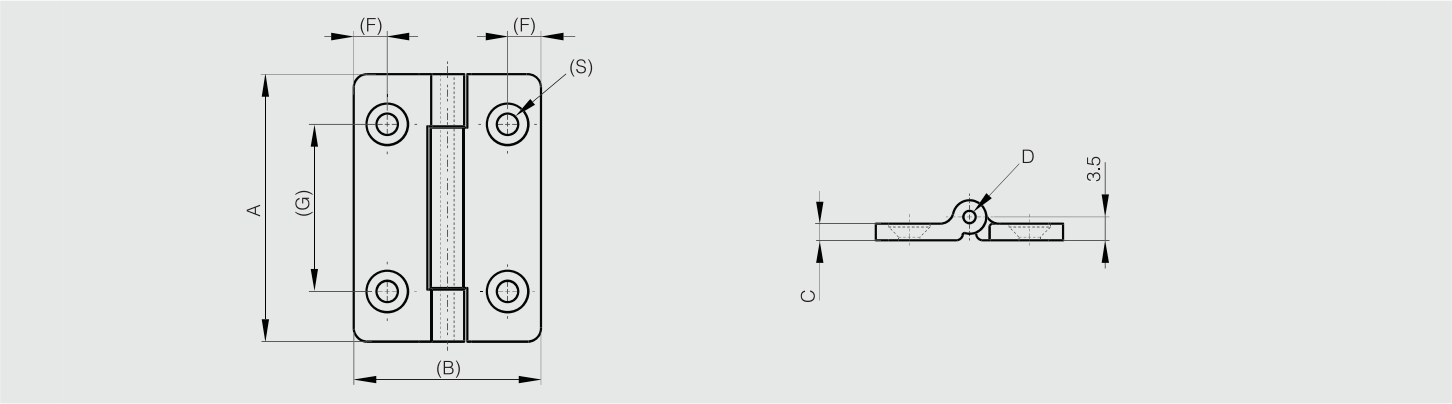

Hi-Klik™ detent hinges - small

270° ALU RoHS

Indented every 30°.
Torque is preset.
3 other versions available: free swinging, with spring or with friction mechanism.

Part number	Material	Finish	A	B	C	D	Torque	Weight (g)
72-1-4235	6060 T5 alu	clear anodised	30	35	3.3	8	0.4 N.m	10
72-1-4236	6060 T5 alu	black anodised	30	35	3.3	8	0.4 N.m	10

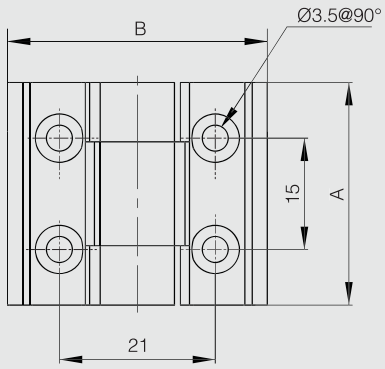

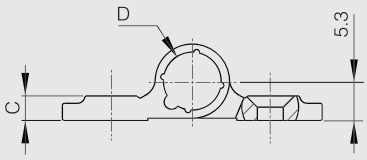

Hi-Klik™ detent hinges - large

270° ALU RoHS

Indented every 30°. 4 torque values.
Torque is preset.
3 other versions available: free swinging, with spring or with friction mechanism.

Part number	Material	Finish	A	B	C	D	Torque	Weight (g)
72-1-4197	6060 T5 alu	black anodised	67	55	4.5	13	1.8 N.m	106
72-1-4198	6060 T5 alu	black anodised	67	55	4.5	13	2.5 N.m	107
72-1-4225	6060 T5 alu	black anodised	67	55	4.5	13	3.2 N.m	107
72-1-4233	6060 T5 alu	black anodised	67	55	4.5	13	5 N.m	107

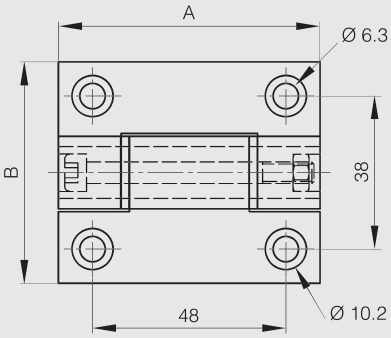

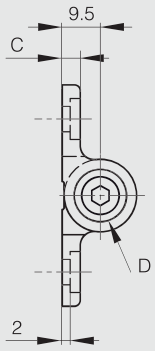

Detent plastic hinges

270° POLYMER RoHS

Holds door leaves in 4 different positions (90° each).
Maximum door weight: 1.2 kg/pair.
303 stainless steel pin.

Part number	Material	Finish	A	B	Torque	Weight (g)
54-7-3509	polyacetal	ivory	50	60	0.49 N.m	32
54-7-3510	polyacetal	black	50	60	0.49 N.m	32

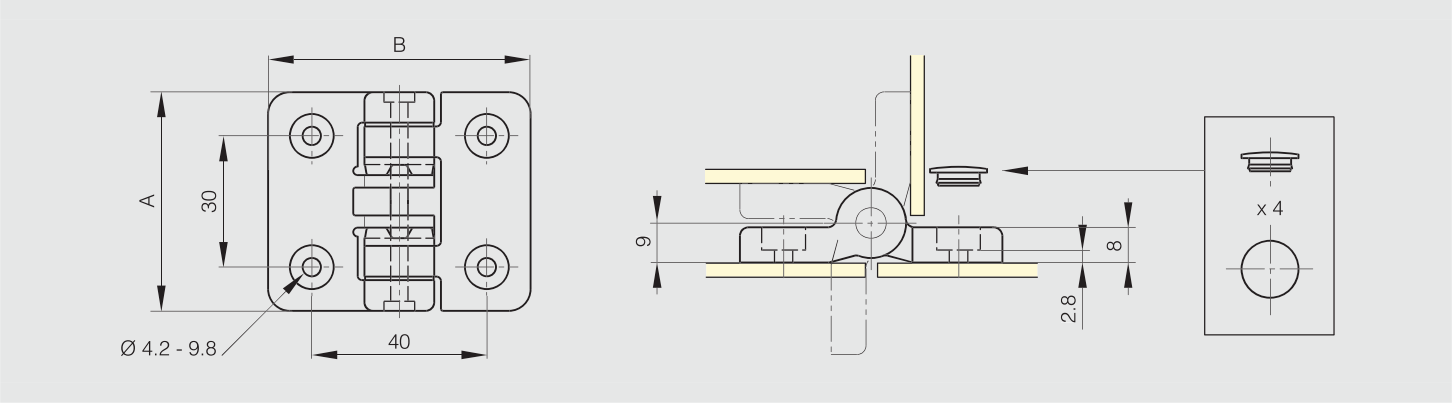

Hinge with stop at 115°

115° STAINLESS STEEL RoHS

Produced mainly in stainless steel, for a complete description of the materials contact us.

Part number	Material	Finish	A	B	C	Weight (g)
52-7-3960	304 stainless steel	polished	40	105	3	122

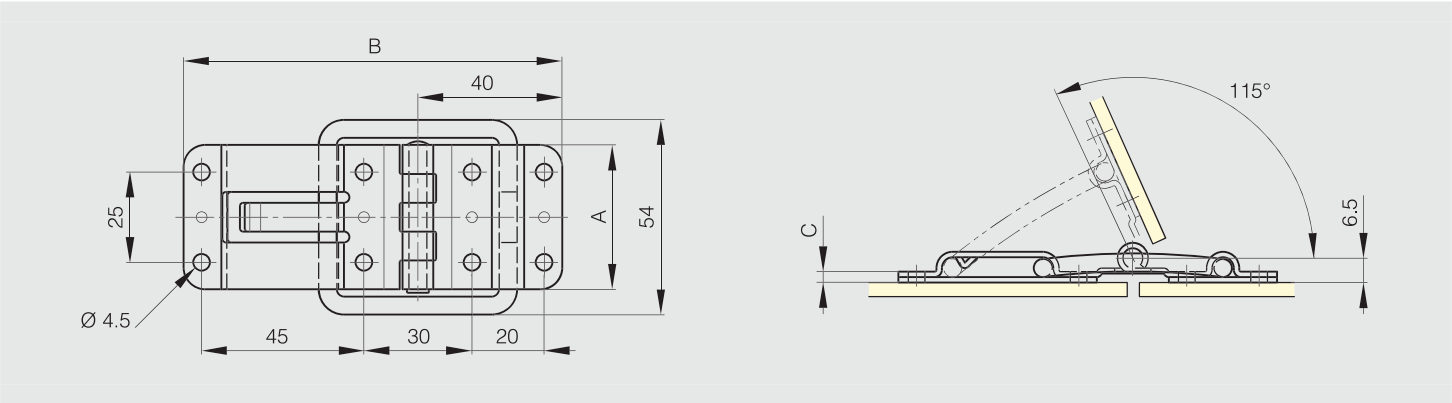

Multi angle locking hinge A with lever

NEW

180° STEEL RoHS

Easily adjusts the flap angle by toggling the lever.
Lock allows the hinge to be held in position from 0° to 180° in 10° increments.
The flap is temporarily unlocked while the lever is pushed.
The flap stays unlocked when the lever is lifted.
Hinge can be used with free axis hinge A (15-7-3568 or 15-7-3569).
Lever, pin, cover: plastic.
Recommended screws: M5.
Unlocking torque: 45 N.m.

	Part number	Material	Finish	A	B	C	Note	Weight (g)
NEW	15-7-3566	steel	nickel plated	94.5	30	4	Type 1	351
NEW	15-7-3567	steel	nickel plated	94.5	30	4	Type 2	351

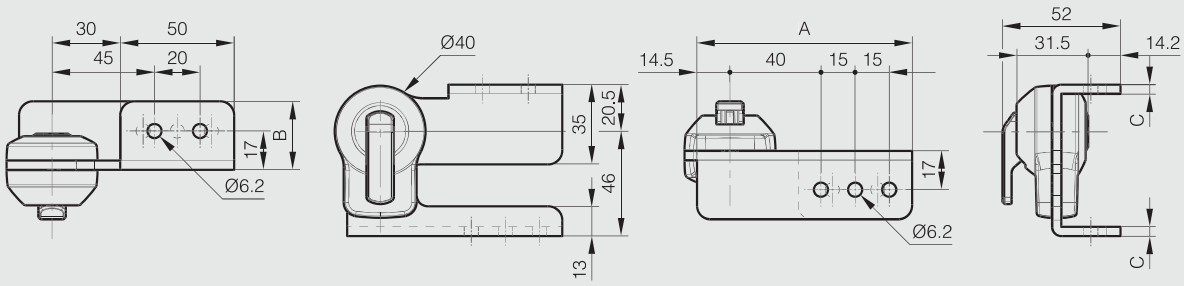

15-7-3566

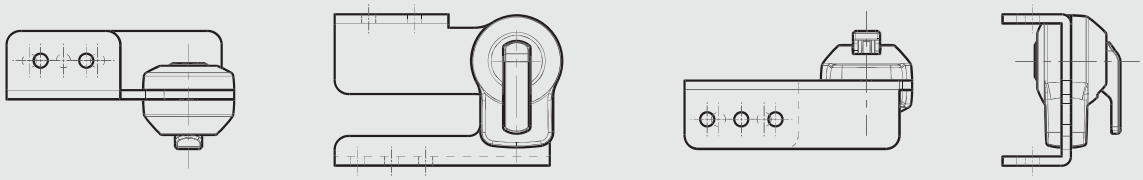

15-7-3567

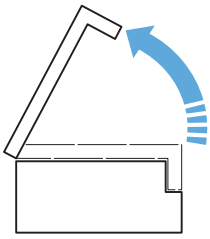

Holds in position
at angles in 10° increments

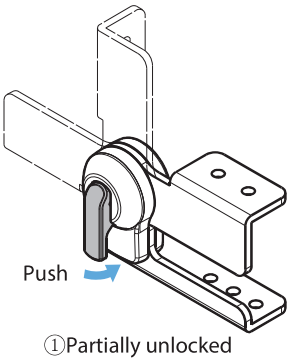

①Partially unlocked

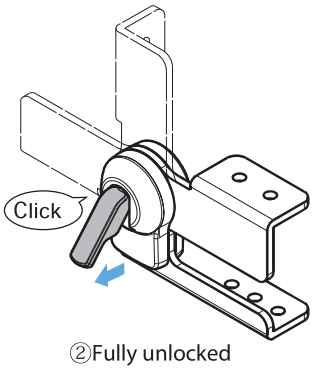

②Fully unlocked

Free axis hinge A

NEW

180° STEEL RoHS

Free axis hinge recommended to be associated with the Multi angle locking hinge with lever A (15-7-3566 or 15-7-3567).

Recommended screws: M5.

	Part number	Material	Finish	A	B	C	Note	Weight (g)
NEW	15-7-3568	steel	nickel plated	94.5	30	4	Type 1	351
NEW	15-7-3569	steel	nickel plated	94.5	30	4	Type 2	351

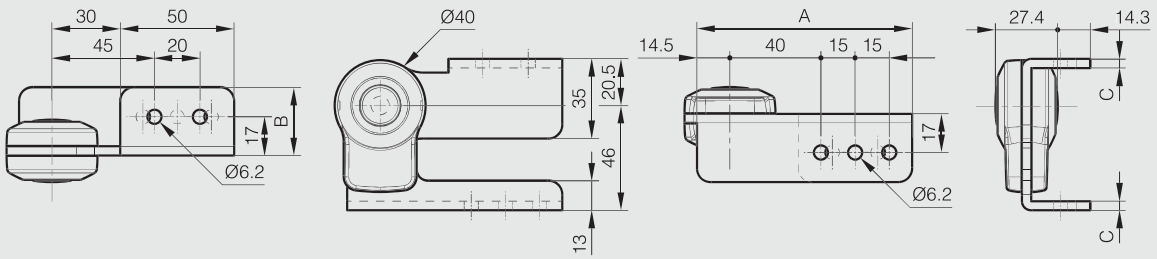

15-7-3568

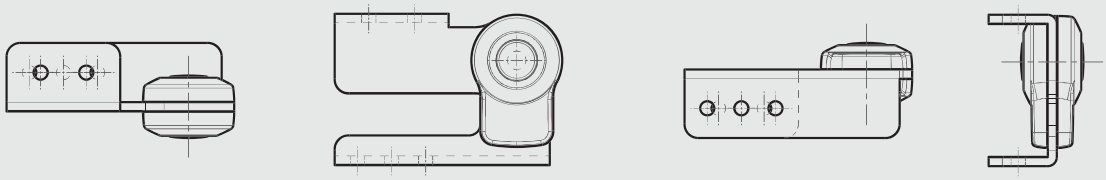

15-7-3569

Multi angle locking hinge B with lever

NEW

180° STEEL RoHS

Easily adjusts the flap angle by toggling the lever.
Lock allows the hinge to be held in position from 0° to 180° in 10° increments.
The flap is temporarily unlocked while the lever is pushed.
The flap stays unlocked when the lever is lifted.
Hinge can be used with free axis hinge B (15-7-3572 or 15-7-3573).
Lever, pin, cover: plastic.
Recommended screws: M5.
Unlocking torque 45 N.m.

	Part number	Material	Finish	A	B	C	Note	Weight (g)
NEW	15-7-3570	steel	nickel plated	94.5	30	4	Type 1	305
NEW	15-7-3571	steel	nickel plated	94.5	30	4	Type 2	305

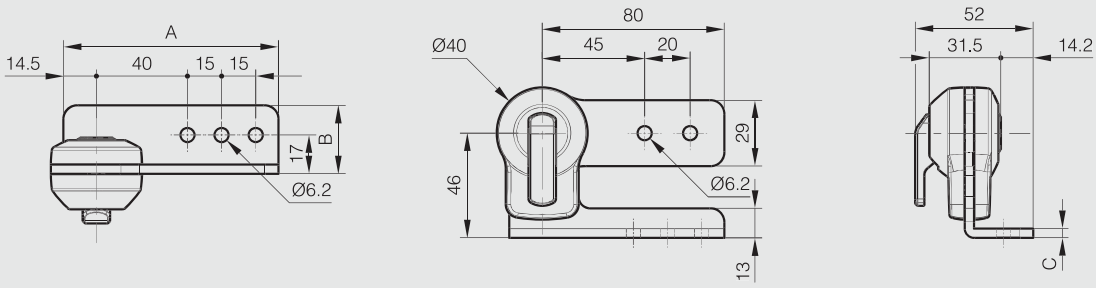

15-7-3570

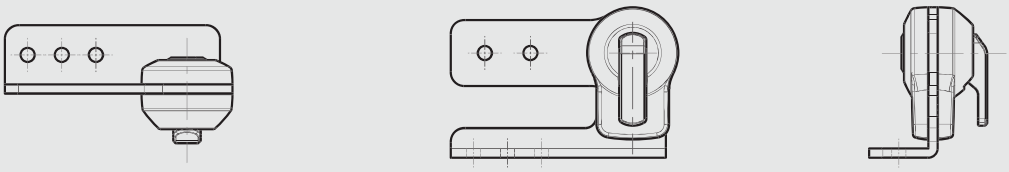

15-7-3571

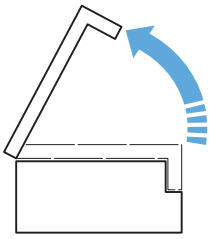

Holds in position
at angles in 10° increments

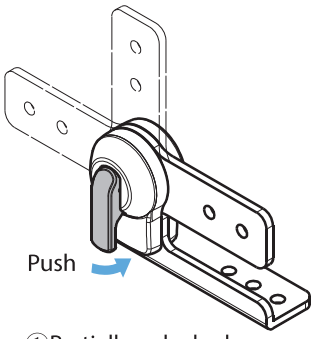

①Partially unlocked

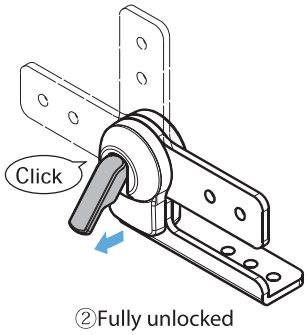

②Fully unlocked

Free axis hinge B

NEW

180° STEEL RoHS

Free axis hinge recommended to be associated with the Multi angle locking hinge with lever B (15-7-3570 or 15-7-3571).

Recommended screws: M5.

	Part number	Material	Finish	A	B	C	Note	Weight (g)
NEW	15-7-3572	steel	nickel	94.5	30	4	Type 1	305
NEW	15-7-3573	steel	nickel plated	94.5	30	4	Type 2	305

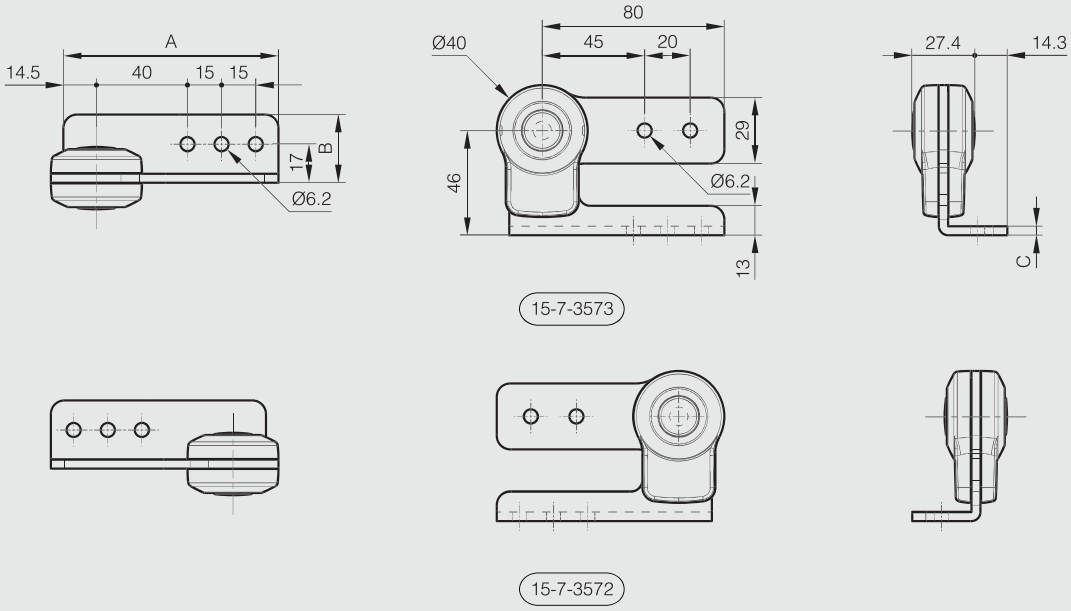

Hinge with stop at 60°

210° STAINLESS STEEL RoHS

Suitable for mounting on glass doors.
For horizontal application.

Part number	Material	Finish	A	B	C	D	Weight (g)
52-1-3840	304 stainless steel	brightened	35	133	2.5	6	140

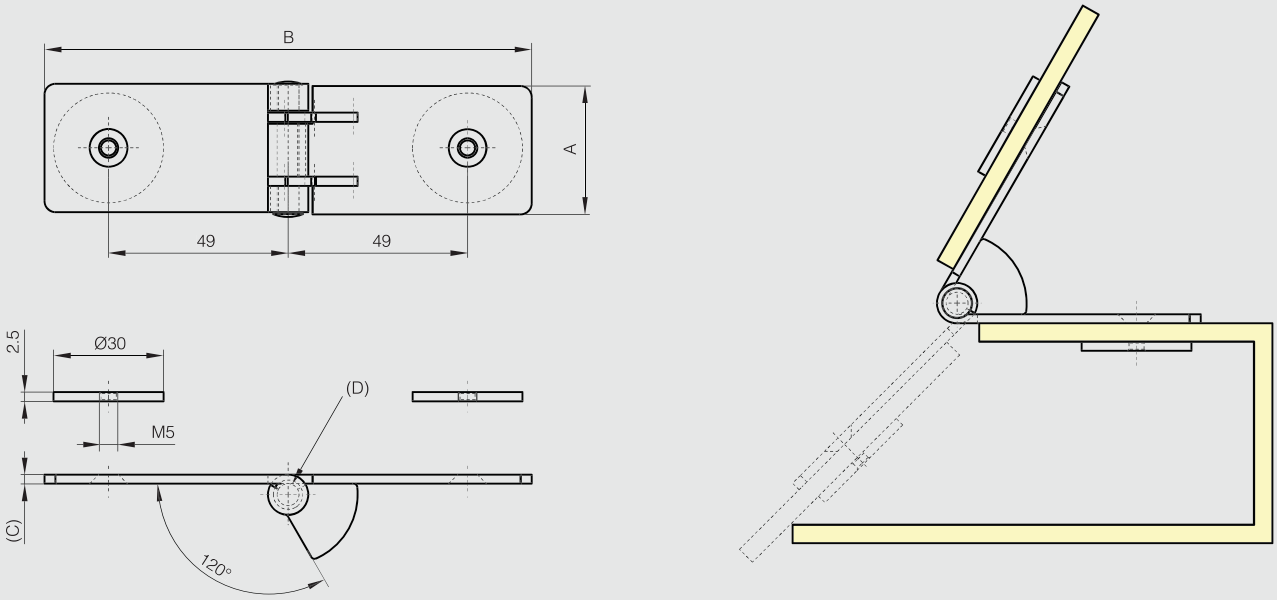

Hinge with integrated stop at 60°

NEW

180° STAINLESS STEEL RoHS

	Part number	Material	Finish	A	B	C	D	E	F	G	S	Weight (g)
NEW	52-1-4135	316 stainless steel	raw	50	50	2.5	6	5.5	34	34	5.5	70

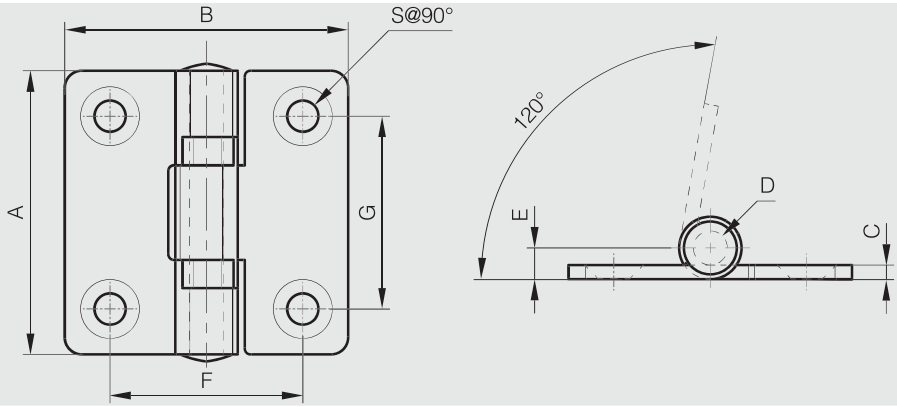

Compression latching hinges

180° POLYMER RoHS

Latching hinge that may be used as hinge or latch according to need.
Allows you to open door as left- or right hinged door, or to remove door completely. Universal left- and right assembly.
Available with a built-in safety catch for safe opening of pressurized doors. In addition to the 3 mm compression that always applies, the latching hinge can easily be adjusted between offset 0 mm, 1.5 mm or 3 mm to put more pressure on the gasket and ensure a tight and sealed door.
Door part mounts on a mounting bracket (included) which stabilize the door in the latching hinge area and provide further adjustability.
The latching hinge can be adjusted 3 mm in all three directions. Insert: recessed hexagon 8 mm, with open and close indication for insert position.

Frame part mounts with screws. Mounting bracket for the door mounts with Ø 4 mm blind rivets.

Note that a normal panel will need four units in order to operate as either left-open, right open, or completely removable.

No problems with thermal break as units are surface-mounted on to door and frame parts, resulting in no parts intruding through the double skinned doors.

Part number	Material	Finish	A	B	C	Note	Weight (g)
54-7-3549	polyamide	black	85	91	30.5	with built-in safety catch	102
54-7-3550	polyamide	black	85	91	30.5	without safety catch	96

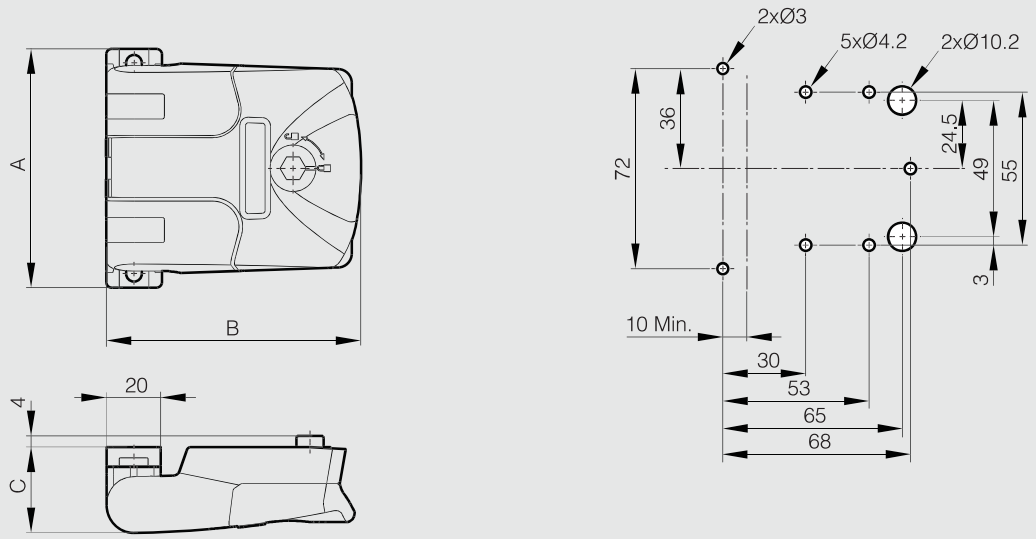

Hinge for insulated door

Hinge designed for use on insulated doors in HVAC units.
With door in open position, the smart quick-release function allows for complete door removal and door attachment, without the need for any tool.

Universal right and left mounting with 180° opening angle. Surface mounted on frame and door with rivets or screws.

Door side in PA6, frame side in black zamak, pin in 303 stainless steel.

Part number	Material	Finish	A	B	C	Weight (g)
54-7-3545	polyamide and zinc die-cast	black	90	74.5	32	140

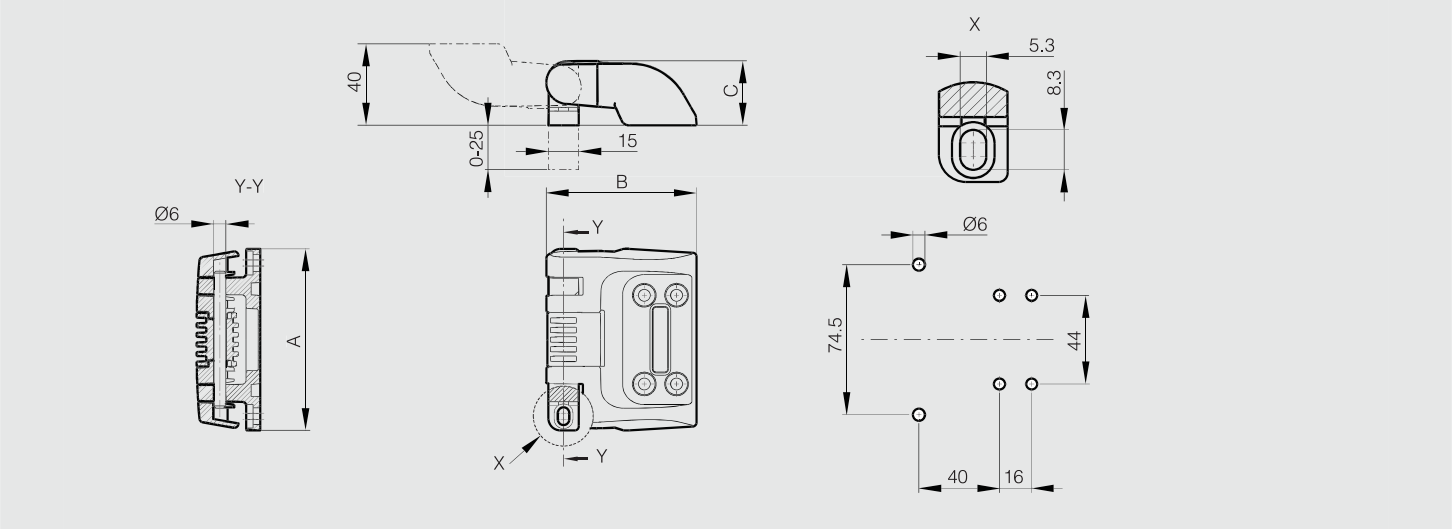

Forged hinges - 3 knuckles

270° STAINLESS STEEL STEEL RoHS

Riveted pin.
Other dimensions or variants are available on request.
Raw steel pin for raw steel hinges. 304 stainless steel pin for 304 stainless steel hinges.

Part number	Material	Finish	A	B	C	D	E	Note	Weight (g)
72-1-3346	steel	raw	32	32	3	4	4	1 MR (railway code)	33
72-1-3348	steel	raw	32	50	3	4	4	3 MR (railway code)	47
72-1-3349	steel	raw	50	50	3	4	4	4 MR (railway code)	75
72-1-3352	steel	raw	50	50	5	6	6	7 MR (railway code)	122
72-1-3351	steel	raw	50	80	3	4	4	6 MR (railway code)	108
72-1-3354	steel	raw	50	80	5	6	6	9 MR (railway code)	182
72-1-3990	304 stainless steel	raw	50	50	3	4	4	4 MR (railway code)	72
72-1-4186	304 stainless steel	raw	50	80	3	4	4	6 MR (railway code)	113
72-1-4187	304 stainless steel	raw	50	80	5	6	6	9 MR (railway code)	182

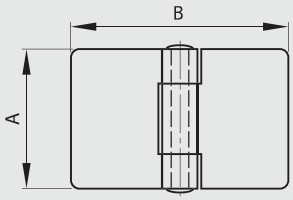

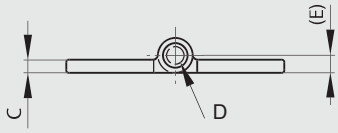

Forged hinges with reversed leaves - 3 knuckles

270° STAINLESS STEEL STEEL RoHS

Riveted pin.
Other dimensions or variants are available on request.
Raw steel pin for raw steel hinges. 304 stainless steel pin for 304 stainless steel hinges.

Part number	Material	Finish	A	B	C	D	E	Note	Weight (g)
72-1-3380	steel	raw	32	50	3	4	4	17 MR (railway code)	33
72-1-3381	steel	raw	50	50	3	4	4	20 MR (railway code)	71
72-1-3384	steel	raw	50	50	5	6	6	23 MR (railway code)	122
72-1-3383	steel	raw	50	80	3	4	4	22 MR (railway code)	104
72-1-3386	steel	raw	50	80	5	6	6	25 MR (railway code)	182
72-1-3992	304 stainless steel	raw	50	50	3	4	4	20 MR (railway code)	71
72-1-3993	304 stainless steel	raw	50	80	3	4	4	22 MR (railway code)	112

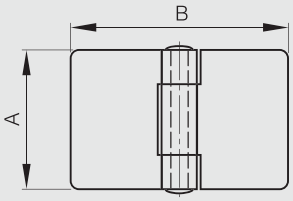

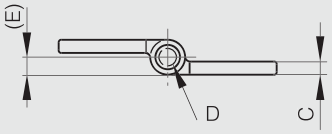

Forged hinges - 5 knuckles

NEW

270° STAINLESS STEEL STEEL RoHS

Riveted pin (except part number: 72-1-4288 with removable pin).
Other dimensions or variants are available on request.
Raw steel pin for raw steel hinges. 304 stainless steel pin for 304 stainless steel hinges.

	Part number	Material	Finish	A	B	C	D	E	Note	Weight (g)
	72-1-4289	steel	raw	60	60	6	6	6		283
	72-1-3410	steel	raw	80	80	5	6	6	1 FR (railway code)	288
	72-1-3414	steel	raw	80	80	8	10	10	14 FR (railway code)	485
	72-1-3412	steel	raw	80	130	5	6	6	3 FR (railway code)	444
	72-1-3416	steel	raw	80	130	8	10	10	16 FR (railway code)	761
	72-1-3413	steel	raw	125	80	5	6	6	11 FR (railway code)	444
	72-1-3417	steel	raw	125	130	8	10	10	24 FR (railway code)	1240
NEW	72-1-3420	steel	raw	160	130	8	10	10	34 FR (railway code)	1480
	72-1-4290	304 stainless steel	raw	60	60	6	6	6		283
	72-1-3991	304 stainless steel	raw	80	80	5	6	6	1 FR (railway code)	298
	72-1-4279	304 stainless steel	raw	80	130	5	6	6	3 FR (railway code)	446
	72-1-4288	304 stainless steel	raw	80	130	5	6	6	Removable pin	457

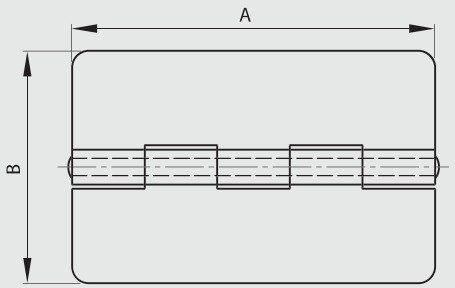

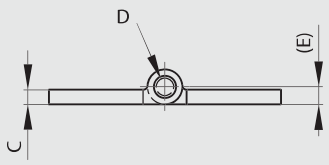

Forged lift-off hinges

With raw brass washer.

Part number	Material	Finish	A	B	C	D	E	F	G	S	Note	Weight (g)
14-1-3328	steel	raw	48	40	3	4	4	32	8	4	type 1	52
14-1-3329	steel	raw	48	40	3	4	4	32	8	4	type 2	52
14-1-3330	steel	raw	60	50	3.5	5	5	40	10	5.5	type 1	97
14-1-3331	steel	raw	60	50	3.5	5	5	40	10	5.5	type 2	95
14-1-3332	steel	raw	72	60	4	6	6	48	12	6.5	type 1	156
14-1-3333	steel	raw	72	60	4	6	6	48	12	6.5	type 2	156
14-1-3334	steel	raw	84	70	4.5	7	7	56	14	7.5	type 1	245
14-1-3335	steel	raw	84	70	4.5	7	7	56	14	7.5	type 2	245
14-1-3336	steel	raw	96	80	5	8	8	66	16	8.5	type 1	360
14-1-3337	steel	raw	96	80	5	8	8	66	16	8.5	type 2	360

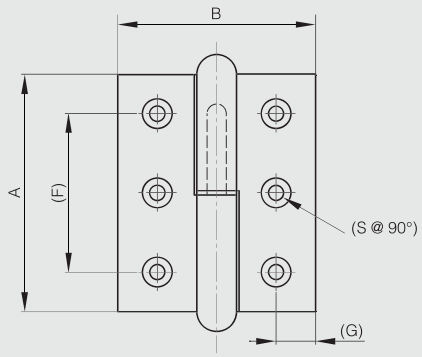

14-1-3328 & 14-1-3330
14-1-3332 & 14-1-3334 & 14-1-3336

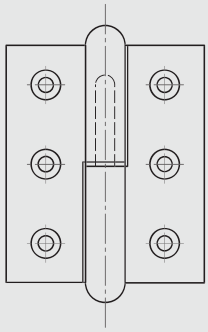

14-1-3329 & 14-1-3331
14-1-3333 & 14-1-3335 & 14-1-3337

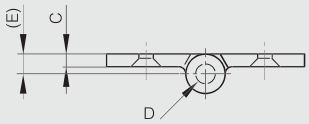

Modulo range: composed of parts to be assembled by customer (or on request)

Pin is made of either an expanded pin (BG) or a headed pin (BT) with a plug (VA).

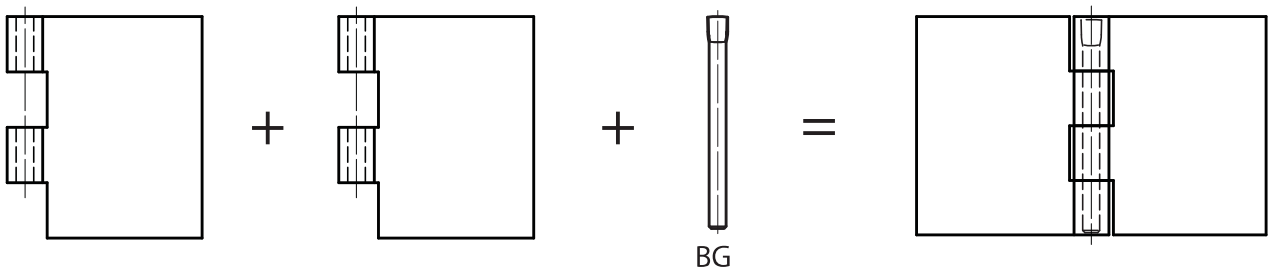

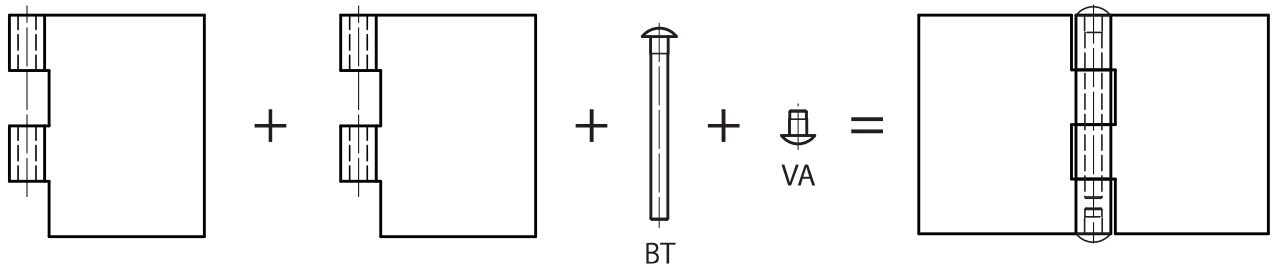

BG: Expanded pin
BT: Headed pin
VA: Plug

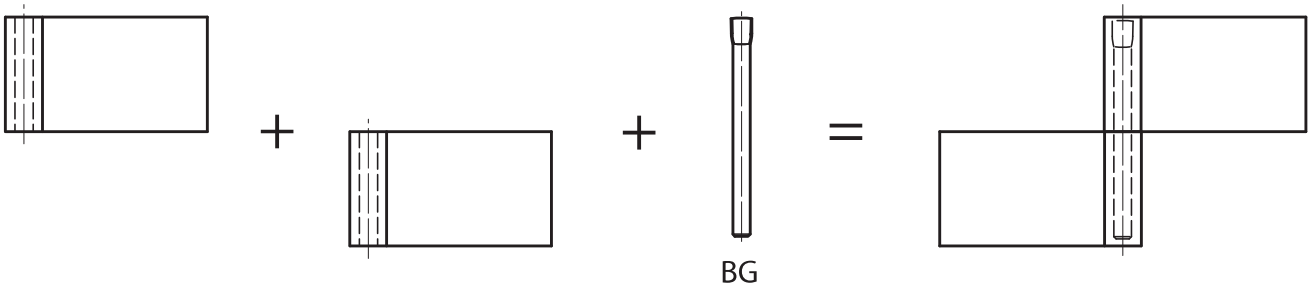

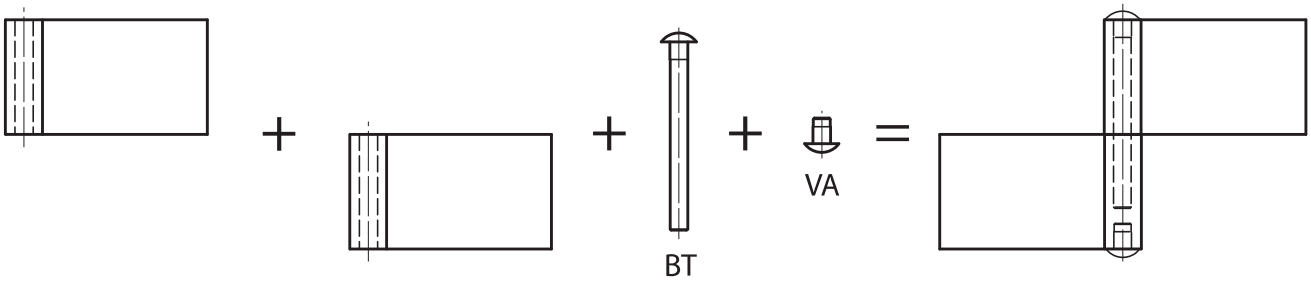

Parts can be delivered assembled, on request (**part number 91-1-0001**).

NOTE:
- Only leaves with the same thickness can be fitted together.
- The expanded pin (BG) can be assembled or disassembled with a hammer.
- The headed pin BT and the plug VA are fitted together with a hammer and make the pin non removable.

Modifications:
This range of hinges has been designed to make modifications easier (cranking, drilling…) for our customers.
However any in-house modification is possible with a MOQ of 250 units for stainless steel material and 500 units for steel material.
Please ask for more information.

Half leaves for Modulo hinges - thickness 3 mm

Leaves can be combined together and with either:
- a 6 mm diameter expanded pin (BG) (part numbers 27-1-3820, 27-1-3823),
- a 6 mm pin in POM (part number 27-1-3938),
- a 6 mm diameter headed pin (BT) (part numbers 27-1-3826, 27-1-3829),
with a plug (part numbers 27-1-3832, 27-1-3835).

Part number	Material	Finish	A	B	C	D	Weight (g)
50-1-3991	steel	raw	80	30	3	6	74
50-1-3992	steel	raw	80	40	3	6	93
50-1-3993	steel	raw	80	50	3	6	111
50-1-3994	steel	raw	80	60	3	6	130
50-1-3995	steel	raw	80	80	3	6	168
52-1-3771	304 stainless steel	deburred	80	30	3	6	74
52-1-3772	304 stainless steel	deburred	80	40	3	6	93
52-1-3773	304 stainless steel	deburred	80	50	3	6	111
52-1-3774	304 stainless steel	deburred	80	60	3	6	130
52-1-3775	304 stainless steel	deburred	80	80	3	6	168

Half leaves for Modulo hinges - thickness 4 mm

Leaves can be combined together and with either:
- a 8 mm diameter expanded pin (BG) (part numbers 27-1-3821, 27-1-3824),
- a 8 mm diameter headed pin (BT) (part numbers 27-1-3827, 27-1-3830),
with a plug (part numbers 27-1-3833, 27-1-3836).

Part number	Material	Finish	A	B	C	D	Weight (g)
50-1-3996	steel	raw	100	30	4	8	131
50-1-3997	steel	raw	100	40	4	8	163
50-1-3998	steel	raw	100	50	4	8	194
50-1-3999	steel	raw	100	60	4	8	225
50-1-4000	steel	raw	100	80	4	8	288
52-1-3776	304 stainless steel	deburred	100	30	4	8	131
52-1-3777	304 stainless steel	deburred	100	40	4	8	163
52-1-3778	304 stainless steel	deburred	100	50	4	8	194
52-1-3779	304 stainless steel	deburred	100	60	4	8	225
52-1-3780	304 stainless steel	deburred	100	80	4	8	288

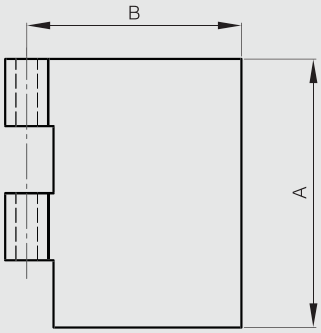

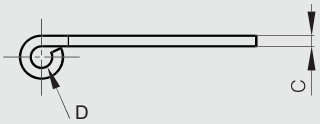

Half leaves for Modulo hinges - thickness 5 mm

Leaves can be combined together and with either:
- a 10 mm diameter expanded pin (BG) (part numbers 27-1-3822, 27-1-3825),
- a 10 mm diameter headed pin (BT) (part numbers 27-1-3828, 27-1-3831),
with a plug (part numbers 27-1-3834, 27-1-3837).

Part number	Material	Finish	A	B	C	D	Weight (g)
50-1-4001	steel	raw	120	30	5	10	211
50-1-4002	steel	raw	120	40	5	10	258
50-1-4003	steel	raw	120	50	5	10	305
50-1-4004	steel	raw	120	60	5	10	352
50-1-4005	steel	raw	120	80	5	10	447
52-1-3781	304 stainless steel	deburred	120	30	5	10	211
52-1-3782	304 stainless steel	deburred	120	40	5	10	258
52-1-3783	304 stainless steel	deburred	120	50	5	10	305
52-1-3784	304 stainless steel	deburred	120	60	5	10	352
52-1-3785	304 stainless steel	deburred	120	80	5	10	447

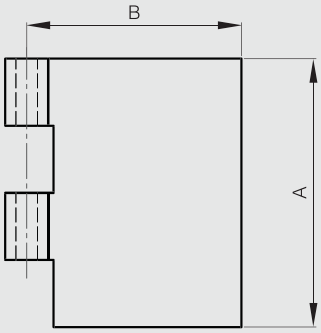

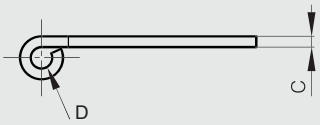

Half leaves for Modulo pin hinges - thickness 3 mm

Leaves can be combined together and with either:
- a 6 mm diameter expanded pin (BG) (part numbers 27-1-3820, 27-1-3823),
- a 6 mm pin in POM (part number 27-1-3938),
- a 6 mm diameter headed pin (BT) (part numbers 27-1-3826, 27-1-3829),
with a plug (part numbers 27-1-3832, 27-1-3835).

Part number	Material	Finish	A	B	C	D	Weight (g)
12-1-3941	steel	raw	40	20	3	6	25
12-1-3866	steel	raw	40	30	3	6	37
12-1-3867	steel	raw	40	50	3	6	56
12-1-3868	steel	raw	40	80	3	6	84
12-1-3943	steel	raw	40	120	3	6	126
12-1-3942	304 stainless steel	deburred	40	20	3	6	25
12-1-3869	304 stainless steel	deburred	40	30	3	6	37
12-1-3870	304 stainless steel	deburred	40	50	3	6	56
12-1-3871	304 stainless steel	deburred	40	80	3	6	84
12-1-3944	304 stainless steel	deburred	40	120	3	6	126

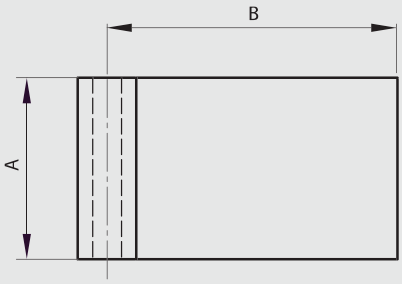

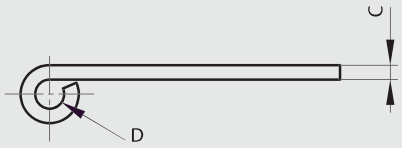

Half leaves for Modulo pin hinges - thickness 4 mm

Leaves can be combined together and with either:
- a 8 mm diameter expanded pin (BG) (part numbers 27-1-3821, 27-1-3824),
- a 8 mm diameter headed pin (BT) (part numbers 27-1-3827, 27-1-3830),
with a plug (part numbers 27-1-3833, 27-1-3836).

Part number	Material	Finish	A	B	C	D	Weight (g)
12-1-3872	steel	raw	50	30	4	8	66
12-1-3873	steel	raw	50	50	4	8	97
12-1-3874	steel	raw	50	80	4	8	144
12-1-3875	304 stainless steel	deburred	50	30	4	8	66
12-1-3876	304 stainless steel	deburred	50	50	4	8	97
12-1-3877	304 stainless steel	deburred	50	80	4	8	144

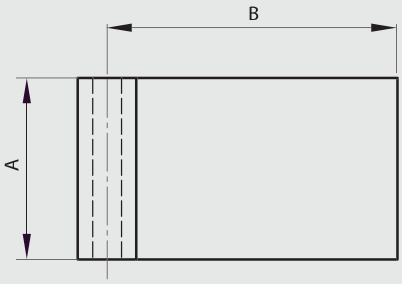

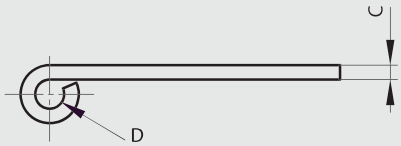

Half leaves for Modulo pin hinges - thickness 5 mm

Leaves can be combined together and with either:
- a 10 mm diameter expanded pin (BG) (part numbers 27-1-3822, 27-1-3825),
- a 10 mm diameter headed pin (BT) (part numbers 27-1-3828, 27-1-3831),
with a plug (part numbers 27-1-3834, 27-1-3837).

Part number	Material	Finish	A	B	C	D	Weight (g)
12-1-3878	steel	raw	60	40	5	10	129
12-1-3879	steel	raw	60	60	5	10	176
12-1-3880	steel	raw	60	80	5	10	224
12-1-3881	304 stainless steel	deburred	60	40	5	10	129
12-1-3882	304 stainless steel	deburred	60	60	5	10	176
12-1-3883	304 stainless steel	deburred	60	80	5	10	224

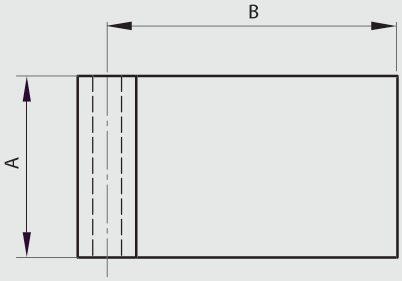

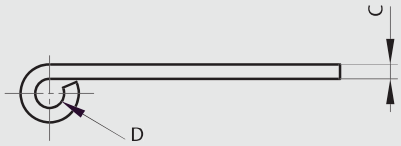

Pin in POM for Modulo system

POLYMER RoHS

This pin can be combined with Modulo hinges for thickness 3 mm only.
It enables you to make a hinge pin.
Pin can be easily removed without tool.

Part number	Material	Finish	D	L	Weight (g)
27-1-3938	POM	white	6	80	2

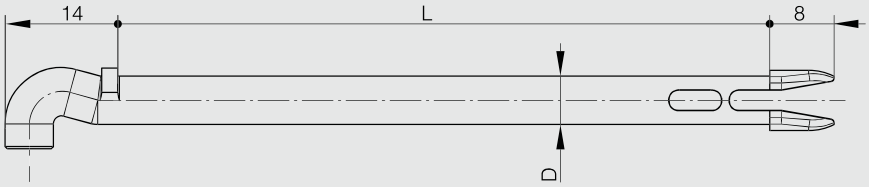

Expanded pin BG for Modulo system

STAINLESS STEEL STEEL RoHS

This pin alone enables you to make a hinge pin for Modulo hinges.

Part number	Material	Finish	D	L	Weight (g)
27-1-3820	steel	zinc plated	6	80	18
27-1-3821	steel	zinc plated	8	100	39
27-1-3822	steel	zinc plated	10	120	74
27-1-3823	304 stainless steel	raw	6	80	18
27-1-3824	304 stainless steel	raw	8	100	39
27-1-3825	304 stainless steel	raw	10	120	74

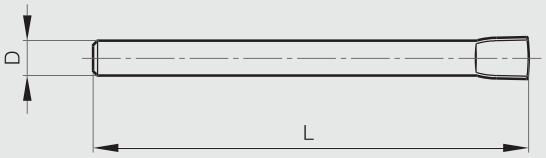

BG Broche Gonflée
Expanded pin
Gestauchter Stift

Headed pin BT for Modulo system

This pin combined with a plug (VA) enables you to make a hinge pin for Modulo hinges.

STAINLESS STEEL STEEL RoHS

Part number	Material	Finish	D	E	L	Weight (g)
27-1-3826	steel	zinc plated	6	3	66	16
27-1-3827	steel	zinc plated	8	4	86	36
27-1-3828	steel	zinc plated	10	5	106	68
27-1-3829	304 stainless steel	raw	6	3	66	16
27-1-3830	304 stainless steel	raw	8	4	86	36
27-1-3831	304 stainless steel	raw	10	5	106	68

Plug (VA) for Modulo system

This plug combined with a headed pin (BT) enables you to make a hinge pin for Modulo hinges.

STAINLESS STEEL STEEL RoHS

Part number	Material	Finish	D	F	L	Weight (g)
27-1-3832	steel	zinc plated	6	12	12	3
27-1-3833	steel	zinc plated	8	16	12	6
27-1-3834	steel	zinc plated	10	20	12	11
27-1-3835	304 stainless steel	raw	6	12	12	3
27-1-3836	304 stainless steel	raw	8	16	12	6
27-1-3837	304 stainless steel	raw	10	20	12	11

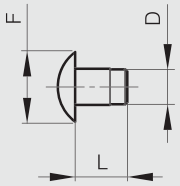

VA VAse Plug Stopfen

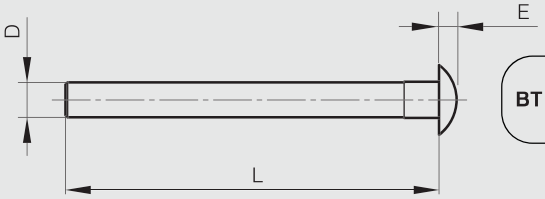

BT Broche à Tête Headed pin Stift mit Kopf

Heavy duty hinge 115 x 70 mm - 5 knuckles

304 stainless steel riveted pin.

	Part number	Material	Finish	A	B	C	D	Weight (g)
NEW	52-1-4141	304 stainless steel	brightened	115	70	4	10	420

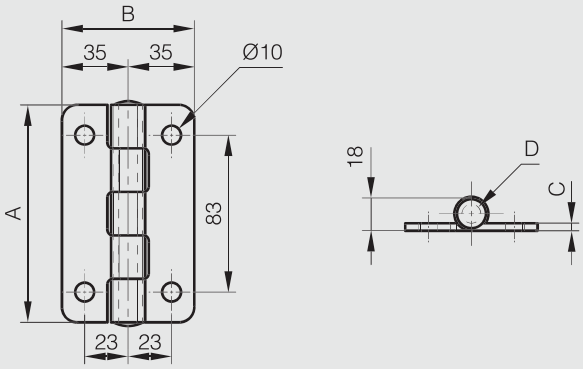

Heavy duty hinge 115 x 125 mm - 5 knuckles

304 stainless steel riveted pin.

	Part number	Material	Finish	A	B	C	D	Weight (g)
NEW	52-1-4139	304 stainless steel	brightened	115	125	4	10	570

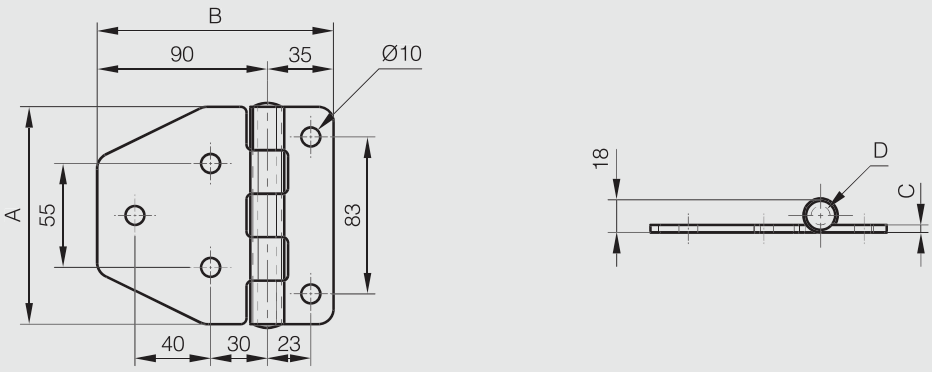

Heavy duty hinge 115 x 155 mm - 5 knuckles

304 stainless steel riveted pin.

	Part number	Material	Finish	A	B	C	D	Weight (g)
NEW	52-1-4140	304 stainless steel	brightened	115	155	4	10	650

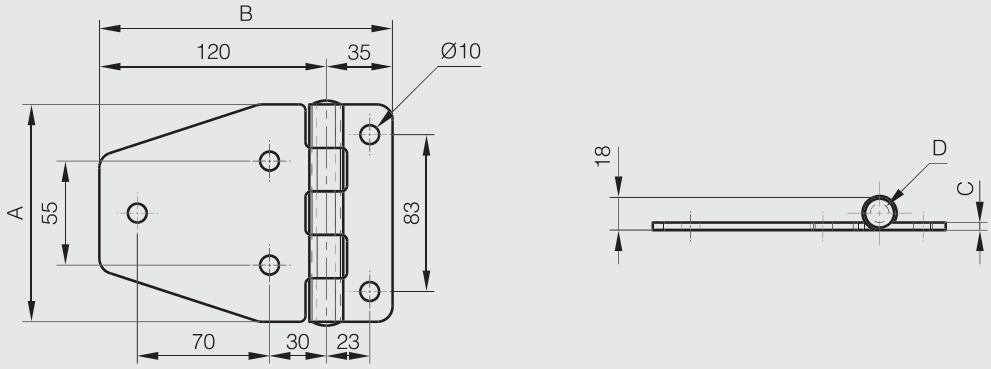

Heavy duty hinge 115 x 125 mm - 3 knuckles

304 stainless steel riveted pin.

	Part number	Material	Finish	A	B	C	D	E	Weight (g)
NEW	52-1-4142	304 stainless steel	brightened	115	125	4	10	65	470

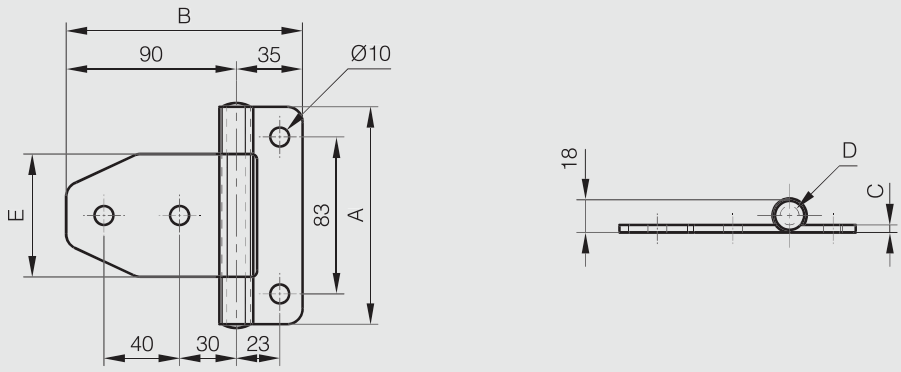

Heavy duty hinge 115 x 155 mm - 3 knuckles

304 stainless steel riveted pin.

	Part number	Material	Finish	A	B	C	D	E	Weight (g)
NEW	52-1-4143	304 stainless steel	brightened	115	155	4	10	65	530

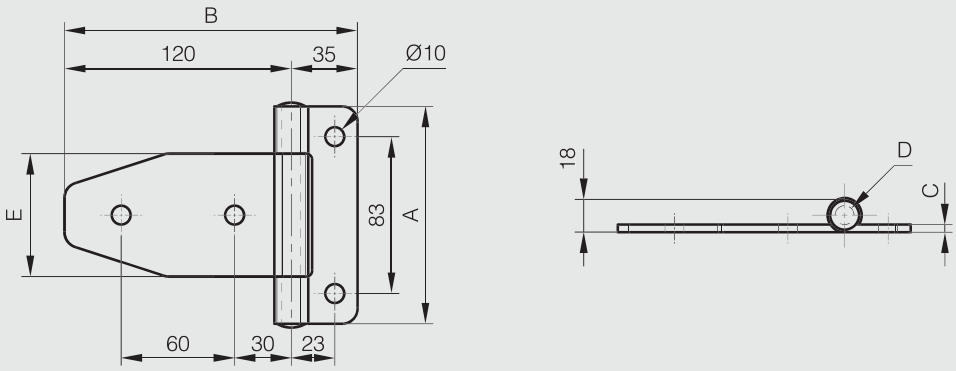

Heavy duty hinge 115 x 215 mm - 3 knuckles

304 stainless steel riveted pin.

	Part number	Material	Finish	A	B	C	D	E	Weight (g)
NEW	52-1-4144	304 stainless steel	brightened	115	215	4	10	65	650

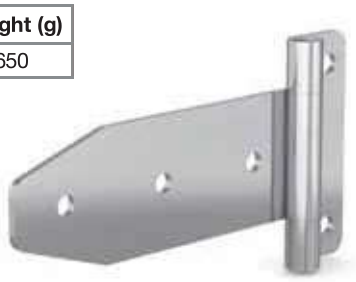

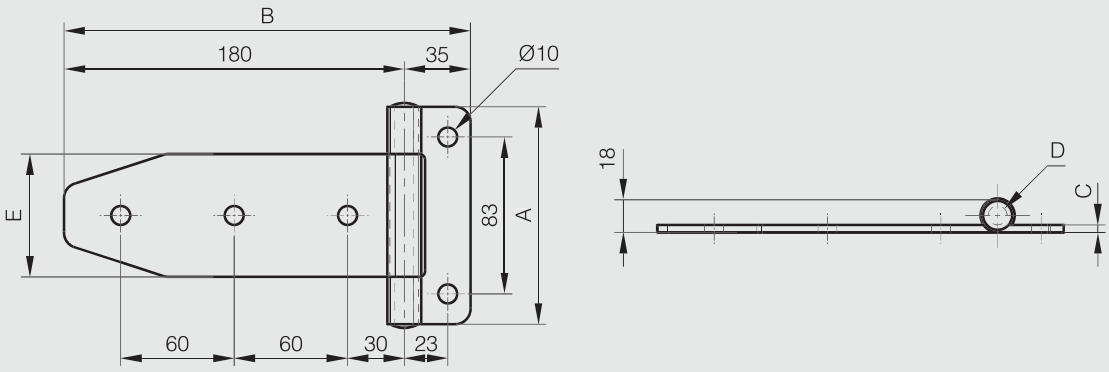

Heavy duty hinge - 66 x 230 mm

Stainless steel riveted pin.

270° STEEL RoHS

Part number	Material	Finish	A	B	C	D	S	Weight (g)
50-1-4060	steel	zinc plated	66	230	5	10	12	622

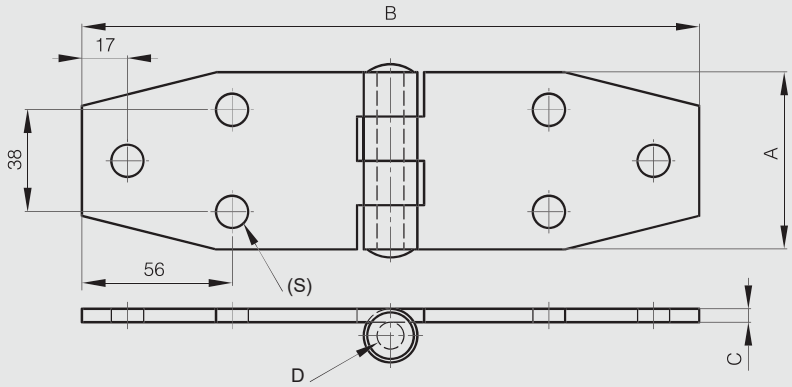

Heavy duty hinge - 66 x 215 mm

Stainless steel riveted pin.

180° STEEL RoHS

Part number	Material	Finish	A	B	C	D	S	Weight (g)
50-1-4061	steel	zinc plated	66	215	5	10	12	622

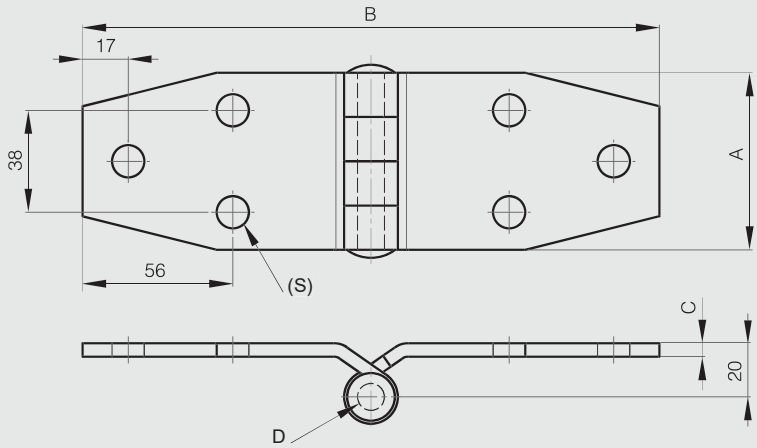

Heavy duty hinges - 65 x 230 mm

Riveted pin.

Part number	Material	Finish	A	B	C	D	E	S	Note	Weight (g)
52-1-3553	304 stainless steel	brightened	65	230	4	10	39	6.5	drilled	430
52-1-3593	304 stainless steel	brightened	65	230	4	10	39		undrilled	450

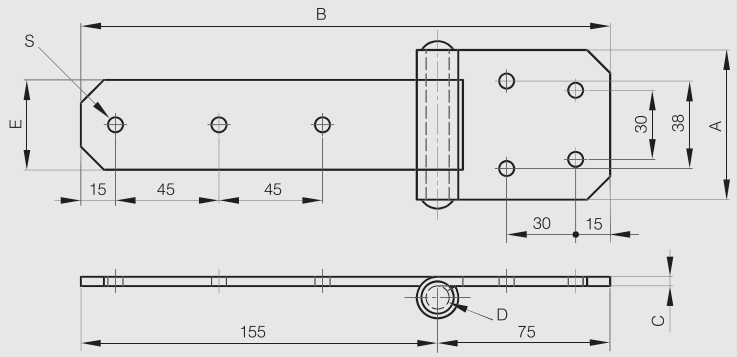

Heavy duty hinge - 130 x 95 mm

Stainless steel riveted pin.

Part number	Material	Finish	A	B	C	D	Weight (g)
50-1-3944	steel	raw	130	95	4	10	580

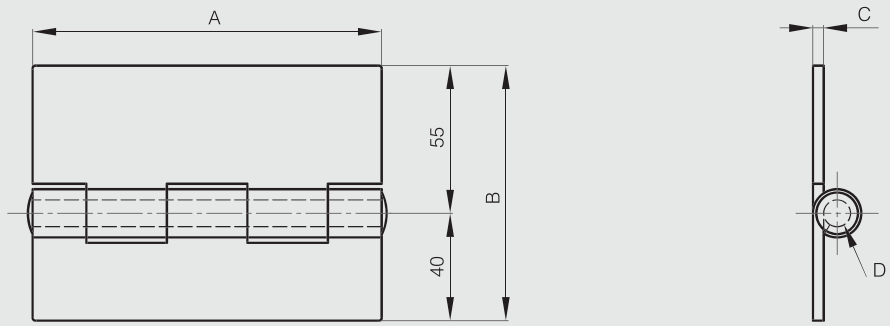

Heavy duty hinge 63.5 x 38 mm

NEW

270° STAINLESS STEEL

Hinge tested to EN1935: 2002 grades 1-7
Recommended for door weights less than 40 kg, annual usage up to 10,000 cycles.

	Part number	Material	Finish	A	B	C	D	S	Weight (g)
NEW	52-7-4126	304 stainless steel	satin polished	63.5	38	2	3	5.4	45

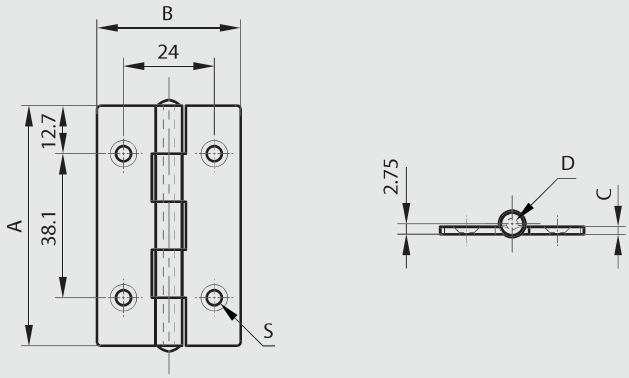

Heavy duty hinge 76 x 50 mm

NEW

270° STAINLESS STEEL

Hinge tested to EN1935: 2002 grades 1-7
Recommended for door weights less than 40 kg, annual usage up to 10,000 cycles.

	Part number	Material	Finish	A	B	C	D	S	Weight (g)
NEW	52-7-4127	304 stainless steel	satin polished	76	50	2	4	5.4	70

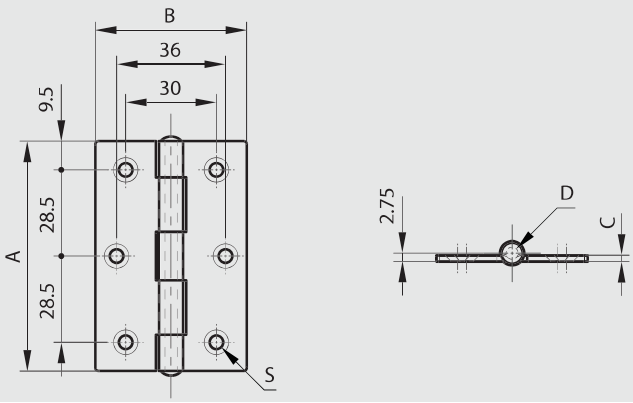

Stainless steel dual washer hinge 101.6 x 73 mm

Hinge tested to EN1935: 2002 grade 10.
Recommended for weights less than 60 kg, annual usage up to 25,000 cycles.

	Part number	Material	Finish	A	B	C	D	S	Weight (g)
NEW	52-7-4128	304 stainless steel	satin polished	101.6	73	2	6	5.4	145

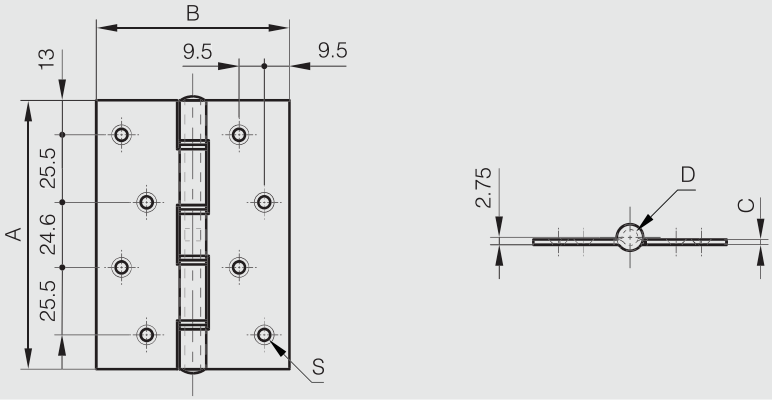

Polymer bushing and stainless steel washer hinge 101.6 x 76.2 mm

Hinge tested to EN1935: 2002 grades 12-13.
Recommended for door weights less than 120kg, annual usage up to 100,000 cycles.

	Part number	Material	Finish	A	B	C	D	S	Weight (g)
NEW	50-7-4285	steel	satin zinc	101.6	76.2	2.5	7	7.4	205
NEW	52-7-4129	304 stainless steel	satin polished	101.6	76.2	2.5	7	7.4	205

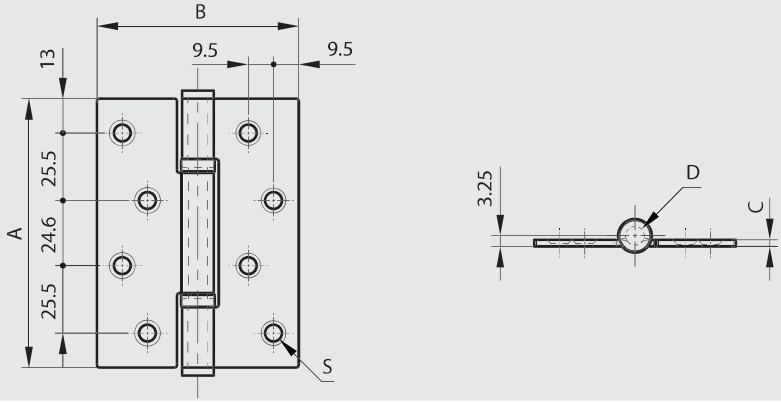

Bronze bushing hinge 101.6 x 76.2 mm

NEW

270° STAINLESS STEEL

Hinge tested to EN1935: 2002 grade 13.
Recommended for door weights less than 120 kg, annual usage up to 100,000 cycles.
Door thickness: 35 mm to 54 mm

	Part number	Material	Finish	A	B	C	D	S	Weight (g)
NEW	52-7-4130	304 stainless steel	satin polished	101.6	76.2	2.5	5	6.35	185

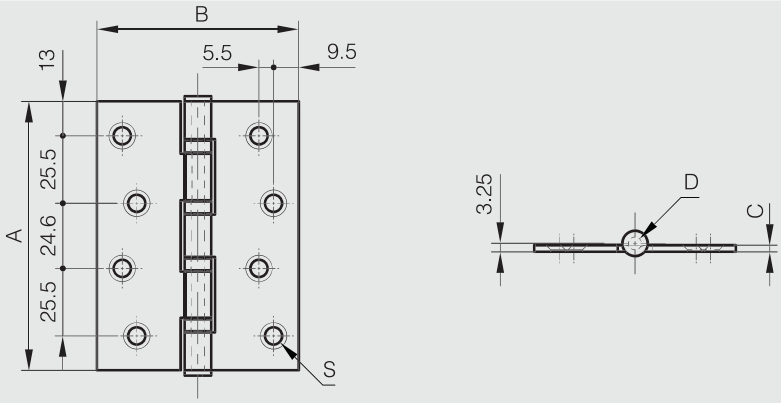

Polymer shrouded bushing hinge 101.6 x 76.2 mm

NEW

270° STAINLESS STEEL

Hinge tested to EN1935: 2002 grades 13-14.
Recommended for door weights less than 160 kg, annual usage up to 200,000 cycles.
Door thickness: 44 mm to 54 mm.

	Part number	Material	Finish	A	B	C	D	S	Weight (g)
NEW	52-7-4131	304 stainless steel	satin polished	101.6	76.2	3	7	8	235

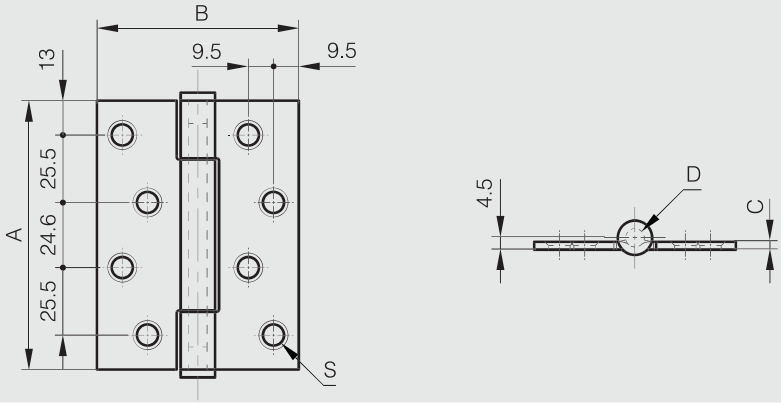

Polymer shrouded bushing hinge 101.6 x 88.9 mm

NEW

270° STAINLESS STEEL

Hinge tested to EN1935: 2002 grades 13-14.
Recommended for door weights less than 160 kg, annual usage up to 200,000 cycles.
Door thickness: 44 mm to 54 mm.
Lift-off hinge version 14-7-3902 and 14-7-3903

	Part number	Material	Finish	A	B	C	D	S	Weight (g)
NEW	52-7-4132	304 stainless steel	satin polished	101.6	88.9	3	7	8	270

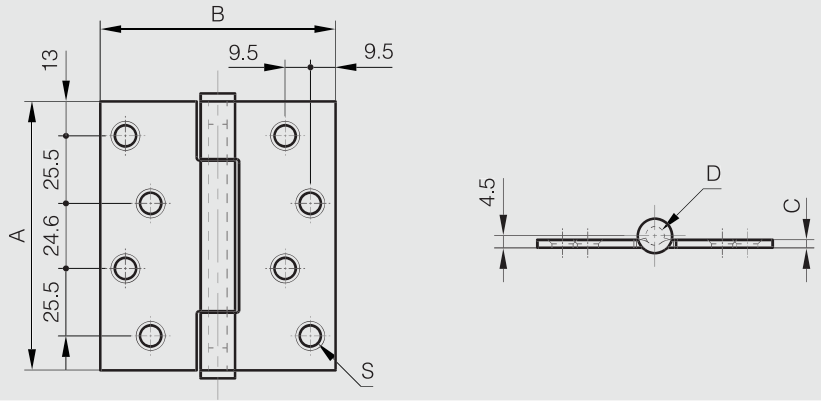

Polymer bushing lift-off hinge

NEW

270° STAINLESS STEEL

Hinge tested to EN1935: 2002 grades 13-14.
Recommended for door weights less than 160 kg, annual usage up to 200,000 cycles.
Door thickness: 44 mm to 54 mm.
Standard hinge version 52-7-4132.

	Part number	Material	Finish	A	B	C	D	S	Note	Weight (g)
NEW	14-7-3902	304 stainless steel	satin polished	101.6	88.9	3	7	8.5	Type 2	255
NEW	14-7-3903	304 stainless steel	satin polished	101.6	88.9	3	7	8.5	Type 1	255

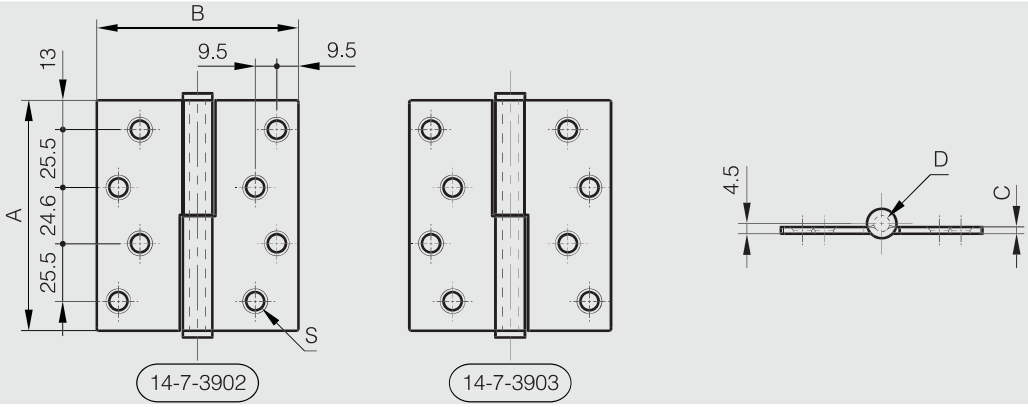

Stainless steel and bronze shrouded bushing hinge 114.3 x 114.3 mm

NEW

270° STAINLESS STEEL

Hinge tested to EN1935: 2002 grades 12-14.
Recommended for door weights less than 160 kg, annual usage up to 150,000 cycles.
For heavy duty applications.
Door thickness: 44 mm to 68 mm.

	Part number	Material	Finish	A	B	C	D	S	Weight (g)
NEW	52-7-4133	316 stainless steel	satin polished	114.3	114.3	4	9	8.5	570

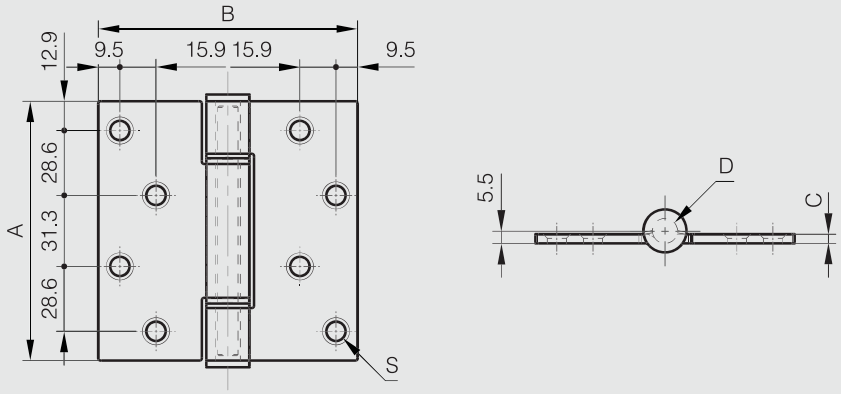

Round top weld-on steel hinges - brass washer

Fixed pin and washer.

Part number	Material	Finish	A	B	C	D	Pin material	Weight (g)
14-7-3585	steel	raw	40	10	8	5	steel	16
14-7-3573	steel	raw	60	12	10	6	steel	36
14-7-3574	steel	raw	80	16	13	8	steel	84
14-7-3575	steel	raw	100	20	16	10	steel	160
14-7-3586	steel	raw	120	20	16	11	steel	195
14-7-3587	steel	raw	135	22.5	18	12	steel	270
14-7-3576	steel	raw	150	25.5	20	13	steel	390
14-7-3794	steel	raw	180	25.5	20	13	steel	465
14-7-3588	steel	raw	200	29	23	16	steel	660
14-7-3589	steel	raw	40	10	8	5	brass	16
14-7-3590	steel	raw	60	12	10	6	brass	36
14-7-3591	steel	raw	80	16	13	8	brass	84
14-7-3592	steel	raw	100	20	16	10	brass	160
14-7-3593	steel	raw	120	20	16	11	brass	195
14-7-3594	steel	raw	135	22.5	18	12	brass	270
14-7-3595	steel	raw	150	25.5	20	13	brass	390
14-7-3596	steel	raw	200	29	23	16	brass	660

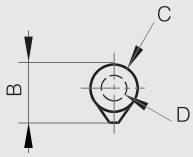

Round top weld-on steel hinges - steel pin - ball bearing

Fixed pin.

Part number	Material	Finish	A	B	C	D	Weight (g)
14-7-3610	steel	raw	141	22.5	18	12	272
14-7-3611	steel	raw	155.5	25.5	20	13	392
14-7-3612	steel	raw	206	29	23	16	662

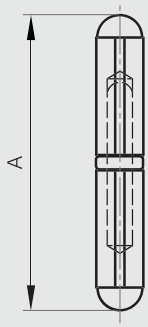

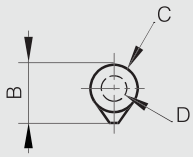

Round top weld-on steel hinges - steel pin - brass washer - with grease nipple

180° STEEL RoHS

Fixed pin and washer.

Part number	Material	Finish	A	B	C	D	Weight (g)
14-7-3796	steel	raw	60	12	10	6	36
14-7-3786	steel	raw	80	16	13	8	84
14-7-3787	steel	raw	100	20	16	10	160
14-7-3788	steel	raw	120	20	16	11	195
14-7-3793	steel	raw	135	22.5	18	12	270
14-7-3789	steel	raw	150	25.5	20	13	390
14-7-3790	steel	raw	180	25.5	20	13	465
14-7-3791	steel	raw	200	29	23	16	660

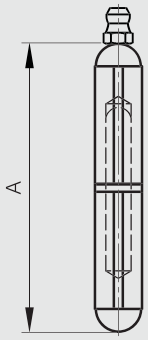

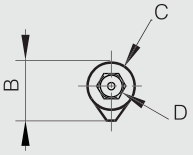

Round top weld-on aluminium hinges - stainless steel pin - stainless steel washer

180° ALU

Part number	Material	Finish	A	B	C	D	Weight (g)
14-7-3815	aluminium	raw	60	12	10	6	20
14-7-3816	aluminium	raw	80	16	13	8	40
14-7-3817	aluminium	raw	100	20	16	10	75
14-7-3818	aluminium	raw	120	20	16	11	93

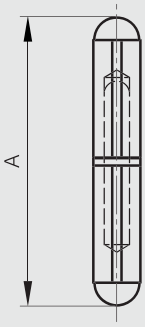

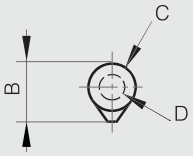

Flat top weld-on steel hinges - brass washer

Fixed pin and washer.

Part number	Material	Finish	A	B	C	D	Pin material	Weight (g)
14-7-3583	steel	raw	45	10	8	5	steel	20
14-7-3569	steel	raw	60	12	10	6	steel	40
14-7-3570	steel	raw	80	16	13	7	steel	90
14-7-3571	steel	raw	100	20	16	9	steel	115
14-7-3603	steel	raw	120	20	16	9	steel	135
14-7-3572	steel	raw	140	25.5	20	11	steel	370
14-7-3584	steel	raw	200	29	23	16	steel	600
14-7-3597	steel	raw	45	10	8	5	brass	20
14-7-3598	steel	raw	60	12	10	6	brass	40
14-7-3599	steel	raw	80	16	13	7	brass	90
14-7-3600	steel	raw	100	20	16	9	brass	115
14-7-3604	steel	raw	120	20	16	9	brass	135
14-7-3601	steel	raw	140	25.5	20	11	brass	370

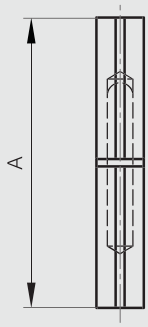

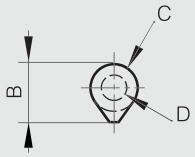

Flat top weld-on stainless steel hinges - stainless steel pin - brass washer

Fixed pin and washer. Produced mainly in stainless steel, for a complete description of the materials contact us.

Part number	Material	Finish	A	B	C	D	Weight (g)
14-7-3693	304 stainless steel	raw	60	12	10	6	40
14-7-3696	304 stainless steel	raw	80	16	13	7	90
14-7-3697	304 stainless steel	raw	100	20	16	9	115
14-7-3698	304 stainless steel	raw	120	20	16	9	135

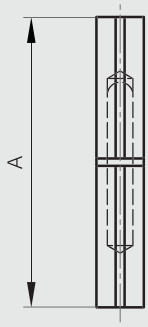

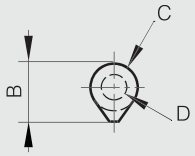

Flag hinges A - steel pin - brass washer

Fixed pin.

Part number	Material	Finish	A	B	C	D	E	Weight (g)
14-7-3634	steel	raw	63	80	4.2	8	15.5	150
14-7-3635	steel	raw	83.5	80	5.1	8	16	250
14-7-3636	steel	raw	104	92	5.5	9	17	390
14-7-3637	steel	raw	124	108	6.5	10	19	600
14-7-3638	steel	raw	144	108	6.5	10	19	720

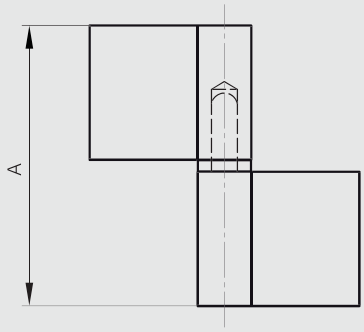

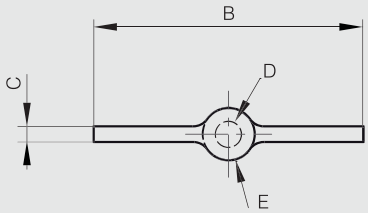

Flag hinges B - steel pin - brass washer

Fixed pin.

Part number	Material	Finish	A	B	C	D	E	Note	Weight (g)
14-7-3641	steel	raw	83.5	80	5.1	8	16	type 1	250
14-7-3642	steel	raw	83.5	80	5.1	8	16	type 2	250

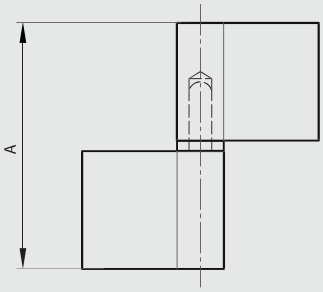

14-7-3641

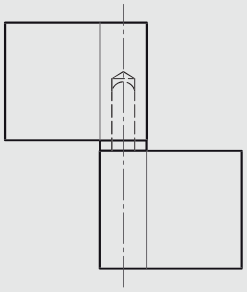

14-7-3642

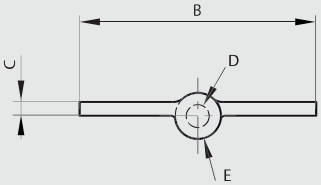

Heavy duty pin hinges

With chamfered edges.
Produced mainly in stainless steel, for a complete description of the materials contact us.

Part number	Material	Finish	A	B	C	D	E	F	H	S	Weight (g)
12-7-3810	303 stainless steel	brushed	64	13	16	6	16	16	9.5	M5x6	90
12-7-3811	303 stainless steel	brushed	76	13	19	6	19	18	13	M6x7.5	130

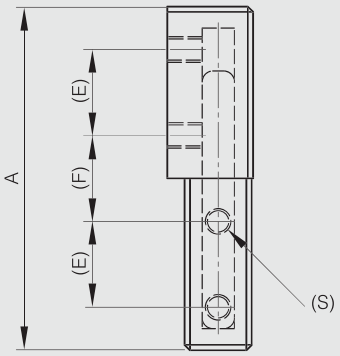

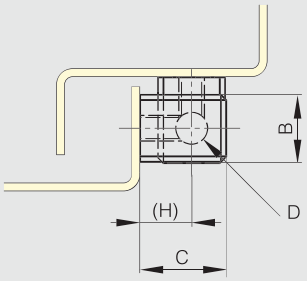

Carbon Kevlar hinges - 36 mm width

270° POLYMER RoHS

Hinge is constructed of rigid leaves and a flex unit.
The rigid leaves are woven carbon fibre in an epoxy matrix.
The Kevlar flex units are impregnated with a flexible urethane.
Design for bonding.
No metallic component. Ultra light, ultra thin.

Part number	Material	Finish	A	B	C	Weight (g)
54-1-3600	carbon / Kevlar	black	50	36	0.8	2
54-1-3601	carbon / Kevlar	black	100	36	0.8	3

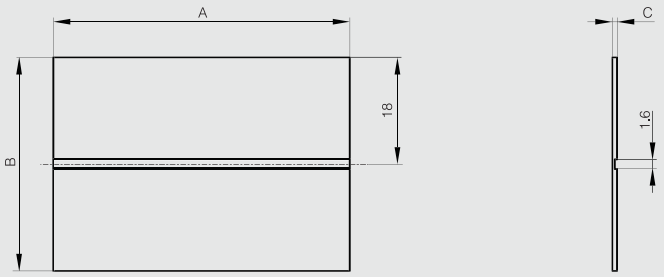

Carbon Kevlar hinges - 50 mm width

270° POLYMER RoHS

Hinge is constructed of rigid leaves and a flex unit.
The rigid leaves are woven carbon fibre in an epoxy matrix.
The Kevlar flex units are impregnated with a flexible urethane.
Design for bond or screws assembly.
Part number 54-7-3602 tested to over one million cycles through an 80° arc.
No metallic component. Ultra light, ultra thin.

Part number	Material	Finish	A	B	C	Weight (g)
54-1-3602	carbon / Kevlar	black	50	50	1.5	4
54-1-3603	carbon / Kevlar	black	100	50	1.5	10
54-1-3604	carbon / Kevlar	black	600	50	1.5	51

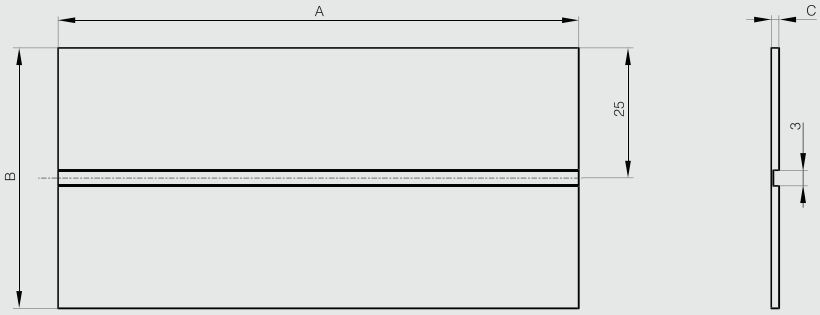

Carbon Kevlar hinges with glass fibre - 50 mm width

Hinge is constructed of rigid leaves and a flex unit.
The rigid leaves are a glass fibre carbon hybrid.
The Kevlar flex units are impregnated with a flexible urethane.
Design for bond or screws assembly.
No metallic component. Ultra light, ultra thin.

Part number	Material	Finish	A	B	C	Weight (g)
54-1-3605	carbon / glass fibre / Kevlar	black	50	50	2.5	10
54-1-3606	carbon / glass fibre / Kevlar	black	100	50	2.5	20

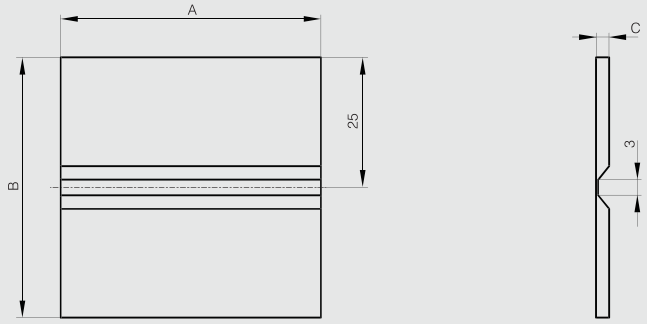

Square design hinges with countersunk holes

Hinges are made of 30% GF polyamide, pins are in 316L stainless steel.
UL 94 V-0 classification: please contact us.
White color: please contact us.

Part number	Material	Finish	A	B	C	D	E	F	G	S	Weight (g)
54-1-3564	polyamide	black	30	30	3	3	3.5	18	18	3.2	6
54-1-3565	polyamide	black	40	40	5.2	4	5.7	25	25	5.3	13
54-1-3566	polyamide	black	50	50	5.9	5	6.4	30	30	6.4	23
54-1-3567	polyamide	black	60	60	6.5	6	7	36	36	6.4	40

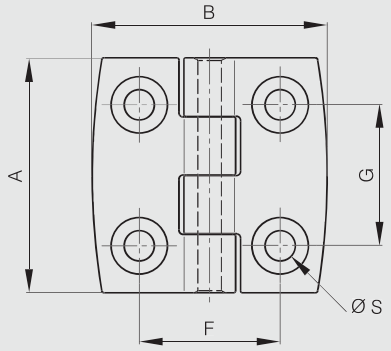

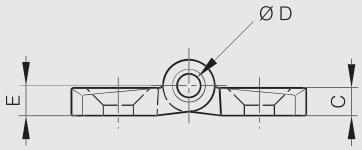

Square design hinges with studs

Hinges are made of 30% GF polyamide, pin is in 316L stainless steel and studs are in 304 stainless steel.
UL 94 V-0 classification: please ask us.
White color: please ask us.

Part number	Material	Finish	A	B	C	D	E	F	G	Weight (g)
54-1-3568	polyamide	black	60	60	6.5	6	7	36	36	62

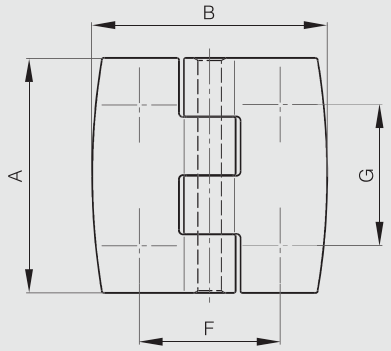

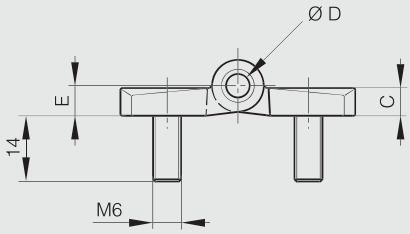

Symmetrical design hinges

Hinges are made of 30% GF polyamide, pins are in 316L stainless steel.
UL 94 V-0 classification: please contact us.
White color: please contact us.

Part number	Material	Finish	A	B	C	D	E	F	G	H	S	Weight (g)
54-1-3569	polyamide	black	40	80	5.2	4	5.7	13.5	25	19	5.3	20
54-1-3570	polyamide	black	40	120	5.2	4	5.7	14.5	25	38	5.3	25
54-1-3571	polyamide	black	50	100	5.9	5	6.4	16	30	24	6.4	35
54-1-3572	polyamide	black	60	120	6.5	6	7	18	36	30	6.4	62

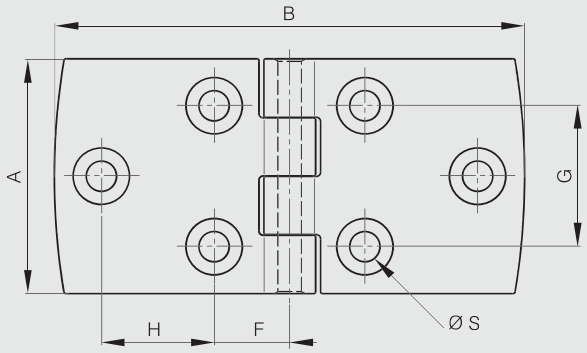

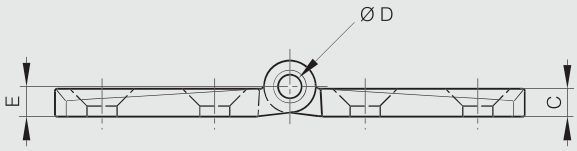

Asymmetrical design hinges

Hinges are made of 30% GF polyamide, pins are in 316L stainless steel.
UL 94 V-0 classification: please contact us.
White color: please contact us.

Part number	Material	Finish	A	B	C	D	E	F	G	H	S	Weight (g)
54-1-3573	polyamide	black	40	60	5.2	4	5.7	13	25	19	5.3	16
54-1-3574	polyamide	black	40	80	5.2	4	5.7	13.5	25	38	5.3	19
54-1-3575	polyamide	black	50	75	5.9	5	6.4	15.5	30	24	6.4	30
54-1-3576	polyamide	black	60	90	6.5	6	7	18	36	30	6.4	49

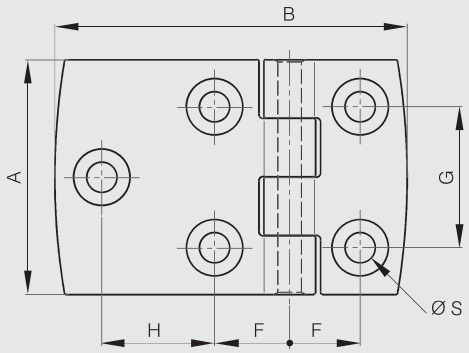

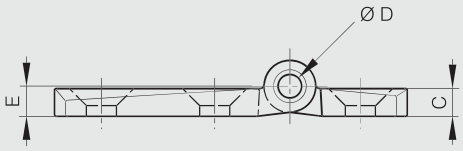

Polyamide hinges with countersunk holes

Hinges are made of 30% GF polyamide, pins are in 304 stainless steel.

Part number	Material	Finish	A	B	C	D	E	F	G	H	S	Weight (g)
54-1-3029	polyamide	black	40	40	5	4	5.5	25	25	9	5.3	14
54-1-3030	polyamide	black	50	50	6	6	6.5	30	30	11.5	6.4	29

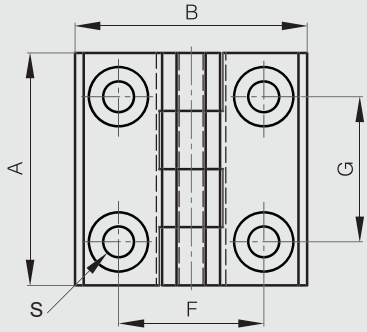

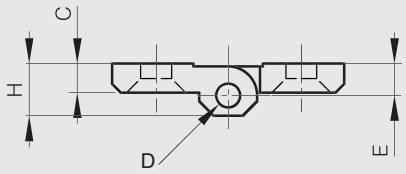

Polyamide hinges with studs

Hinges are made of 30% GF polyamide, pins are in 304 stainless steel.

Part number	Material	Finish	A	B	C	D	E	F	G	H	L	M	Weight (g)
54-1-3031	polyamide	black	40	40	5	4	5.5	25	25	9	11	M5	56
54-1-3032	polyamide	black	50	50	6	6	6.5	30	30	11.5	15	M6	76

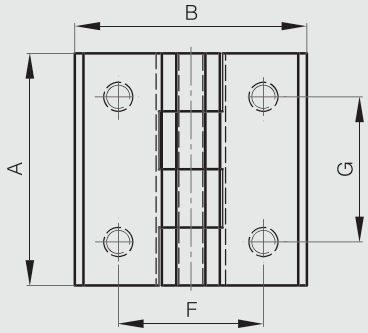

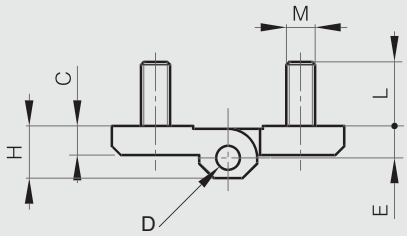

Polyamide hinges combined studs and holes

Hinges are made of 30% GF polyamide, pins are in 304 stainless steel.

Part number	Material	Finish	A	B	C	D	E	F	G	H	L	M	S	Weight (g)
54-1-3033	polyamide	black	40	40	5	4	5.5	25	25	9	11	M5	5.3	50
54-1-3034	polyamide	black	50	50	6	6	6.5	30	30	11.5	15	M6	6.4	50

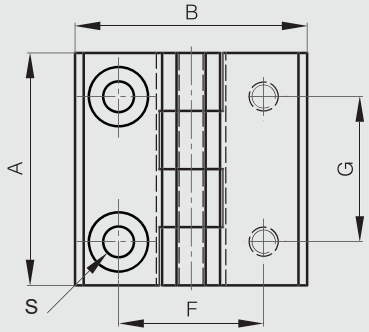

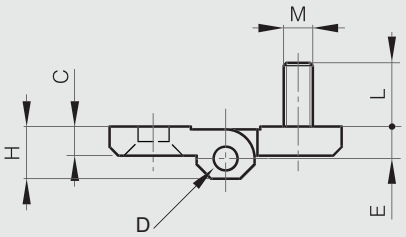

Heavy duty plastic hinge - 180° opening

Nickel plated steel pin. Max. 180° opening.

Part number	Material	Finish	A	B	C	D	Weight (g)
54-1-9000	polyamide	black	108	131	9.5	6	100

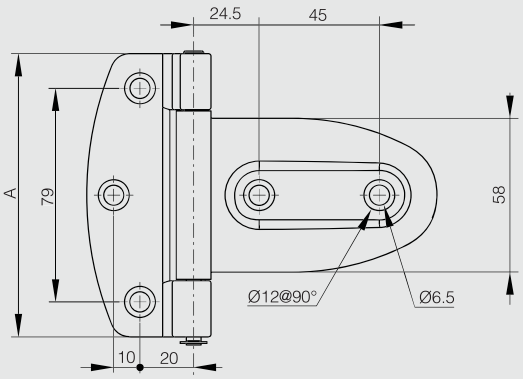

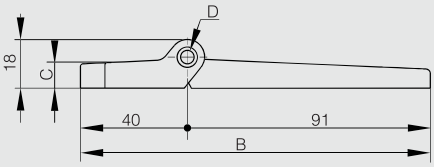

4-hole square polyamide hinge with carbon fibre

NEW

270° POLYMER RoHS

Hinge is made of 30% carbon fibre 6.6 PA.
Pin: 303 stainless steel.

Cycling test : hinge is functional after 10.000 cycles (open/close) for a 80 kg door (dimension 1500 (H) x 750 (W) mm).

	Part number	Material	Finish	A	B	C	D	E	Pin material	Weight (g)
NEW	54-1-3555	polyamide	black	80	80	7.8	7	8.25	303 stainless steel	68

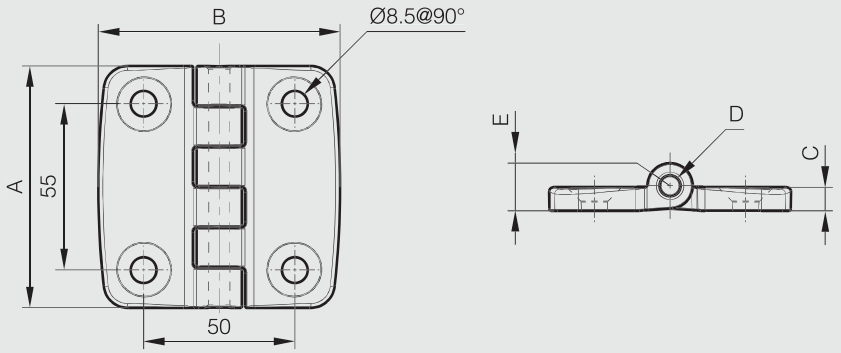

6-hole square polyamide hinges with carbon fibre

NEW

270° POLYMER RoHS

Hinges are made of 30% carbon fibre 6.6 PA.
Pin: 303 stainless steel.

	Part number	Material	Finish	A	B	C	D	E	F	G	H	Pin material	Weight (g)
NEW	54-1-3558	polyamide	black	100	100	7.8	7	8.25	48	75	15	303 stainless steel	95
NEW	54-1-3561	polyamide	black	120	120	8	8	9.3	55	90	17.5	303 stainless steel	140

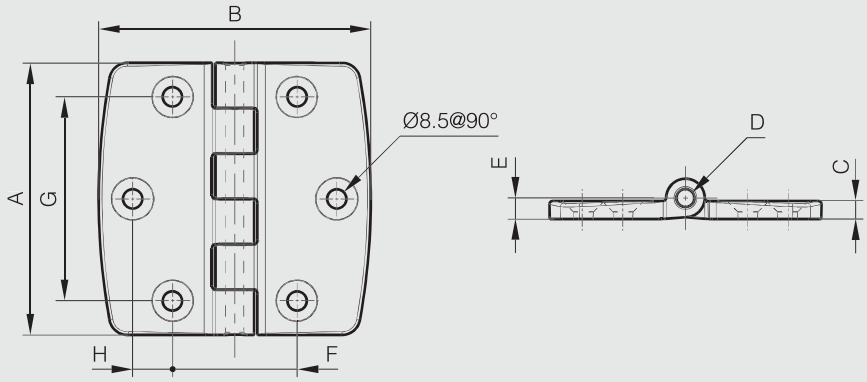

Symetrical polyamide hinges with carbon fibre

NEW

270° POLYMER RoHS

Hinges are made of 30% carbon fibre 6.6 PA.
Pin: 303 stainless steel.

	Part number	Material	Finish	A	B	C	D	E	F	G	H	Pin material	Weight (g)
NS	54-1-3557	polyamide	black	80	160	7.8	7	8.25	50	55	40	303 stainless steel	115
NEW	54-1-3560	polyamide	black	100	200	7.8	7	8.25	48	75	62	303 stainless steel	135
NEW	54-1-3563	polyamide	black	120	240	8	8	9.3	55	90	77.5	303 stainless steel	195

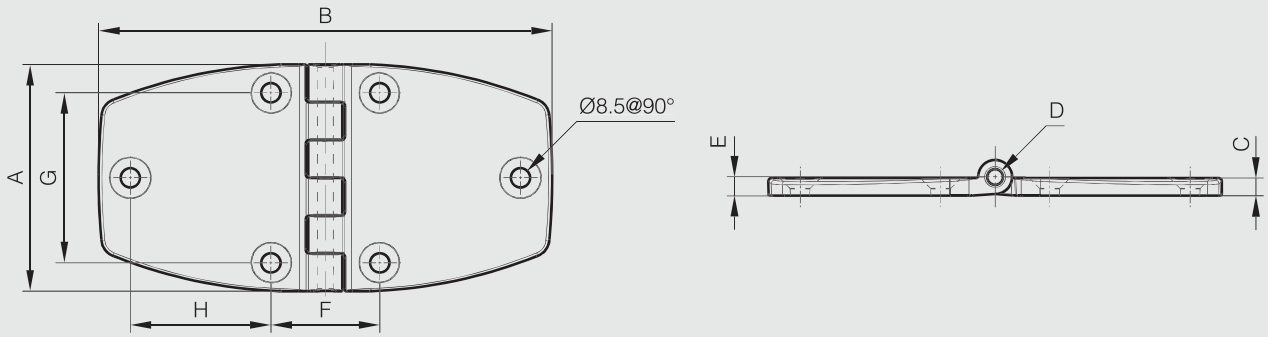

Asymmetrical polyamide hinges with carbon fibre

NEW

270° POLYMER RoHS

Hinges are made of 30% carbon fibre 6.6 PA.
Pin: 303 stainless steel.

	Part number	Material	Finish	A	B	C	D	E	F	G	H	J	K	Pin material	Weight (g)
NS	54-1-3556	polyamide	black	80	120	7.8	7	8.25	50	55	40		40	303 stainless steel	100
NEW	54-1-3559	polyamide	black	100	150	7.8	7	8.25	48	75	62	15	50	303 stainless steel	115
NEW	54-1-3562	polyamide	black	120	180	8	8	9.3	55	90	77.5	17.5	60	303 stainless steel	168

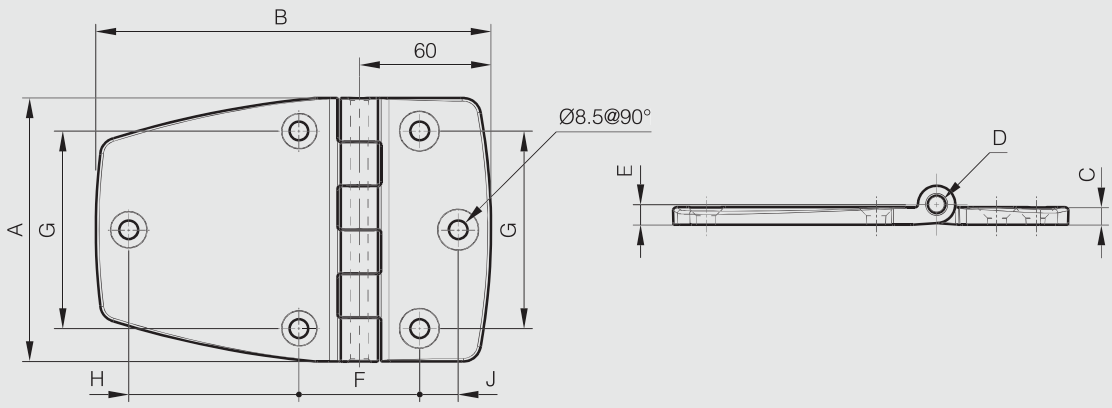

Polymer hinges with pin

Plastic hinge 63.5 mm long

Same material for pin and leaves.

180° POLYMER RoHS

Part number	Material	Finish	A	B	C	S	Note	Weight (g)
54-7-3028	polyethylene	natural	63.5	54	5	6.2	drilled	20

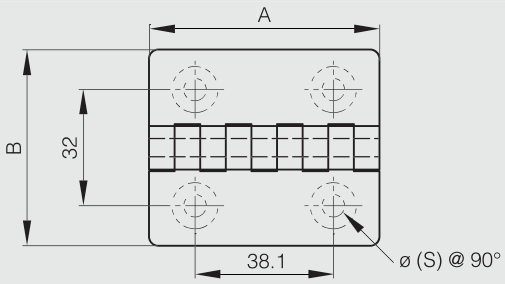

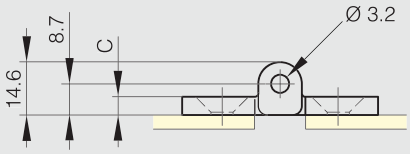

Plastic hinges 63.5 mm long with reversed leaves

Same material for pin and leaves.

180° POLYMER RoHS

Part number	Material	Finish	A	B	C	Weight (g)
54-7-3023	polypropylene	white	63.5	54	5	20
54-7-3027	polycarbonate	transparent	63.5	54	5	26

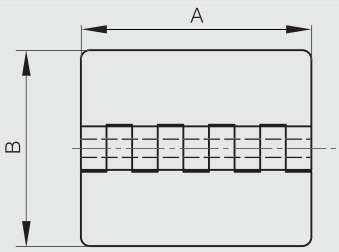

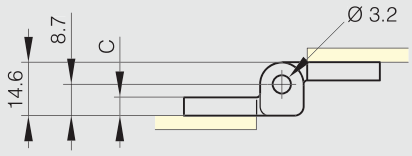

Lift-off hinges in plastic

Hinges are made of 15% GF polyamide, pins are in 303 stainless steel.

Part number	Material	Finish	A	B	C	D	S	Note	Weight (g)
14-7-3722	polyamide	black	74	60	7	9.5	5	type 1	53
14-7-3723	polyamide	black	74	60	7	9.5	5	type 2	53

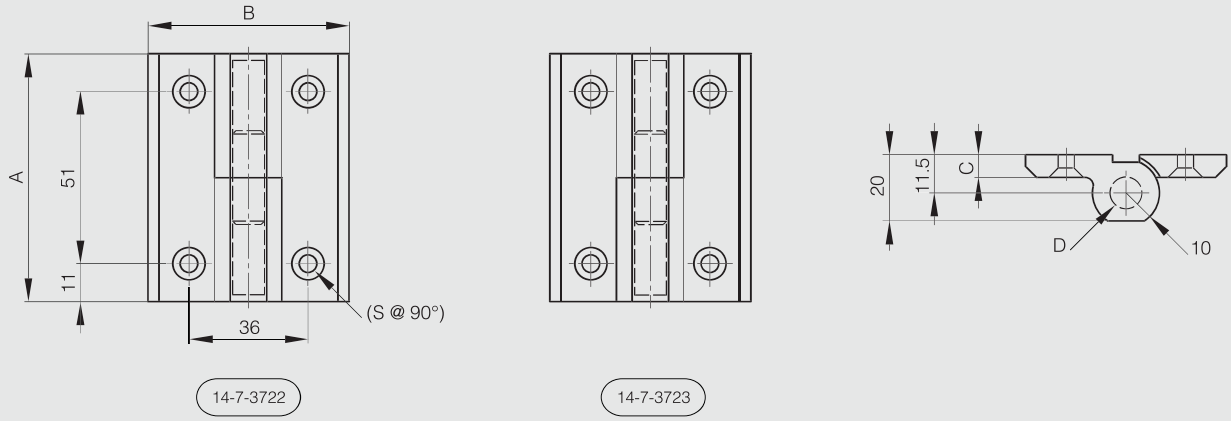

Plastic hinges 25.4 mm long

Technical features:
- Temperature: -40°C up to +80°C.
- Can be fixed with: rivets, screws, nails or clamps.
- Chemical resistance: oil, solvents, sea water and most chemical agents.
- Tensile resistance: 180 N/cm.
- Material offers excellent fatigue resistance.

Part number	Material	Finish	A	B	C	S	Weight (g)
54-7-3000	polypropylene	white	25.4	76.2	3.2	3.2	5
54-7-3002	polypropylene	black	25.4	76.2	3.2	3.2	5

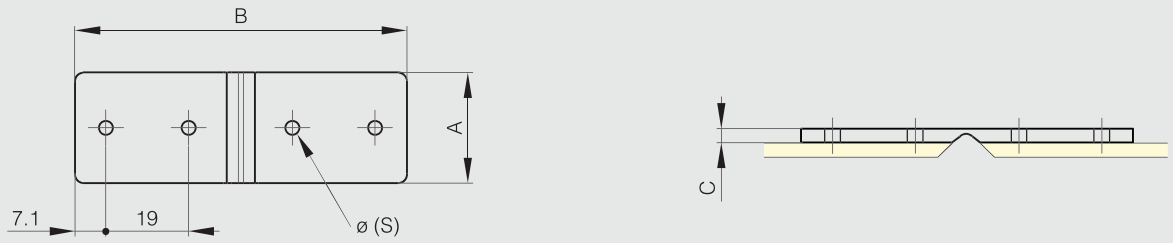

Plastic hinges 38.1 mm and 50.8 mm long

Technical features:
- Temperature: -40°C up to +80°C.
- Can be fixed with: rivets, screws, nails or clamps.
- Chemical resistance: oil, solvents, sea water and most chemical agents.
- Tensile resistance: 180 N/cm.
- Material offers excellent fatigue resistance.

Part number	Material	Finish	A	B	C	F	G	S	Weight (g)
54-7-3006	polypropylene	white	38.1	25.4	1.6	15.9	28.6	3.43	5
54-7-3008	polypropylene	black	38.1	25.4	1.6	15.9	28.6	3.43	5
54-7-3003	polypropylene	white	50.8	38.1	3.2	22.2	33.3	3.43	5
54-7-3005	polypropylene	black	50.8	38.1	3.2	22.2	33.3	3.43	5

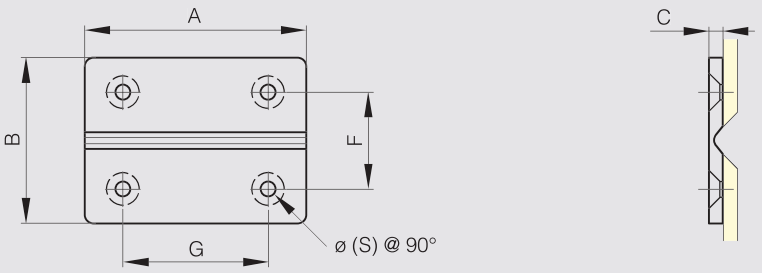

Plastic hinges 76.2 mm long

Technical features:
- Temperature: -40°C up to +80°C.
- Can be fixed with: rivets, screws, nails or clamps.
- Chemical resistance: oil, solvents, sea water and most chemical agents.
- Tensile resistance: 180 N/cm.
- Material offers excellent fatigue resistance.

Part number	Material	Finish	A	B	C	S	Weight (g)
54-7-3009	polypropylene	white	76.2	63.5	4.76	4.62	17
54-7-3011	polypropylene	black	76.2	63.5	4.76	4.62	16

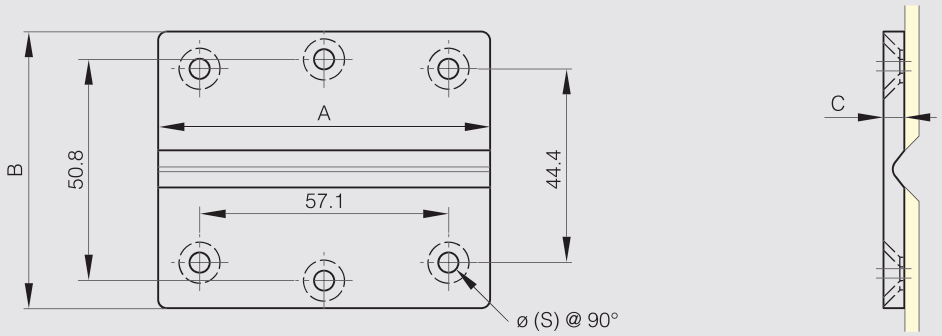

Plastic hinges 88.9 mm and 101.6 mm long

Technical features:
- Temperature: -40°C up to +80°C.
- Can be fixed with: rivets, screws, nails or clamps
- Chemical resistance: oil, solvents, sea water and most chemical agents.
- Tensile resistance: 180 N/cm.
- Material offers excellent fatigue resistance.

Part number	Material	Finish	A	B	C	E	F	G	H	S	Weight (g)
54-7-3012	polypropylene	white	88.9	88.9	6.35	71.4	54	73		6	37
54-7-3014	polypropylene	black	88.9	88.9	6.35	71.4	54	73		6	35
54-7-3015	polypropylene	white	101.6	101.6	6.35	79.4	54	83.4	27.8	8	50
54-7-3017	polypropylene	black	101.6	101.6	6.35	79.4	54	83.4	27.8	8	50

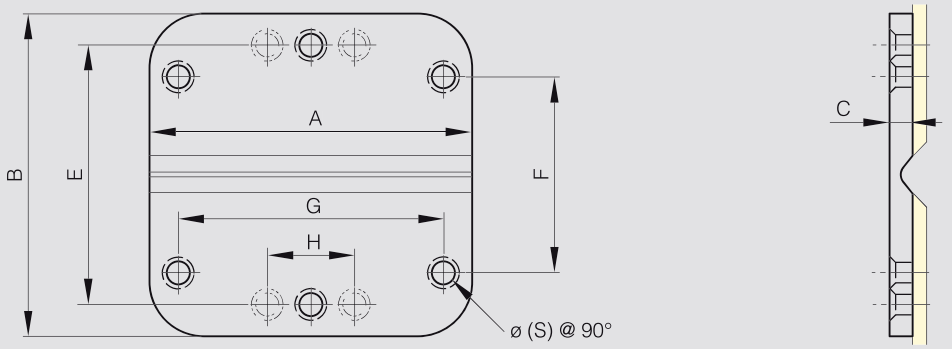

Polymer continuous hinges in 15.25 meter rolls

Technical features:
- Temperature: -40°C up to +80°C.
- Can be fixed with: rivets, screws, nails or clamps.
- Chemical resistance: oil, solvents, sea water and most chemical agents.
- Tensile resistance: 180 N/cm.
- Material offers excellent fatigue resistance.

Part number	Material	Finish	B	C	Weight (g)
44-7-3000	polypropylene	white	28.6	3.2	1080
44-7-3001	polypropylene	grey	28.6	3.2	1080
44-7-3002	polypropylene	black	28.6	3.2	1080
44-7-3003	polypropylene	white	38.1	3.2	1450
44-7-3004	polypropylene	grey	38.1	3.2	1450
44-7-3005	polypropylene	black	38.1	3.2	1450
44-7-3006	polypropylene	white	50.8	3.2	2300
44-7-3007	polypropylene	grey	50.8	3.2	2300
44-7-3008	polypropylene	black	50.8	3.2	2300
44-7-3009	polypropylene	white	76.2	3.2	3100
44-7-3010	polypropylene	grey	76.2	3.2	3100
44-7-3011	polypropylene	black	76.2	3.2	3100

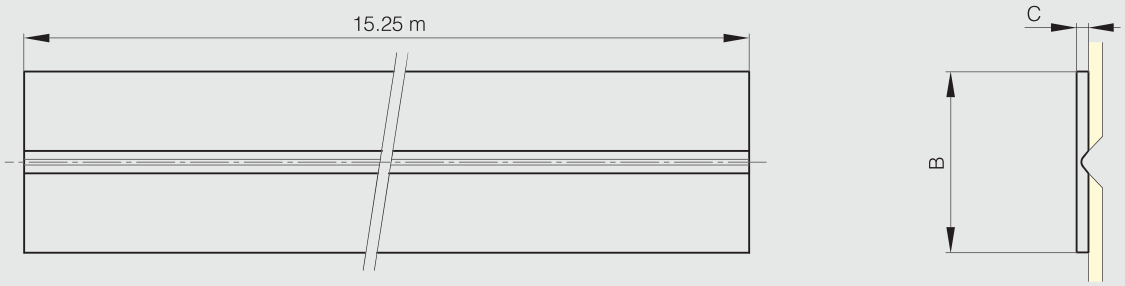

Square design stainless steel hinge

Hinges: 304 stainless steel.
Pin: 304 stainless steel.

Models equivalent to square design polyamide hinges (part number 54-1-3565 and 54-1-3566).

	Part number	Material	Finish	A	B	C	D	E	F	G	S	Weight (g)
NEW	72-1-4416	304 stainless steel	brightened	40	40	5.2	4	5.7	25	25	5.3	60
NEW	72-1-4417	304 stainless steel	brightened	50	50	5.9	5	6.4	30	30	6.4	100

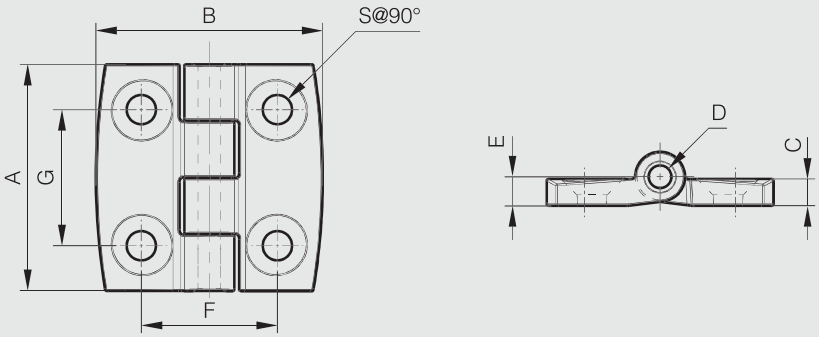

Hinge 30 x 30 mm

Part number	Material	Finish	A	B	C	D	S	Weight (g)
52-1-4038	304 stainless steel	raw	30	30	0.8	2	3.3	8

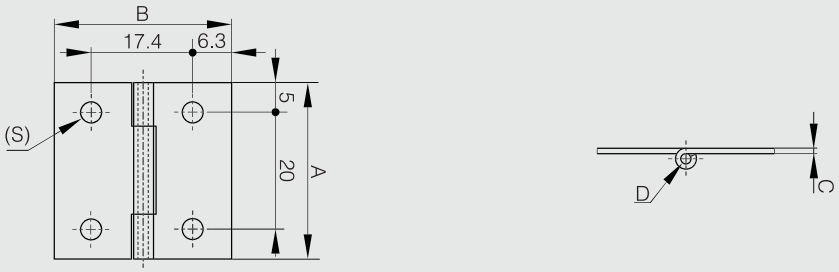

Square hinges with two offset leaves and removable pin - no holes

Removable pin.

Part number	Material	Finish	A	B	C	D	Weight (g)
50-7-3347	steel	raw	40	40	2	4	36
50-7-3348	steel	raw	50	50	2	6	64
50-7-3349	steel	raw	60	60	2	6	84
50-7-3350	steel	raw	70	70	2	6	112

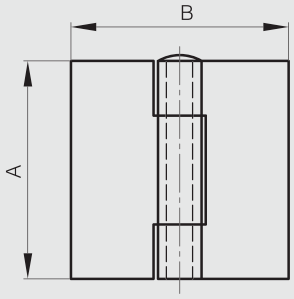

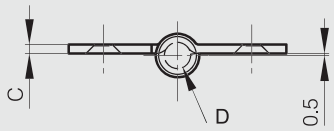

Square hinges with two offset leaves and removable pin - with 4 holes

Removable pin.

	Part number	Material	Finish	A	B	C	D	F	G	S	Weight (g)
NEW	50-1-3580	steel	zinc plated	40	40	2	4	7	24	4.3	34
NEW	50-1-3581	steel	zinc plated	50	50	2	6	8	34	5	61
NEW	50-1-3582	steel	zinc plated	60	60	2	6	8	40	4.5	85
	52-1-3608	304 stainless steel	raw	40	40	2	4	8	24	4	34
	52-1-3610	304 stainless steel	raw	50	50	2	6	8	34	4.5	61
	52-1-3612	304 stainless steel	raw	60	60	2	6	8	40	4.5	82

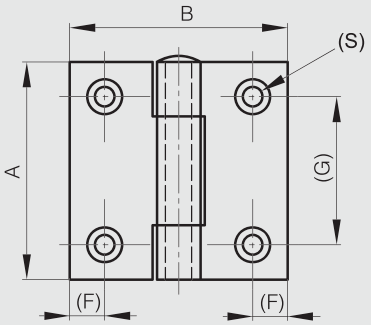

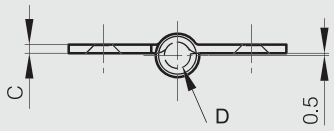

Square hinges with two offset leaves and removable pin - with 6 holes

Removable pin.

	Part number	Material	Finish	A	B	C	D	F	G	H	S	Note	Weight (g)
	50-7-3583	steel	zinc plated	70	70	2	6	8	50	10	4		156
	50-7-3584	steel	zinc plated	80	80	2.5	6	8	60	12.5	4		168
	52-1-3614	304 stainless steel	raw	70	70	2	6	8	50	10	4.5		156
NS	52-1-4107	304 stainless steel	raw	70	70	2	6	8	50	10	4.5	with M5 studs	174
	52-1-3616	304 stainless steel	raw	80	80	2.5	6	8	60	12.5	4.5		164
NS	52-1-4110	304 stainless steel	raw	80	80	2.5	6	8	60	12.5	4.5	with M5 studs	182

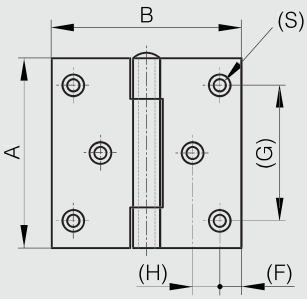

52-1-3614 & 52-1-3616

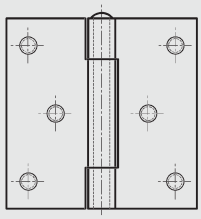

52-1-4107 & 52-1-4110

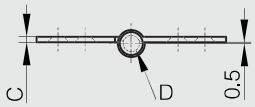

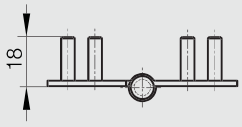

Square hinges with two offset leaves and riveted pin - with 4 holes

Riveted pin.

Part number	Material	Finish	A	B	C	D	F	G	S	Weight (g)
52-1-3609	304 stainless steel	raw	40	40	2	4	8	24	4	34
52-1-3611	304 stainless steel	raw	50	50	2	6	8	34	4.5	61
52-1-3613	304 stainless steel	raw	60	60	2	6	8	40	4.5	82
52-1-3872	316L stainless steel	raw	40	40	2	4	8	24	4	34
52-1-3709	316L stainless steel	raw	50	50	2	6	8	34	4.5	61
52-1-3873	316L stainless steel	raw	60	60	2	6	8	40	4.5	82

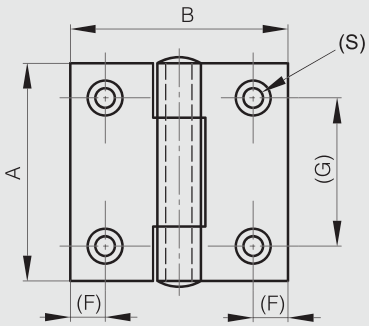

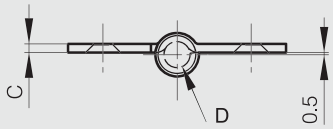

Square hinges with two offset leaves and riveted pin - with 6 holes

NEW

270° STAINLESS STEEL RoHS

Riveted pin.

	Part number	Material	Finish	A	B	C	D	F	G	H	S	Note	Weight (g)
	52-1-3615	304 stainless steel	raw	70	70	2	6	8	50	10	4.5		156
NS	52-1-4108	304 stainless steel	raw	70	70	2	6	8	50	10	4.5	with M5 studs	174
	52-1-3617	304 stainless steel	raw	80	80	2.5	6	8	60	12.5	4.5		164
NS	52-1-4111	304 stainless steel	raw	80	80	2.5	6	8	60	12.5	4.5	with M5 studs	182

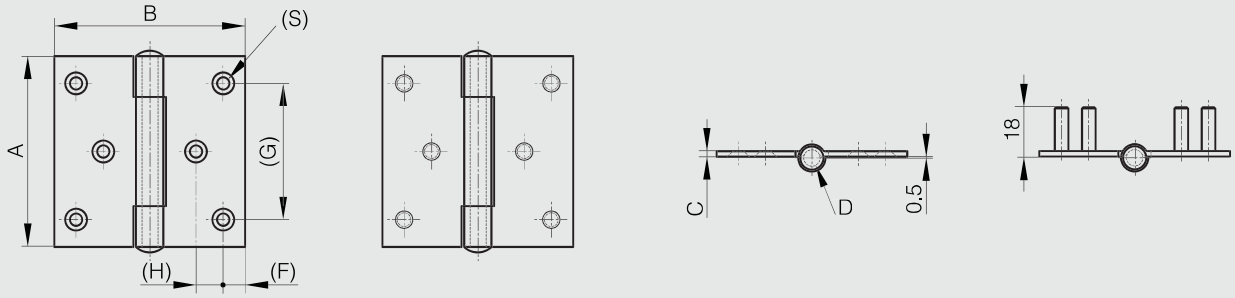

52-1-3615 & 52-1-3617

52-1-4108 & 52-1-4111

Square hinges with no offset leaf and riveted pin - no holes

270° STAINLESS STEEL STEEL RoHS

Riveted pin.

Part number	Material	Finish	A	B	C	D	Weight (g)
50-1-3916	steel	raw	40	40	2	4	36
50-1-3917	steel	raw	50	50	2	6	63
50-1-3648	steel	raw	50	50	2.5	4.5	75
50-1-3918	steel	raw	60	60	2	6	84
50-1-3919	steel	raw	70	70	2	6	112
50-1-3920	steel	raw	80	80	2.5	6	169
50-1-3921	steel	raw	100	100	2.5	6	248
52-1-3679	304 stainless steel	raw	40	40	2	4	37
52-1-3694	304 stainless steel	raw	50	50	2	6	62
52-1-3695	304 stainless steel	raw	60	60	2	6	82
52-1-3864	304 stainless steel	raw	70	70	2	6	112
52-1-3865	304 stainless steel	raw	80	80	2.5	6	168
52-1-3866	304 stainless steel	raw	100	100	2.5	6	250
52-1-3869	316L stainless steel	raw	40	40	2	4	37
52-1-3870	316L stainless steel	raw	50	50	2	6	61
52-1-3871	316L stainless steel	raw	60	60	2	6	90

Square hinges with no offset leaf and riveted pin - with 4 holes

Riveted pin.

Part number	Material	Finish	A	B	C	D	F	G	S	Weight (g)
52-1-3861	304 stainless steel	raw	40	40	2	4	8	24	4	35
52-1-3862	304 stainless steel	raw	50	50	2	6	8	34	4.5	61
52-1-3863	304 stainless steel	raw	60	60	2	6	8	40	4.5	83
52-1-3874	316L stainless steel	raw	40	40	2	4	8	24	4	35
52-1-3710	316L stainless steel	raw	50	50	2	6	8	34	4.5	62
52-1-3875	316L stainless steel	raw	60	60	2	6	8	40	4.5	85

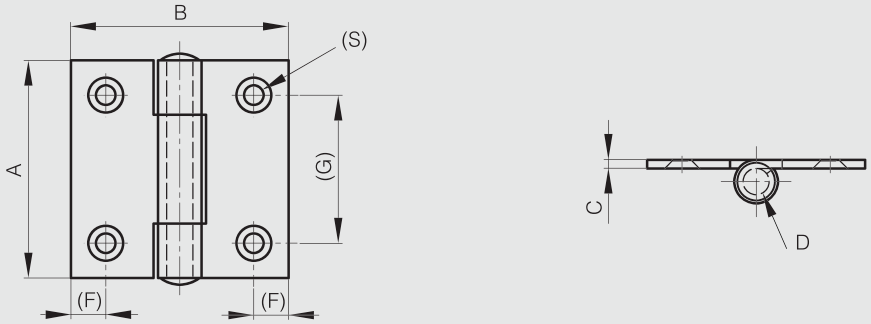

Square hinges with no offset leaf and riveted pin - with 6 holes

NEW

Riveted pin.

	Part number	Material	Finish	A	B	C	D	F	G	H	S	Note	Weight (g)
	52-1-3867	304 stainless steel	raw	70	70	2	6	8	50	10	4.5		110
NS	52-1-4109	304 stainless steel	raw	70	70	2	6	8	50	10	4.5	with M5 studs	128
	52-1-3868	304 stainless steel	raw	80	80	2.5	6	8	60	12.5	4.5		166
NS	52-1-4112	304 stainless steel	raw	80	80	2.5	6	8	60	12.5	4.5	with M5 studs	184

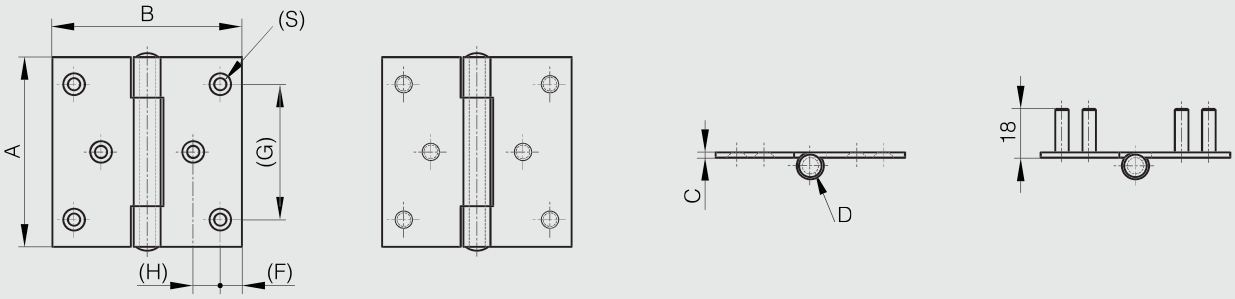

52-1-3867 & 52-1-3868

52-1-4109 & 52-1-4112

Hinge with nylon washers

270° STAINLESS STEEL

Teflon plated pin in 304 stainless steel blocked with 2 punches.
4 nylon washers.
Produced mainly in stainless steel, for a complete description of the materials contact us.

Part number	Material	Finish	A	B	C	D	E	F	G	S	Weight (g)
52-1-3790	304 stainless steel	raw	75	80	2	6	10.5	6	52	7.5	120

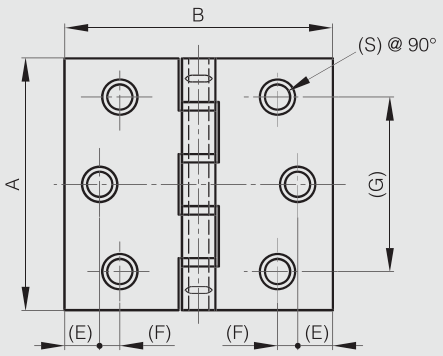

Hinge with oblong holes

270° STEEL RoHS

Part number	Material	Finish	A	B	C	D	S	Weight (g)
50-1-3312	steel	zinc plated	65	70	2	4	6.7	82

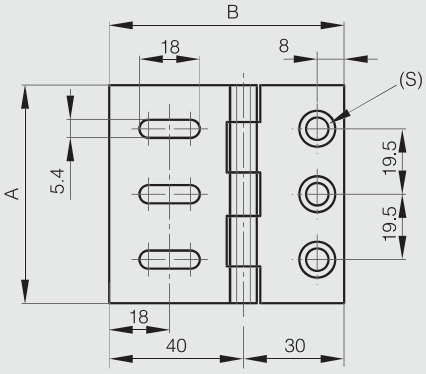

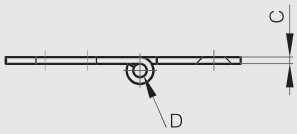

Mini brass-plated steel hinges 15 x 9 mm

NEW

180° STEEL RoHS

Mini brass-plated steel hinges 15x9 mm

Sold in box of 100 units.
Weight per box.

	Part number	Material	Finish	A	B	C	D	S	Pin material	Weight (g)
NEW	50-7-4273	steel	brass-plated	15	9	0.4	1.15	1	steel	90

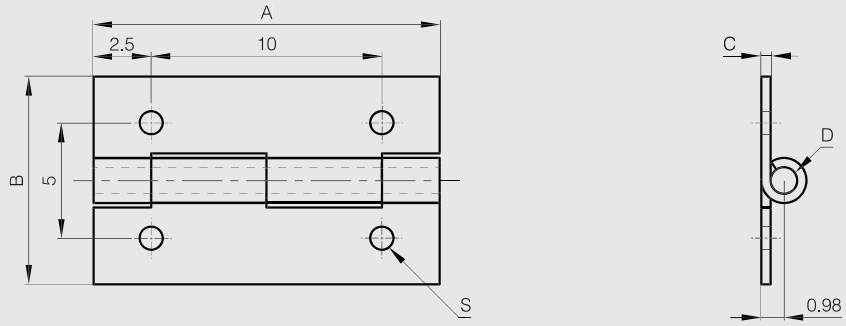

Mini brass-plated steel hinges 16 x 12 mm

NEW

180° STEEL RoHS

Mini brass-plated steel hinges 16x12 mm

Sold in box of 100 units.
Weight per box.

	Part number	Material	Finish	A	B	C	D	S	Pin material	Weight (g)
NEW	50-7-4274	steel	brass-plated	16	12	0.4	1.15	1.5	steel	110

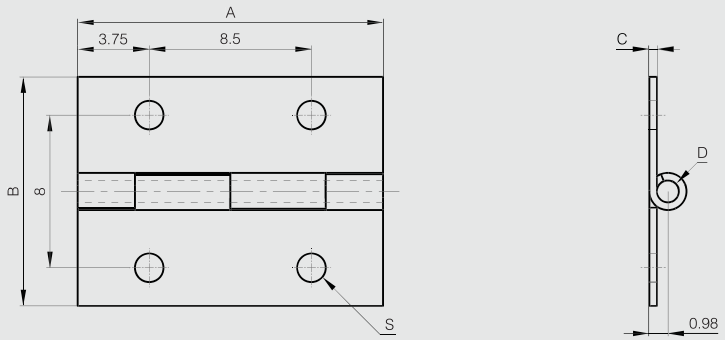

Mini brass-plated steel hinges 20 x 14 mm

NEW

180° STEEL RoHS

Mini brass-plated steel hinges 20x14 mm

Sold in box of 100 units.
Weight per box.

	Part number	Material	Finish	A	B	C	D	S	Pin material	Weight (g)
NEW	50-7-4276	steel	brass-plated	20	14	0.4	1.15	1.75	steel	140

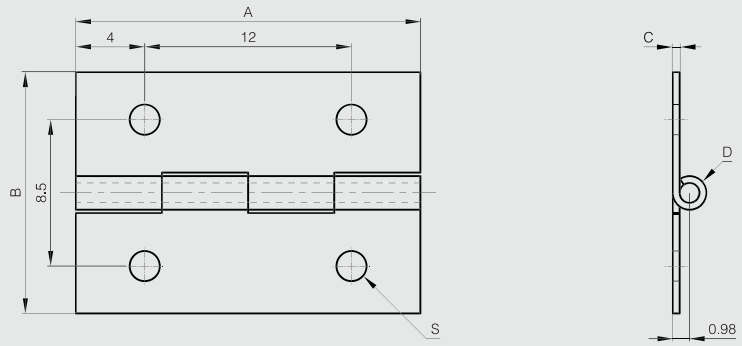

Mini brass-plated steel hinges 25 x 12 mm

NEW

180° STEEL RoHS

Mini brass-plated steel hinges 25x12 mm

Sold in box of 100 units.
Weight per box.

	Part number	Material	Finish	A	B	C	D	S	Pin material	Weight (g)
NEW	50-7-4275	steel	brass-plated	25	12	0.4	1.15	1.25	steel	170

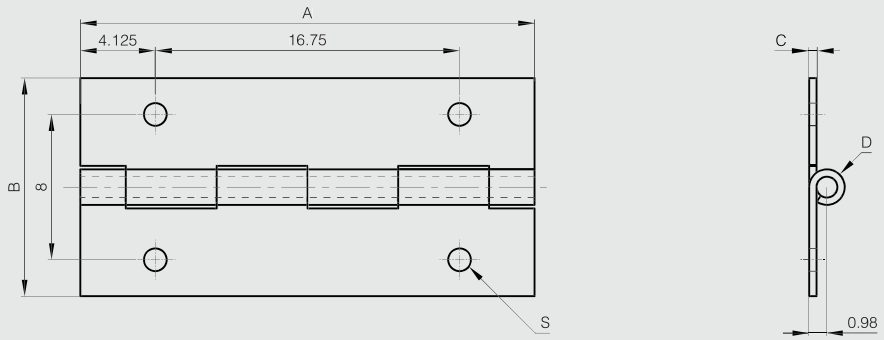

Mini brass-plated steel hinges 25 x 16 mm

Mini brass-plated steel hinges 25x16 mm

Sold in box of 100 units.
Weight per box.

	Part number	Material	Finish	A	B	C	D	S	Pin material	Weight (g)
NEW	50-7-4277	steel	brass-plated	25	16	0.5	1.15	1.75	steel	200

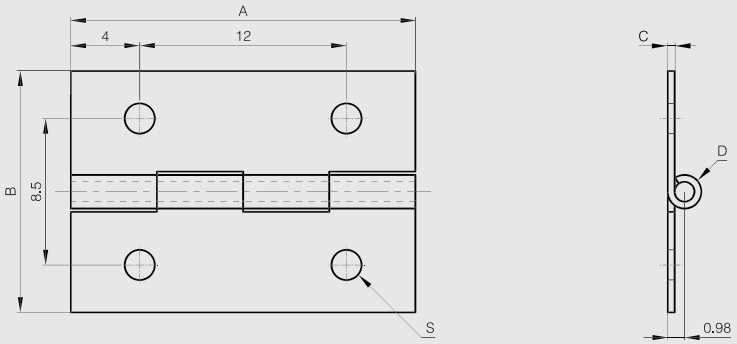

Hinge 50 x 30 mm

Drilled hinge with riveted pin.

Part number	Material	Finish	A	B	C	D	F	G	S	Weight (g)
52-1-3571	304 stainless steel	raw	50	30	1	3	6.5	35	3.5	18

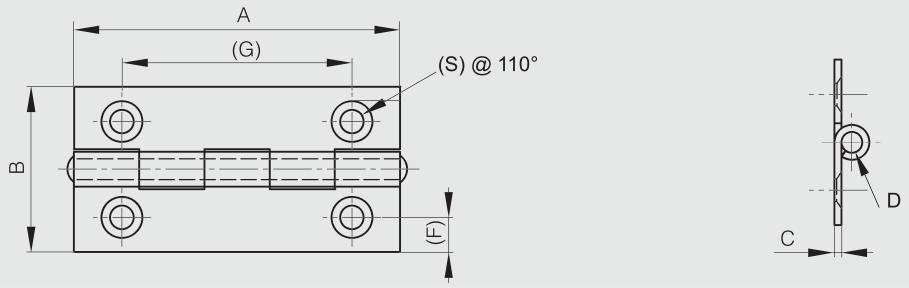

Hinges 50 x 40 mm

Available in 2 versions: with holes or countersunk holes

Part number	Material	Finish	A	B	C	D	F	G	S	Note	Weight (g)
50-1-3525	steel	zinc plated	50	40	1.2	3	8.5	36	5	drilled	26
50-1-3526	steel	zinc plated	50	40	1.2	3	8.5	36	5	countersunk version	24
52-1-3592	304 stainless steel	raw	50	40	1.2	3	8.5	36	5	countersunk version	24
52-1-3607	304 stainless steel	raw	50	40	1.2	3	8.5	36	5	drilled	25

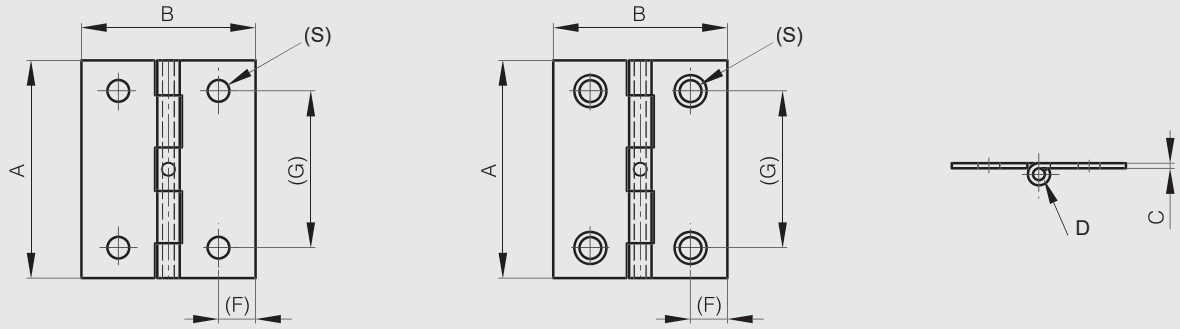

Hinges 60 x 35 mm

270° STAINLESS STEEL RoHS

Part number	Material	Finish	A	B	C	D	S	Note	Weight (g)
52-1-4009	304 stainless steel	raw	60	35	1	2	4	countersunk version	20
52-1-4051	304 stainless steel	raw	60	35	1	2	4	drilled	21

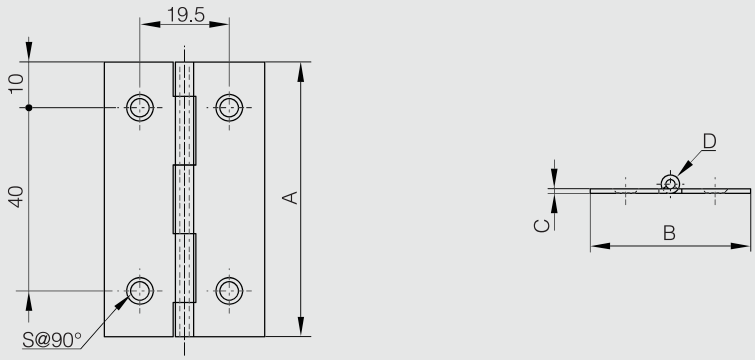

Hinge 62 x 44 mm

270° STEEL RoHS

Part number	Material	Finish	A	B	C	D	Weight (g)
50-1-3309	steel	raw	62	44	2	4.9	53

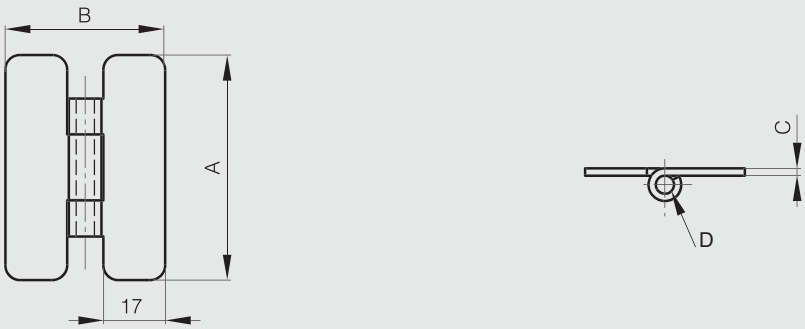

Hinge 75 x 40 mm

270° STAINLESS STEEL RoHS

Part number	Material	Finish	A	B	C	D	E	F	G	Weight (g)
52-1-3990	304 stainless steel	raw	75	40	1.5	3	6	7.5	48	46

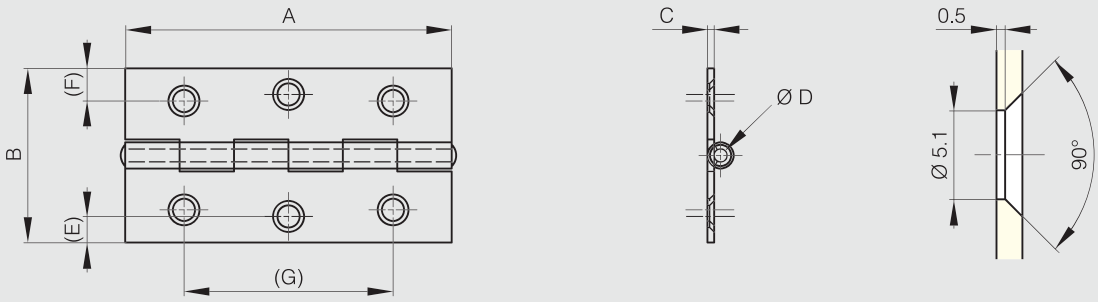

Small hinges 30 to 50 mm long

270° STEEL RoHS

Part number	Material	Finish	A	B	C	D	F	G	S	Note	Weight (g)
50-7-3618	steel	raw	30	19	1	2.4				undrilled / 3 knuckles	6
50-7-3617	steel	raw	30	19	1	2.4	4	19	3.3	drilled / 3 knuckles	6
50-7-3557	steel	raw	35	21.8	0.8	2.4				undrilled / headed pin / 5 knuckles	8
50-7-3549	steel	raw	35	21.8	0.8	2.4	4.2	22	3.5	drilled / headed pin / 5 knuckles	7
50-7-3550	steel	raw	40	25	0.9	2.7	4.5	27	3.2	drilled / headed pin / 5 knuckles	11
50-7-3551	steel	raw	50	29	1	2.4	7	35.2	3.9	drilled / 5 knuckles	16

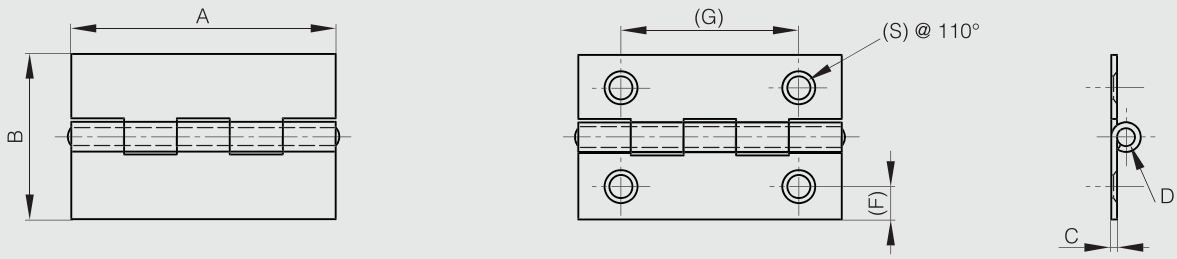

Hinges 60 to 100 mm long

All hinges have headed pins except 50-7-3552, 50-7-3553, 50-7-3554.

	Part number	Material	Finish	A	B	C	D	F	G	S	Note	Weight (g)
	50-7-3560	steel	raw	60	34.8	1	3				undrilled / headed pin / 5 knuckles	23
	50-7-3552	steel	raw	60.5	36.4	1	3.5	8.75	44	3.9	drilled / 6 knuckles	23
	50-7-3553	steel	raw	70	41.5	1	3.5	8.7	52	4.5	drilled / 7 knuckles	39
	50-7-3554	steel	raw	80.5	45.4	1	3.5	9.6	59.3	4.6	drilled / 8 knuckles	47
NEW	50-1-3564	steel	raw	100	50	1.5	5				undrilled / headed pin / 5 knuckles	92
NEW	50-1-3556	steel	raw	100	50	1.5	5	9.7	77	5.5	drilled / headed pin / 5 knuckles	89

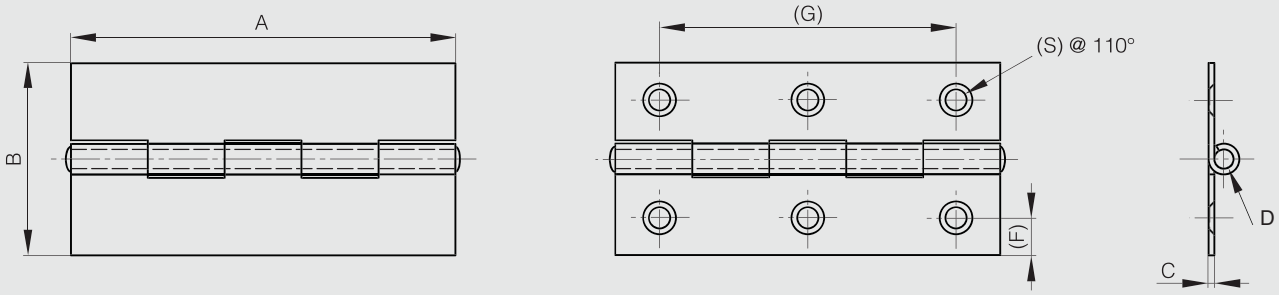

Hinge 100 x 84 mm

304 stainless steel riveted pin.

Part number	Material	Finish	A	B	C	D	S	Weight (g)
50-1-4174	steel	zinc plated	100	84	3	6	5.5	250

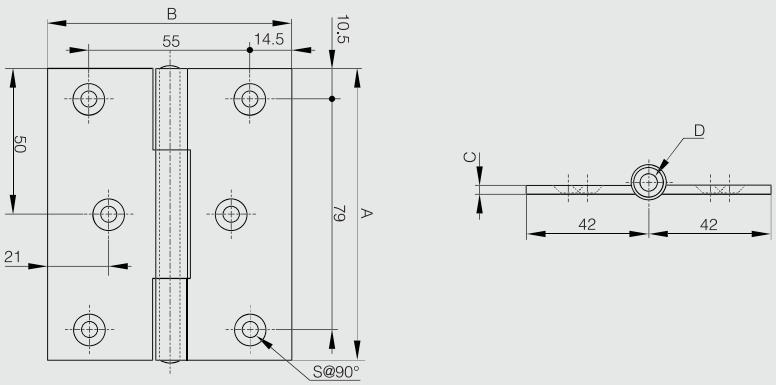

Small FinAlu® hinges

Small hinges in aluminium profile with a small pin diameter.
This nice design can be used in many applications: (medical, electronic enclosures, food equipment, transportation...).
These drilled hinges have same features as FinAlu® continuous hinges.
They have the similar dimensions to hinges used in the aircraft industry.

	Part number	Material	Finish	A	B	C	D	E	F	G	S	Pin material	Weight (g)
NEW	72-1-4298	6082 T5 alu	clear anodised	38	31.75	1.3	2.2	2.29	20	22	4.3	stainless steel	7
NS	72-1-4350	6082 T5 alu	blue anodised	38	31.75	1.3	2.2	2.29	20	22	4.3	stainless steel	5
NS	72-1-4351	6082 T5 alu	red anodised	38	31.75	1.3	2.2	2.29	20	22	4.3	stainless steel	5
NS	72-1-4352	6082 T5 alu	bronze anodised	38	31.75	1.3	2.2	2.29	20	22	4.3	stainless steel	5
NS	72-1-4353	6082 T5 alu	gold anodised	38	31.75	1.3	2.2	2.29	20	22	4.3	stainless steel	5
NEW	72-1-4420	6082 T5 alu	clear anodised	40	38.1	1.3	2.2	2.29	24	24	4.3	stainless steel	10
NEW	72-1-4299	6082 T5 alu	clear anodised	50	44.45	1.3	2.2	2.29	30	34	4.3	stainless steel	10
NS	72-1-4354	6082 T5 alu	blue anodised	50	44.45	1.3	2.2	2.29	30	34	4.3	stainless steel	9
NS	72-1-4355	6082 T5 alu	red anodised	50	44.45	1.3	2.2	2.29	30	34	4.3	stainless steel	9
NS	72-1-4356	6082 T5 alu	bronze anodised	50	44.45	1.3	2.2	2.29	30	34	4.3	stainless steel	9
NS	72-1-4357	6082 T5 alu	gold anodised	50	44.45	1.3	2.2	2.29	30	34	4.3	stainless steel	9
NEW	72-1-4300	6082 T5 alu	clear anodised	63.5	63.5	1.3	2.2	2.29	40	40	6	stainless steel	18
NS	72-1-4358	6082 T5 alu	blue anodised	63.5	63.5	1.3	2.2	2.29	40	40	6	stainless steel	15
NS	72-1-4359	6082 T5 alu	red anodised	63.5	63.5	1.3	2.2	2.29	40	40	6	stainless steel	15
NS	72-1-4360	6082 T5 alu	bronze anodised	63.5	63.5	1.3	2.2	2.29	40	40	6	stainless steel	15
NS	72-1-4361	6082 T5 alu	gold anodised	63.5	63.5	1.3	2.2	2.29	40	40	6	stainless steel	15

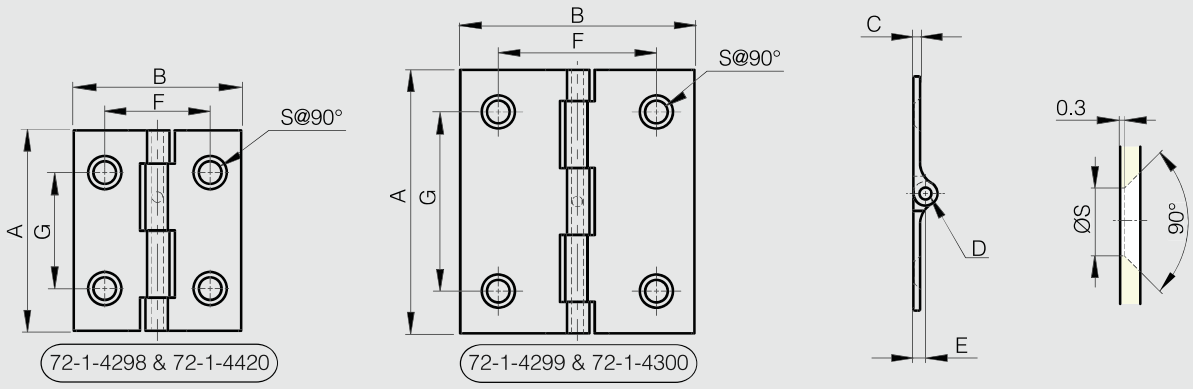

Aluminium profile hinges 30 x 35 mm

NEW

270° ALU RoHS

Free-swinging hinge.
It has the same footprint and design as our friction, detent and spring hinges.
All are fully interchangeable.
Plastic pin.

	Part number	Material	Finish	A	B	C	D	Weight (g)
NEW	72-1-4301	6060 T5 alu	clear anodised	30	35	3.3	8	10
NEW	72-1-4302	6060 T5 alu	black anodised	30	35	3.3	8	10

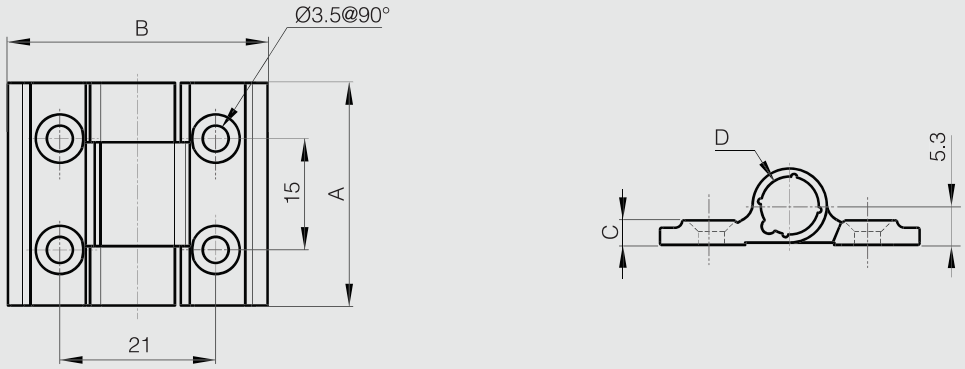

Aluminium profile hinges 60 x 35 mm

NEW

270° ALU RoHS

	Part number	Material	Finish	A	B	C	D	Weight (g)
NEW	72-1-4396	6060 T5 alu	clear anodised	60	35	3.3	8	18
NEW	72-1-4397	6060 T5 alu	black anodised	60	35	3.3	8	18

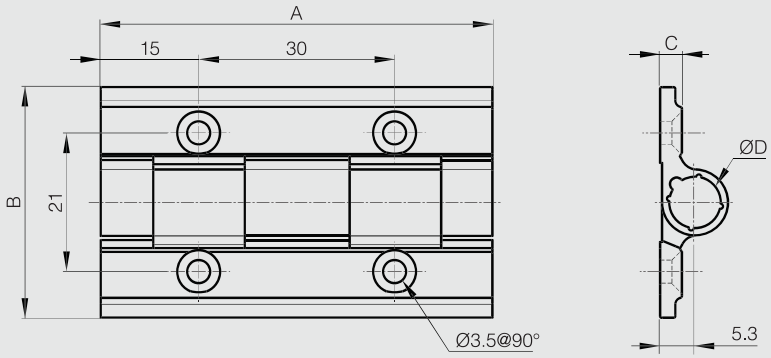

Aluminium profile hinges 90 x 35 mm

NEW

270° ALU RoHS

	Part number	Material	Finish	A	B	C	D	Weight (g)
NEW	72-1-4398	6060 T5 alu	clear anodised	90	35	3.3	8	29
NEW	72-1-4399	6060 T5 alu	black anodised	90	35	3.3	8	29

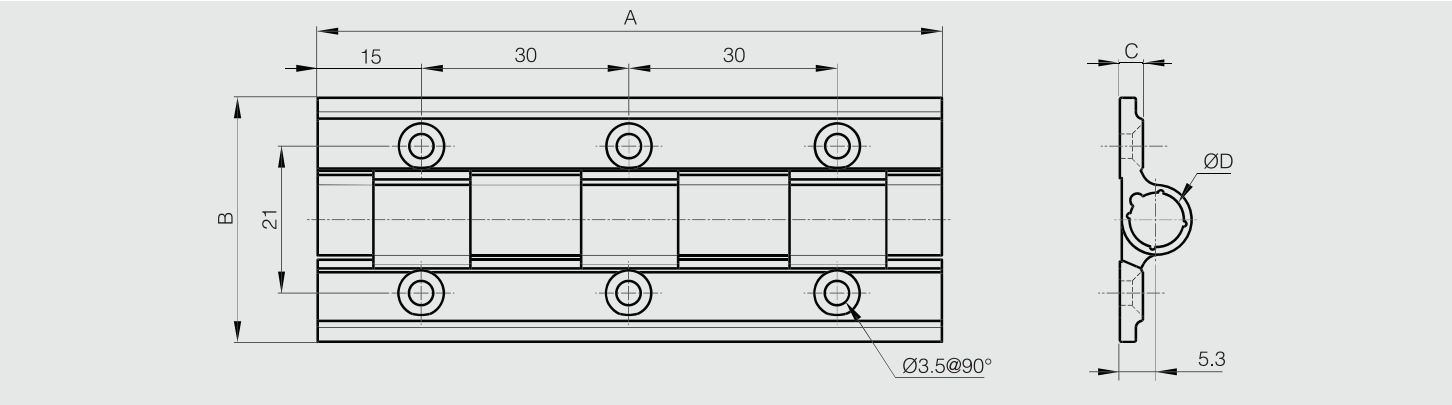

Aluminium profile hinges 120 x 35 mm

NEW

270° ALU RoHS

	Part number	Material	Finish	A	B	C	D	Weight (g)
NEW	72-1-4400	6060 T5 alu	clear anodised	120	35	3.3	8	38
NEW	72-1-4401	6060 T5 alu	black anodised	120	35	3.3	8	38

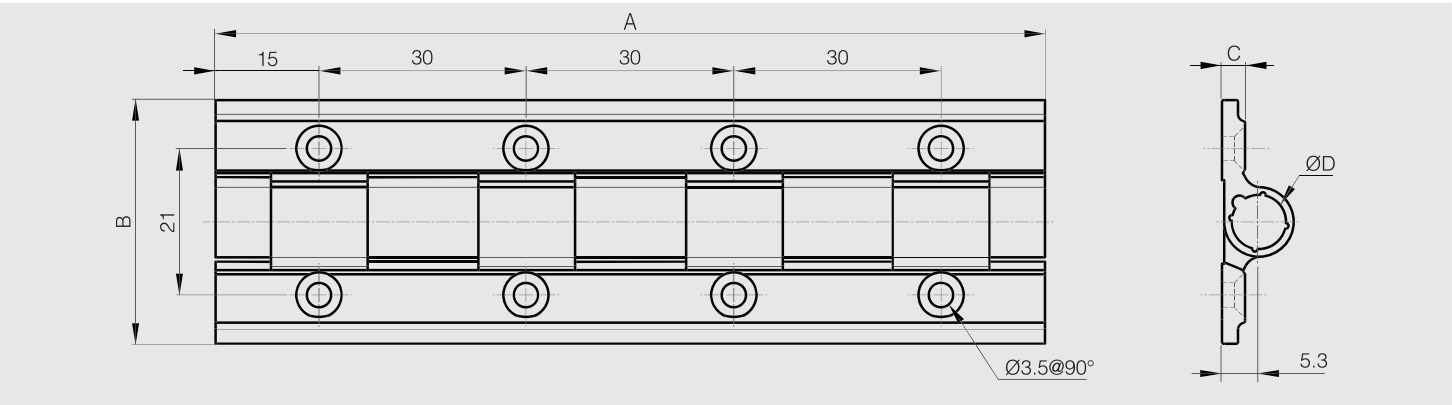

Aluminium profile hinges - diameter 13

180° ALU RoHS

This hinge has the same footprint and design as our friction, detent and spring hinges.
All are fully interchangeable.
Plastic pin with or without end caps.

Part number	Material	Finish	A	B	C	D	Note	Weight (g)
72-1-4212	6060 T5 alu	clear anodised	65	55	4.5	13	without cap	130
72-1-4213	6060 T5 alu	black anodised	65	55	4.5	13	without cap	130
72-1-4214	6060 T5 alu	clear anodised	65	55	4.5	13	with cap	130
72-1-4215	6060 T5 alu	black anodised	65	55	4.5	13	with cap	130

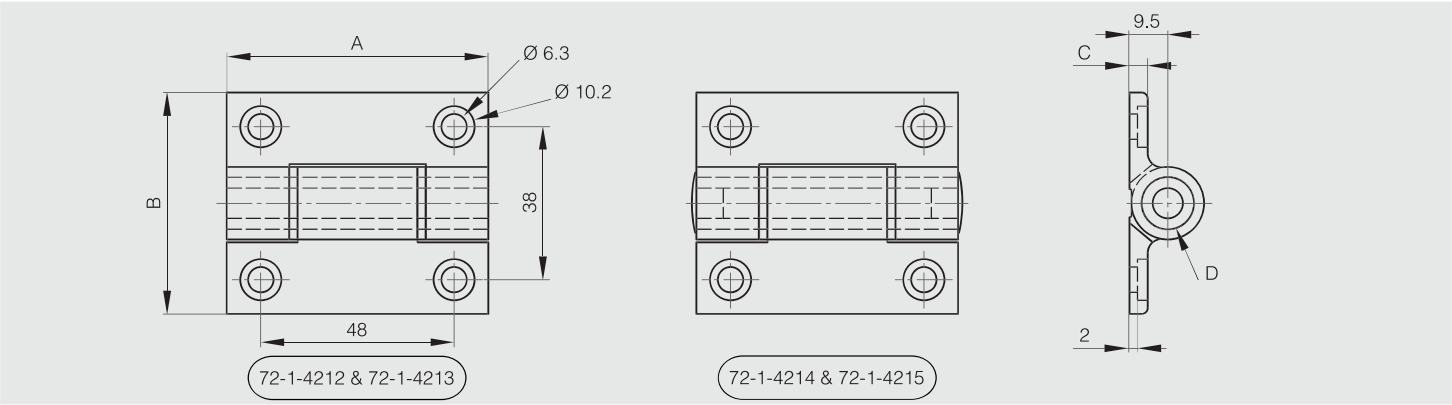

Heavy duty aluminium profile hinges

270° ALU RoHS

Free swinging hinge.
It has the same footprint and design as the spring hinge for heavy duty applications (part numbers: 72-1-4231, 72-1-4232, 72-1-4258 and 72-1-4259).
All are fully interchangeable.

Part number	Material	Finish	A	B	C	D	Weight (g)
72-1-4241	6082 T5 alu	clear anodised	100	82.5	5.5	24	149
72-1-4242	6082 T5 alu	black anodised	100	82.5	5.5	24	150

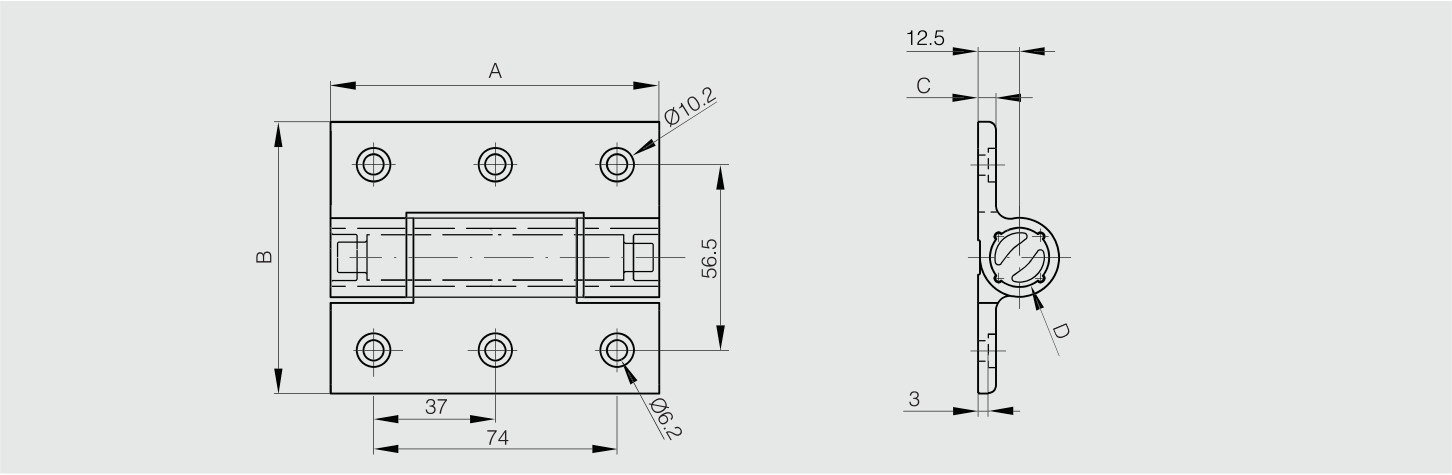

Aluminium hinges - 50 mm width

Hinge with 304 stainless steel riveted pin.

Part number	Material	Finish	A	B	C	D	Weight (g)
72-1-3635	6060 T5 alu	raw	32	50	3	5.2	20
72-1-3636	6060 T5 alu	raw	50	50	3	5.2	30

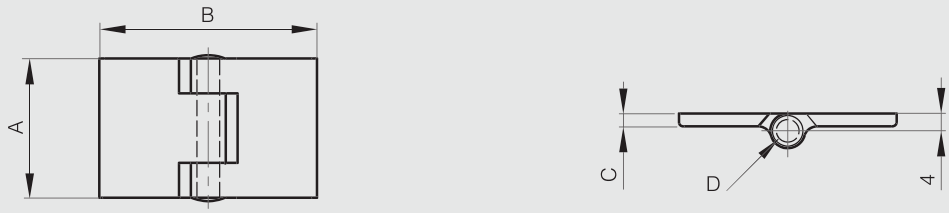

Aluminium hinges with reversed leaves - 50 mm width

Hinge with 304 stainless steel riveted pin.

Part number	Material	Finish	A	B	C	D	Weight (g)
72-1-3637	6060 T5 alu	raw	32	50	3	5.2	20
72-1-3638	6060 T5 alu	raw	50	50	3	5.2	30

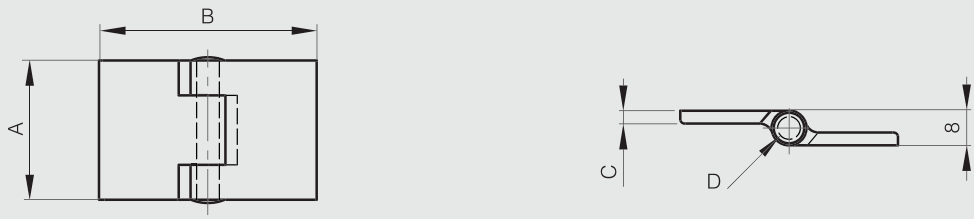

Clean room lift-off hinges 65 x 60 mm

270° ALU RoHS

No metal-to-metal contact. Polyacetal bushings minimize particles.
Door size: max. W600 x L800.
Door weight: max. 8 kg/pair.
303 stainless steel pin.

Part number	Material	Finish	A	B	C	D	G	S	Note	Weight (g)
14-7-3877	aluminium	anodised	65	60	3.5	5	40	5.5	type 1	49
14-7-3878	aluminium	anodised	65	60	3.5	5	40	5.5	type 2	49

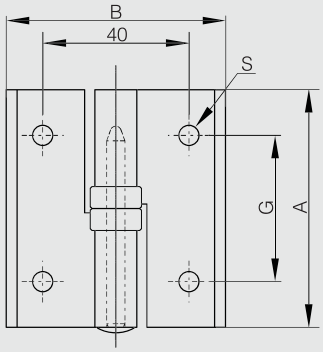

14-7-3877

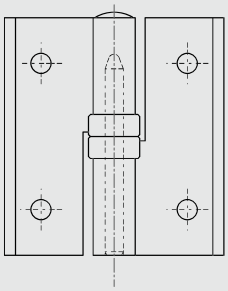

14-7-3878

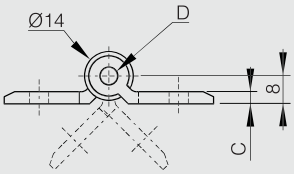

Aluminium lift-off hinges 80 x 80 mm

270° ALU RoHS

Zinc plated steel pin.
Nylon bushing.

Part number	Material	Finish	A	B	C	D	S	Note	Weight (g)
14-7-3624	aluminium	anodised silver	80	80	3.5	8	5.5	type 1	85
14-7-3625	aluminium	anodised silver	80	80	3.5	8	5.5	type 2	85

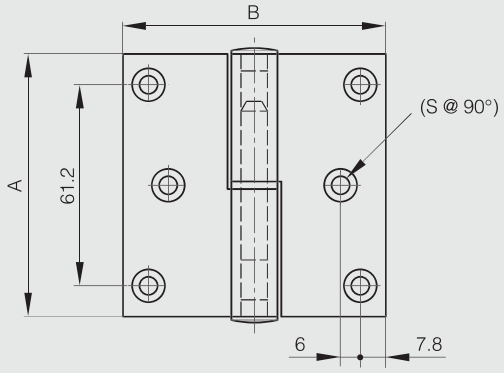

14-7-3624

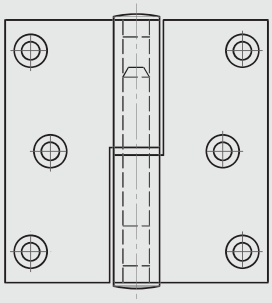

14-7-3625

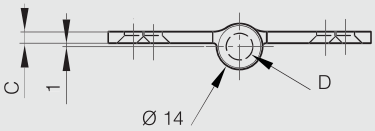

Aluminium lift-off hinges 100 x 100 mm

270° ALU RoHS

Zinc plated steel pin.
Nylon bushing.

Part number	Material	Finish	A	B	C	D	S	Note	Weight (g)
14-7-3628	aluminium	anodised silver	100	100	4	9	6	type 1	106
14-7-3629	aluminium	anodised silver	100	100	4	9	6	type 2	106

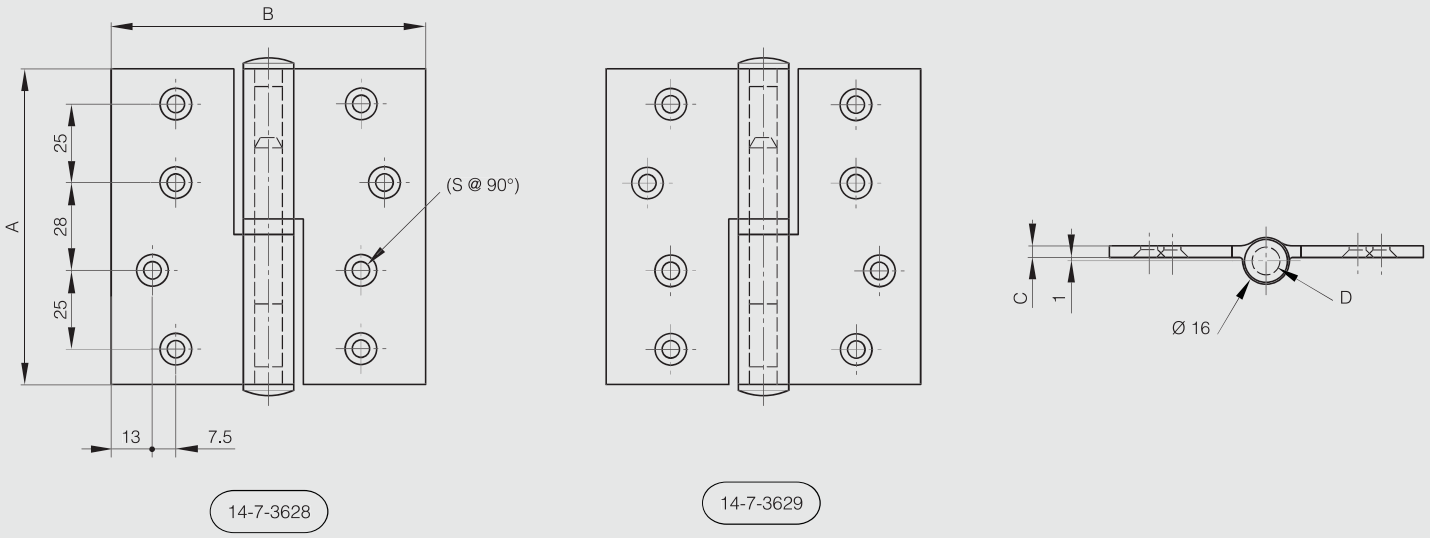

Brass hinge - 4 holes

270° BRASS RoHS

304 stainless steel pin.

Part number	Material	Finish	A	B	C	D	E	F	G	S	Note	Weight (g)
72-7-3659	brass	raw	30	20	2	3	2.5	12.5	17	2.7	drilled	12

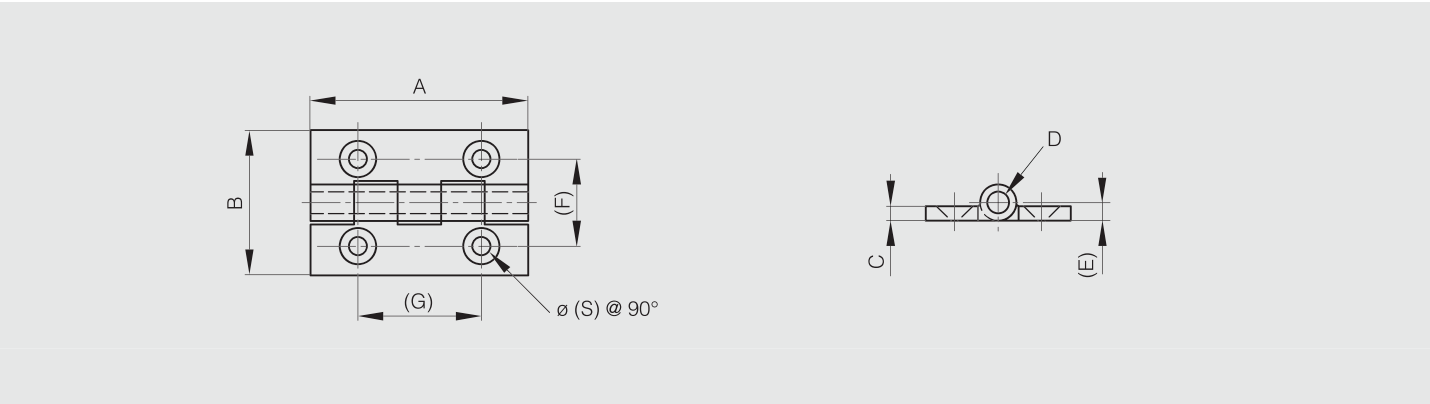

Brass hinges - 6 holes A

304 stainless steel pin.

Part number	Material	Finish	A	B	C	D	E	F	G	S	Weight (g)
72-7-3663	brass	raw	40	35	2	3	2.5	21	14	3	25
72-7-3664	brass	raw	40	40	2	3	2.5	23	14	3	29
72-7-3665	brass	raw	50	30	2	3	2.5	17.5	17.5	3	27

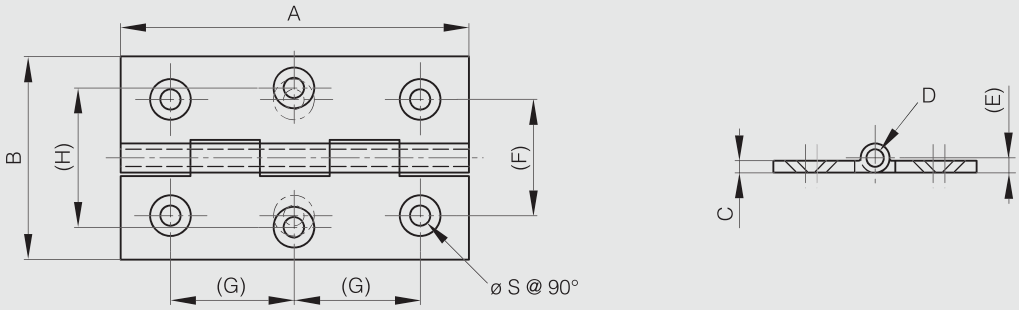

Brass hinges - 6 holes B

304 stainless steel pin.

Part number	Material	Finish	A	B	C	D	E	F	G	H	S	Weight (g)
72-7-3668	brass	raw	70	40	2	3	2.25	23	24	27	3.5	52
72-7-3671	brass	raw	80	60	3	4	3.5	28	28.5	45	4	130

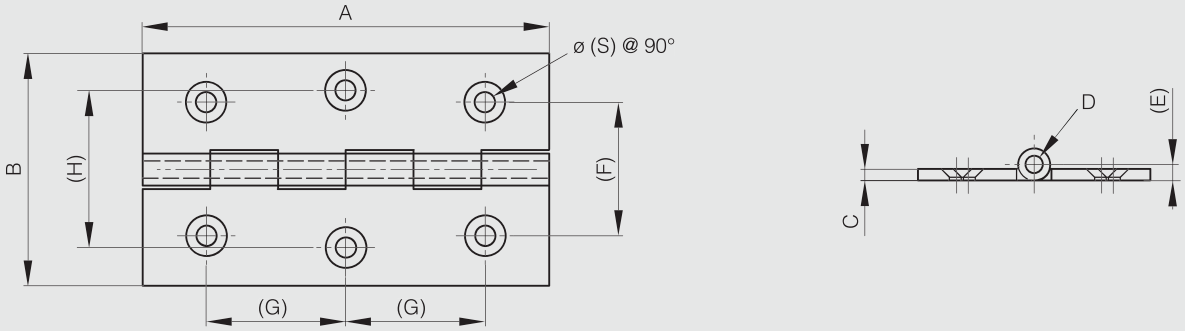

Lift-off hinges 30 mm long

Part number	Material	Finish	A	B	C	D	F	G	S	Note	Weight (g)
14-7-3390	steel	nickel plated	30	40	1.2	4	7.7	15	3	type 1	16
14-7-3391	steel	nickel plated	30	40	1.2	4	7.7	15	3	type 2	16

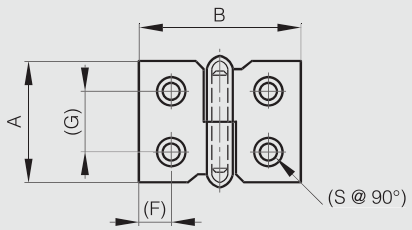

14-7-3390

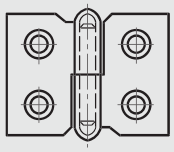

14-7-3391

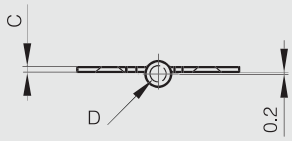

Lift-off hinges 40 mm long

Part number	Material	Finish	A	B	C	D	E	F	G	S	Note	Weight (g)
14-7-3392	steel	nickel plated	40	50	1.5	4	7.5	13	24	3	type 1	28
14-7-3393	steel	nickel plated	40	50	1.5	4	7.5	13	24	3	type 2	28

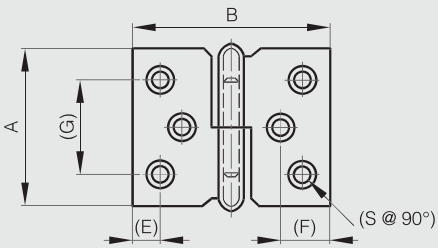

14-7-3392

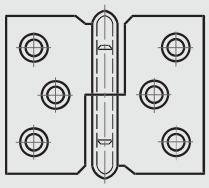

14-7-3393

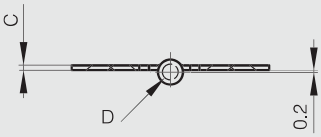

Lift-off hinges 50 x 30 mm

270° STEEL RoHS

Part number	Material	Finish	A	B	C	D	F	G	S	Note	Weight (g)
14-7-3394	steel	nickel plated	50	30	1.3	4	6	34	3.6	type 1 / drilled	20
14-7-3395	steel	nickel plated	50	30	1.3	4	6	34	3.6	type 2 / drilled	20

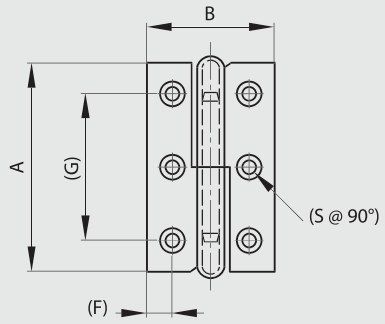

14-7-3394

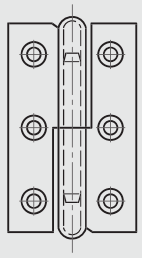

14-7-3395

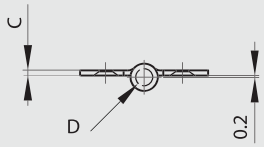

Lift-off hinges 60 to 80 mm long

270° STEEL RoHS

Part number	Material	Finish	A	B	C	D	E	F	G	S	Note	Weight (g)
14-7-3396	steel	nickel plated	60	40	1.5	4	5.5	7	46	4	type 1	35
14-7-3397	steel	nickel plated	60	40	1.5	4	5.5	7	46	4	type 2	35
14-7-3398	steel	nickel plated	68	45	1.5	4.5	6	8	54	4.5	type 1	46
14-7-3399	steel	nickel plated	68	45	1.5	4.5	6	8	54	4.5	type 2	46
14-7-3400	steel	nickel plated	80	50	1.5	5	7.2	9.2	62	4	type 1	59
14-7-3401	steel	nickel plated	80	50	1.5	5	7.2	9.2	62	4	type 2	59

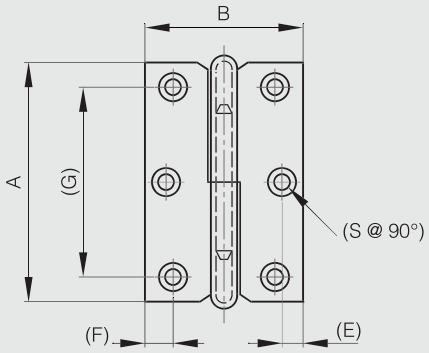

14-7-3396 & 14-7-3398 & 14-7-3400

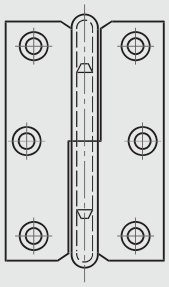

14-7-3397 & 14-7-3399 & 14-7-3401

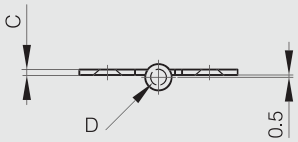

Lift-off hinges 80 x 60 mm - stainless steel

Pin and washer in stainless steel.

Part number	Material	Finish	A	B	C	D	S	Note	Weight (g)
14-1-3872	304 stainless steel	raw	80	60	2	6	6.3	type 1	115
14-1-3873	304 stainless steel	raw	80	60	2	6	6.3	type 2	115

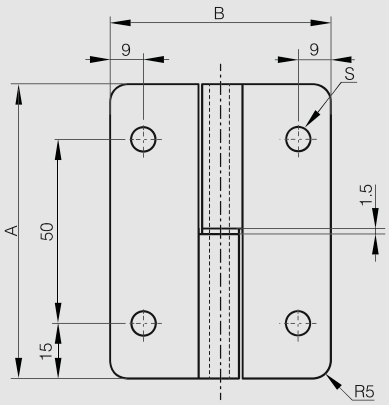

14-1-3872

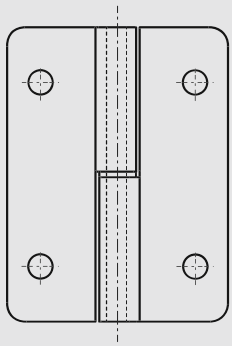

14-1-3873

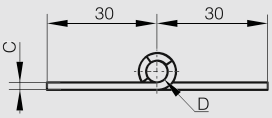

Lift-off hinges 80 x 80 mm - stainless steel with 6 holes

Only the visible side has a brushed finish.
Produced mainly in stainless steel, for a complete description of the materials contact us.

Part number	Material	Finish	A	B	C	D	S	Note	Weight (g)
14-7-3727	304 stainless steel	brushed	80	80	2.5	7	5.8	type 1 / square corners	175
14-7-3728	304 stainless steel	brushed	80	80	2.5	7	5.8	type 2 / square corners	175

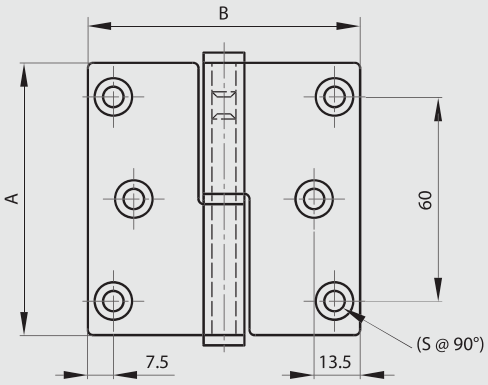

14-7-3727

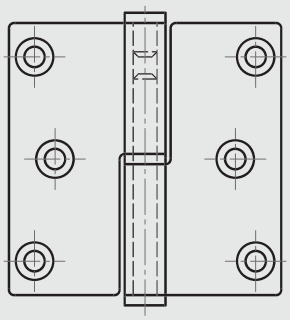

14-7-3728

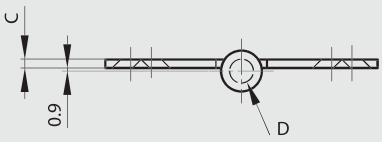

Lift-off hinges 100 x 82 mm - stainless steel with 8 holes

Only the visible side has a brushed finish.
Produced mainly in stainless steel, for a complete description of the materials contact us.

Part number	Material	Finish	A	B	C	D	S	Note	Weight (g)
14-7-3675	304 stainless steel	brushed	100	82	2.5	7	6	type 1 / square corners	220
14-7-3679	304 stainless steel	brushed	100	82	2.5	7	6	type 2 / square corners	220

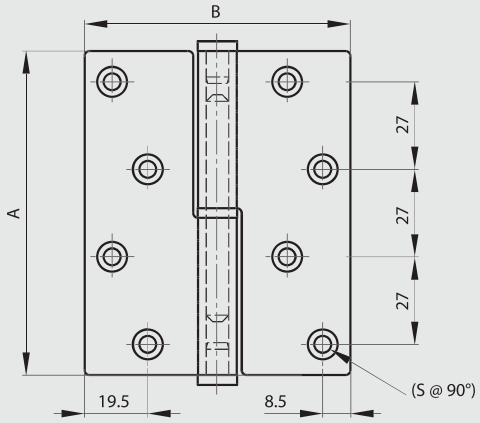

14-7-3675

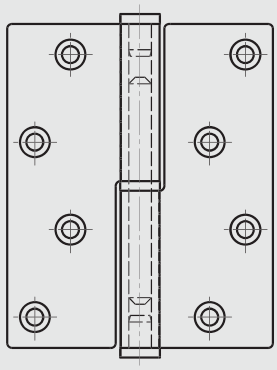

14-7-3679

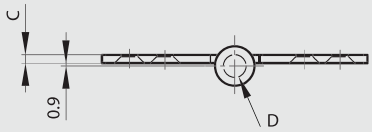

Hinge for marine applications - 36.5 x 38 mm

Riveted pin.

Part number	Material	Finish	A	B	C	D	S	Weight (g)
52-1-3945	316 stainless steel	polished	36.5	38	2	5	6	32

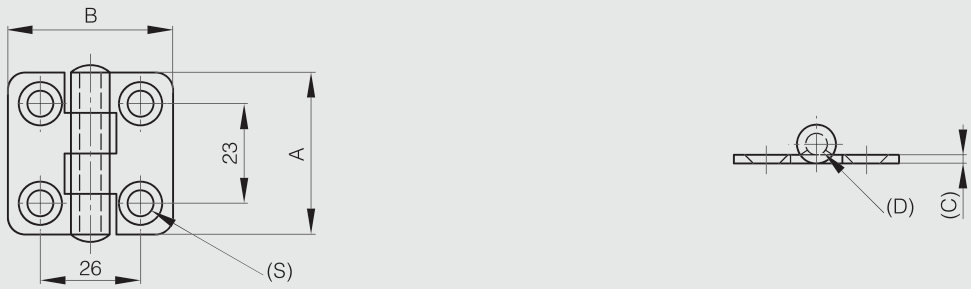

Hinge for marine applications - 36.5 x 56.5 mm

Riveted pin.

Part number	Material	Finish	A	B	C	D	S	Weight (g)
52-1-3947	316 stainless steel	polished	36.5	56.5	2	5	6	40

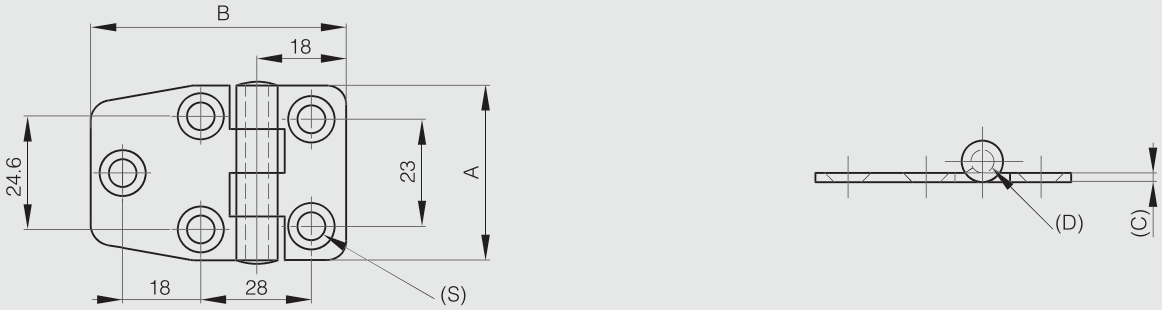

Hinge for marine applications - 36.5 x 76 mm

Riveted pin.

Part number	Material	Finish	A	B	C	D	S	Weight (g)
52-1-3944	316 stainless steel	polished	36.5	76	2	4	6	50

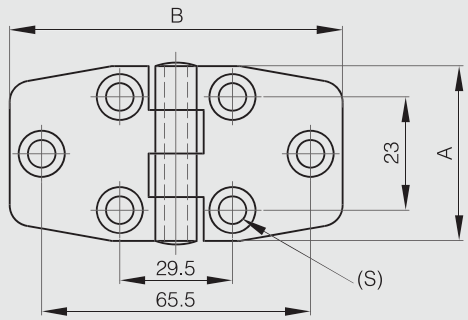

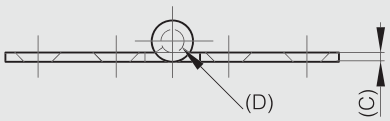

Hinges for marine applications - 36.5 x 65.5 mm

Riveted pin.

Part number	Material	Finish	A	B	C	D	E	S	Weight (g)
52-1-3950	316 stainless steel	polished	36.5	65.5	2	5	10	6	54
52-1-3949	316 stainless steel	polished	36.5	65.5	2	5	15.9	6	54
52-1-3948	316 stainless steel	polished	36.5	65.5	2	5	19.2	6	54

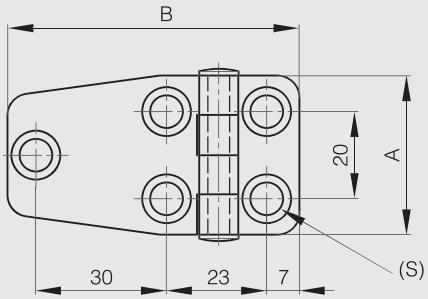

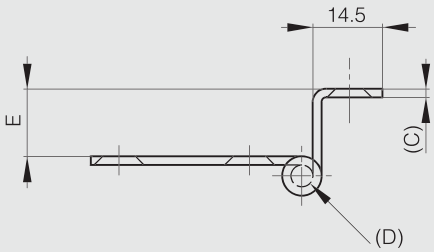

Hinge for marine applications - 38.1 x 71.1 mm

Part number	Material	Finish	A	B	C	D	S	Weight (g)
52-1-3898	316 stainless steel	polished	38.1	71.1	2	3	6	42

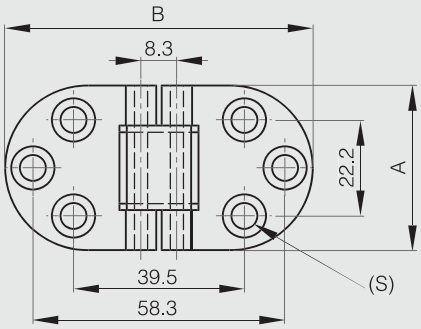

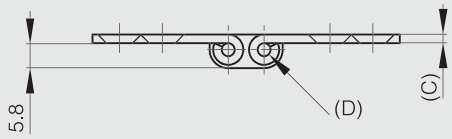

Hinge for marine applications - 52 x 70 mm

Riveted pin.

Part number	Material	Finish	A	B	C	D	S	Weight (g)
52-1-3964	316 stainless steel	brushed	52	70	1.2	4	5.2	45

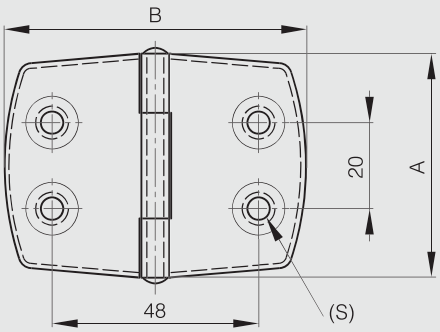

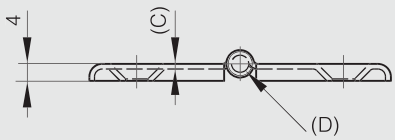

Hinge for marine applications - 30 x 101 mm

Riveted pin.

Part number	Material	Finish	A	B	C	D	S	Weight (g)
52-1-3954	316 stainless steel	polished	30	101	2	5	6	48

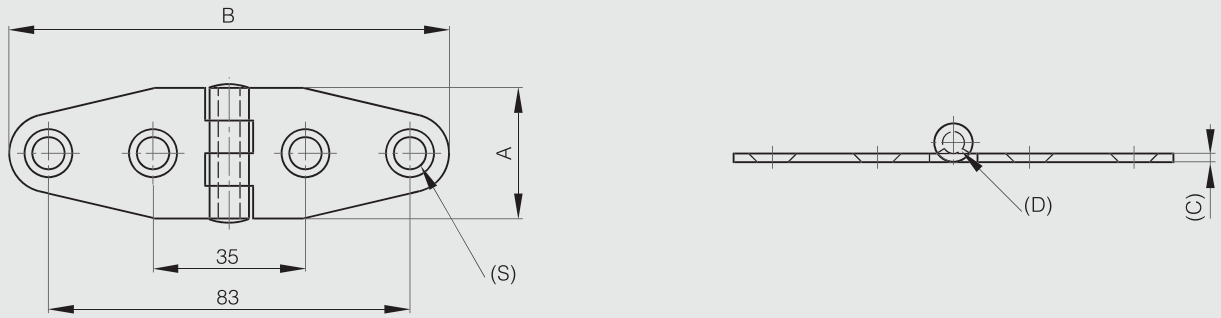

Hinge for marine applications - 38 x 178 mm

Riveted pin.

Part number	Material	Finish	A	B	C	D	S	Weight (g)
52-1-3957	316 stainless steel	polished	38	178	2	5	6	96

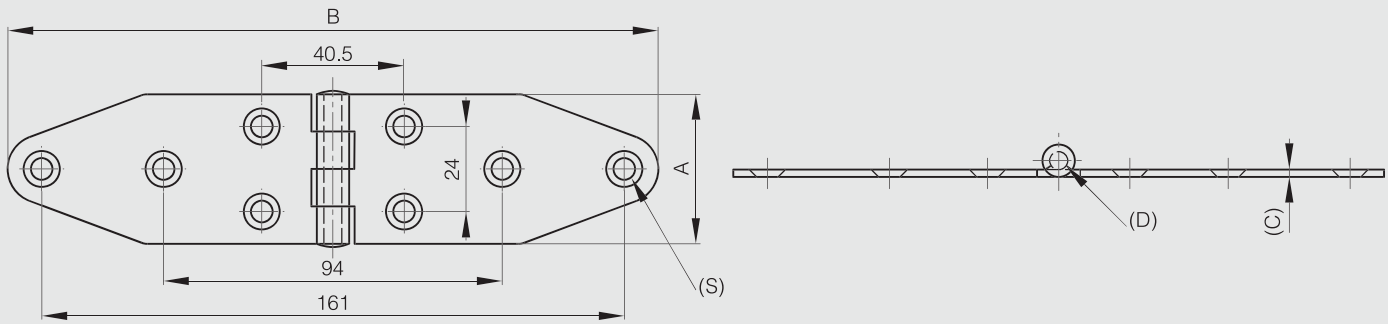

Hinge for marine applications - 40.1 x 137.3 mm

Riveted pin.

Part number	Material	Finish	A	B	C	D	S	Weight (g)
52-1-3953	316 stainless steel	polished	40.1	137.3	2	5	6	80

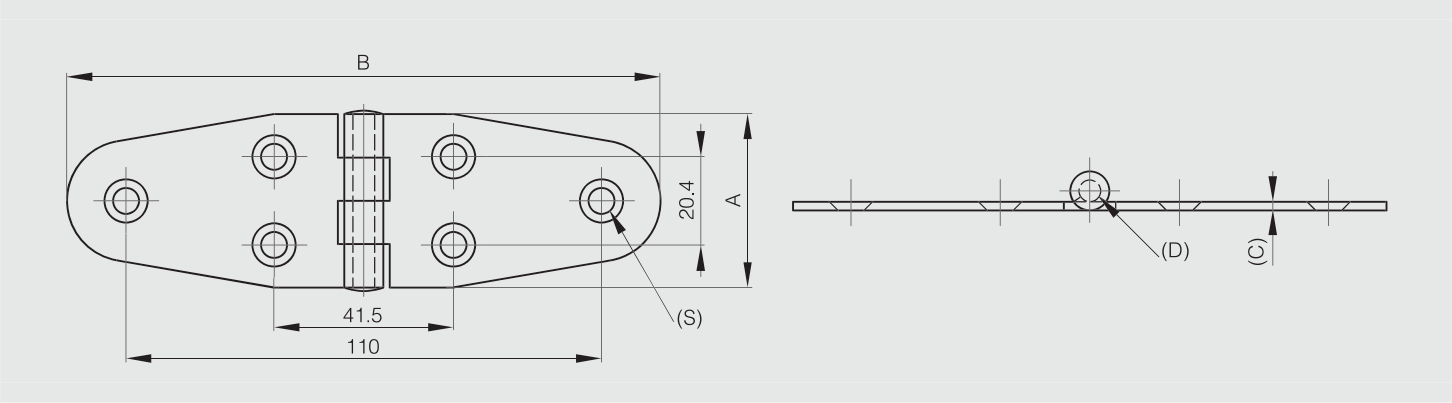

Brass hinge - 30 x 98.5 mm

304 stainless steel pin.
Same shape available for hasp 72-7-3726.

Part number	Material	Finish	A	B	C	D	S	Weight (g)
72-7-3725	brass	chrome plated	30	98.5	3	4	4	57

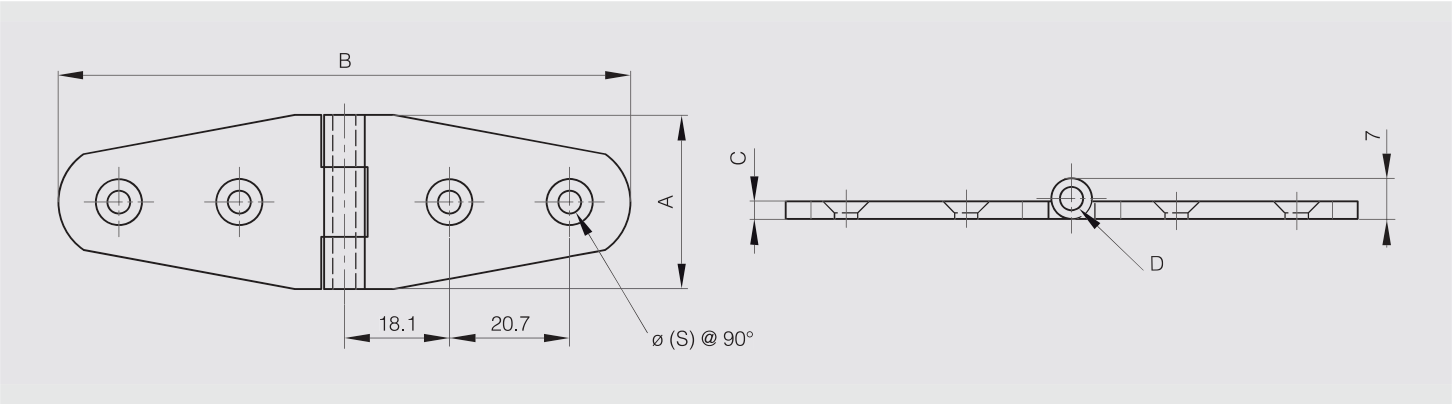

Brass hinge - 30 x 76 mm

304 stainless steel pin.

Part number	Material	Finish	A	B	C	D	S	Weight (g)
72-7-3723	brass	chrome plated	30	76	3	4	4	55

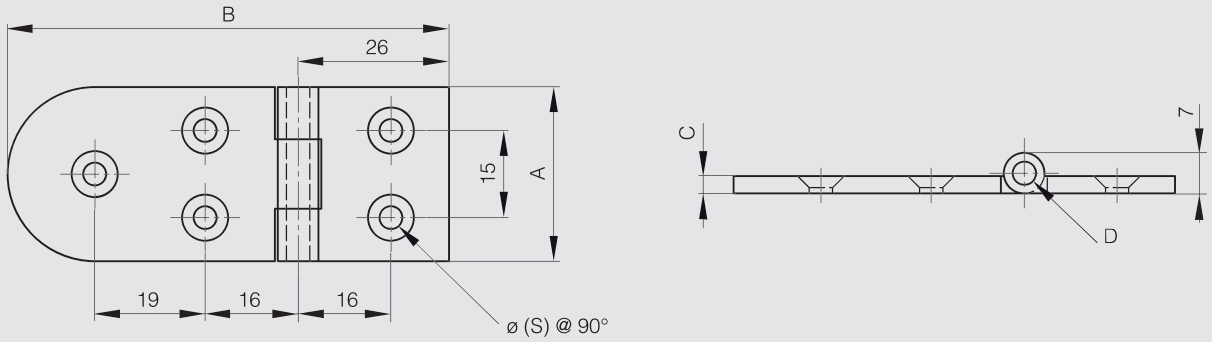

Small butt hinge with one cranked leaf 38 mm

304 stainless steel headed pin.

270° BRASS RoHS

Part number	Material	Finish	A	B	C	D	E	S	Weight (g)
63-1-3301	brass	chrome plated	38	16.5	1.5	3	16.5	4	30

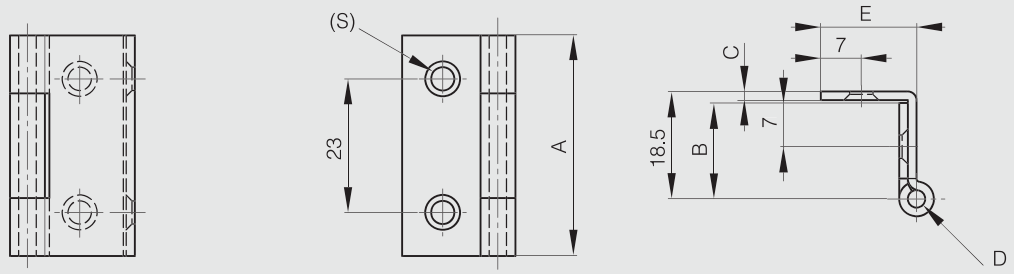

Small butt hinges with one cranked leaf and removable pin 38 mm

Removable pin.

270° STEEL RoHS

Part number	Material	Finish	A	B	C	D	E	F	G	H	J	K	S	Pin material	Weight (g)
60-1-3331	steel	chrome plated	38	19	1.5	3	17	8	23	26	7	3.5	4	nickel plated steel	31
60-1-3332	steel	chrome plated	38	19	1.5	3	19	10	24.5	18	7.5	4	4.7	nickel plated steel	31
60-1-3342	steel	black cataphoresis	38	19	1.5	3	21	10	22.5	18	7.5	4	4.7	raw steel	31

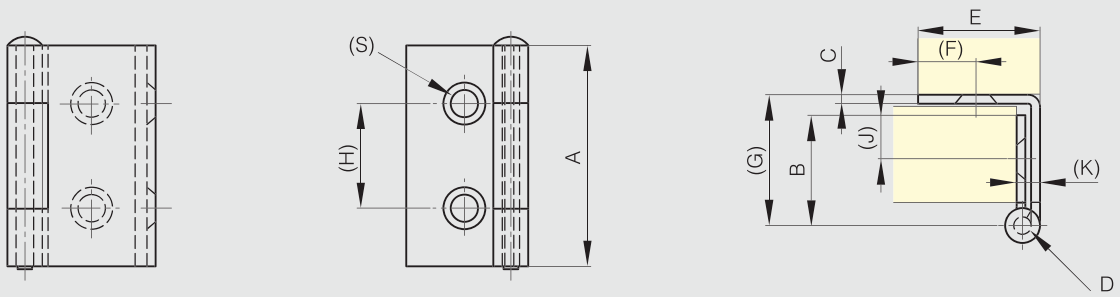

Small butt hinge with one cranked leaf 50 mm

180° STAINLESS STEEL RoHS

304 stainless steel pin.
For door thickness max. 11 mm.

Part number	Material	Finish	A	B	C	D	E	S	Weight (g)
62-1-3300	430 stainless steel	polished	50	28.5	1	3	12	4	20

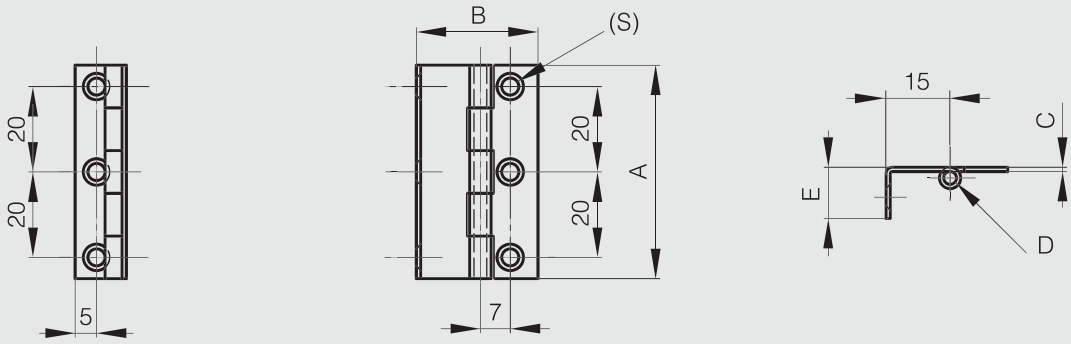

Small butt hinge with one cranked leaf and removable pin 50 mm

270° STAINLESS STEEL RoHS

Removable pin.
Door thickness: max. 20 mm.

Part number	Material	Finish	A	B	C	D	E	S	Weight (g)
62-1-3301	430 stainless steel	polished	50	44.8	1.2	3	19	4.8	33

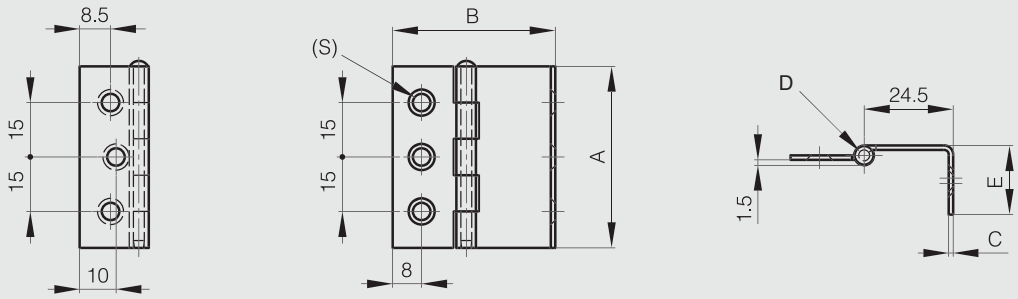

Small butt hinge with two cranked leaves and removable pin 38 x 18.5 mm

304 stainless steel removable pin.

Part number	Material	Finish	A	B	C	D	E	S	Weight (g)
63-1-3300	brass	chrome plated	38	15	1.5	3	14	4	36

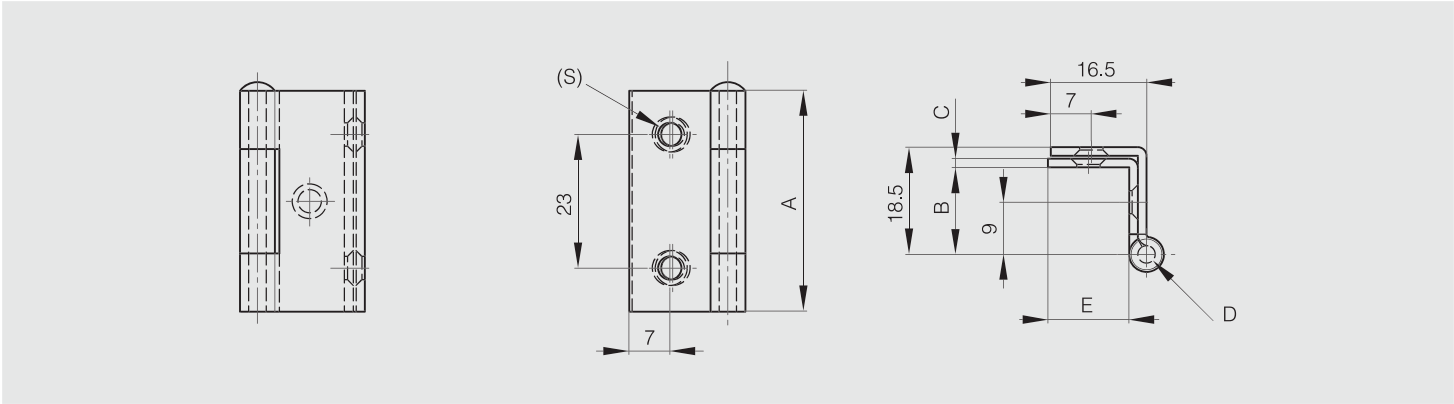

Small butt hinge with two cranked leaves and removable pin 38 x 44.8 mm

Removable pin in nickel plated steel.

Part number	Material	Finish	A	B	C	D	E	S	Weight (g)
60-1-3523	steel	chrome plated	38	22.6	1.5	3	19	5.4	52

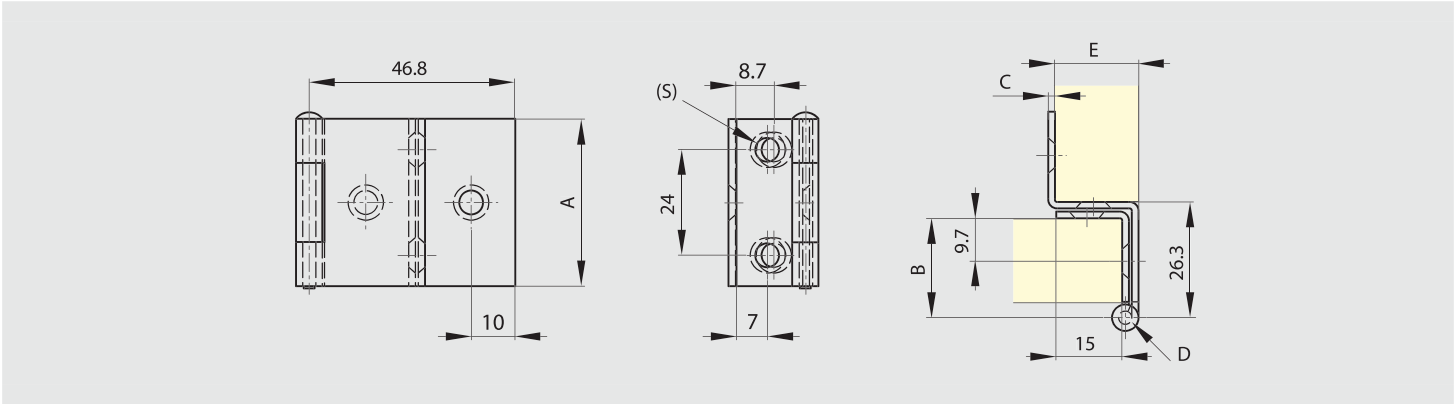

Small butt hinges with two cranked leaves and removable pin 55 x 38 mm

Removable pin.

Part number	Material	Finish	A	B	C	D	E	F	S	Pin material	Weight (g)
60-1-3323	steel	chrome plated	55	14.5	1.5	3	13.5	25	4	nickel plated steel	56
60-1-3325	steel	brass	55	14.5	1.5	3	13.5	25	4	brass plated steel	56

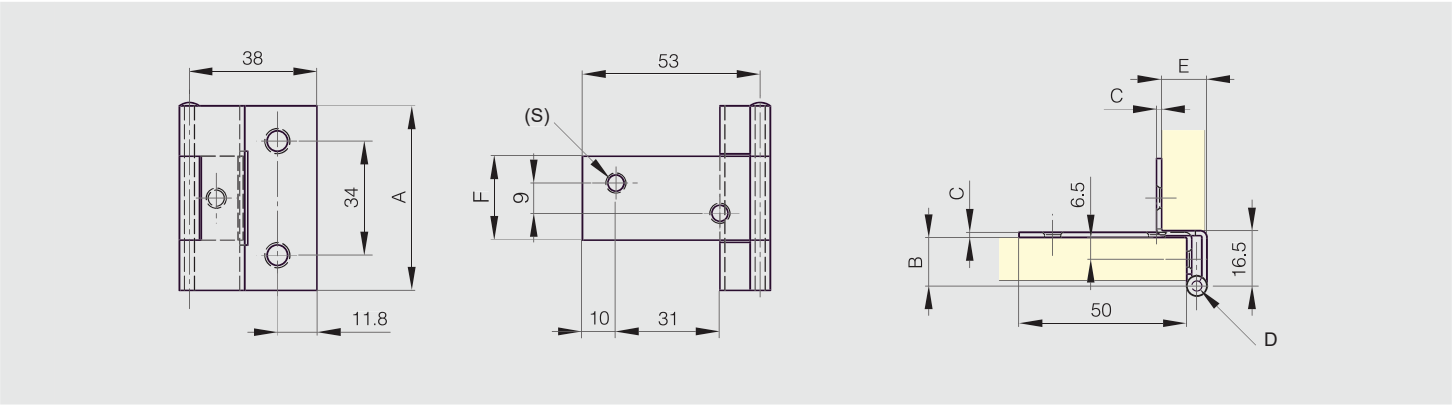

Small butt hinge with two cranked leaves 55 x 53.7 mm

Removable pin.

Part number	Material	Finish	A	B	C	D	E	F	S	Pin material	Note	Weight (g)
60-1-3303	steel	chrome plated	55	14.5	1.5	3	13.5	25	4.75	nickel plated steel	removable pin	65

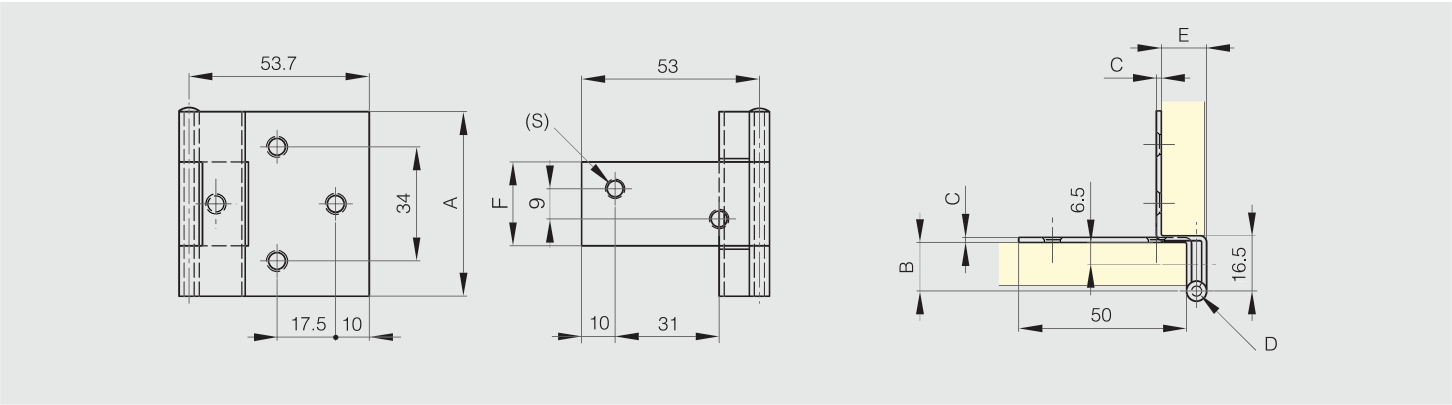

Small butt hinges with one cranked leaf 38 mm

180° STAINLESS STEEL STEEL RoHS

Part number	Material	Finish	A	B	C	D	E	F	G	S	Pin material	Weight (g)
60-1-3525	steel	chrome plated	38	7	1.5	3	18	27	21	4.5	304 stainless steel	24
60-1-3327	steel	chrome plated	38	11	1.5	3	14	27	17	4.5	304 stainless steel	24
60-1-3329	steel	nickel plated	38	11	1.5	3	14	27	17	4.5	304 stainless steel	25
62-1-3628	316L stainless steel	raw	38	15	1.5	3	14	31	17	4.5	316L stainless steel	26

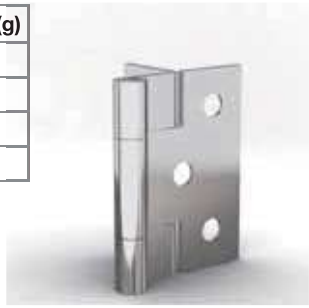

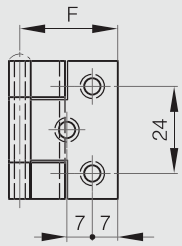

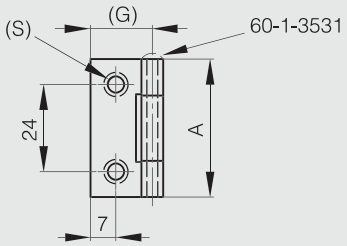

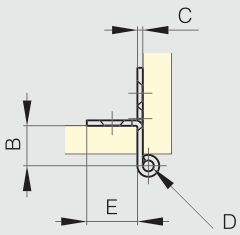

Small butt hinge with two cranked leaves 60 mm

180° STEEL RoHS

Part number	Material	Finish	A	B	C	D	E	S	Weight (g)
60-1-3620	steel	zinc plated	60	56	1.5	3	10	5	59

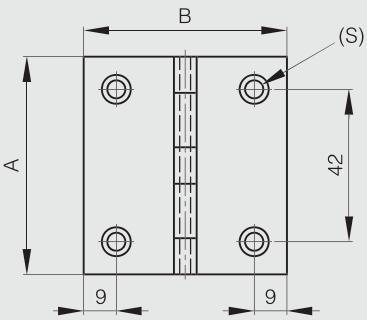

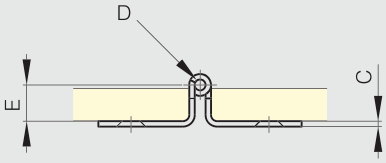

Small butt hinge with one cranked leaf 60 mm

180° STAINLESS STEEL RoHS

The same hinge is available with a spring (part number 71-1-3622).

Part number	Material	Finish	A	B	C	D	S1	S2	Weight (g)
62-1-3625	316L stainless steel	brightened	60	30	1.5	3	4.2	5	40

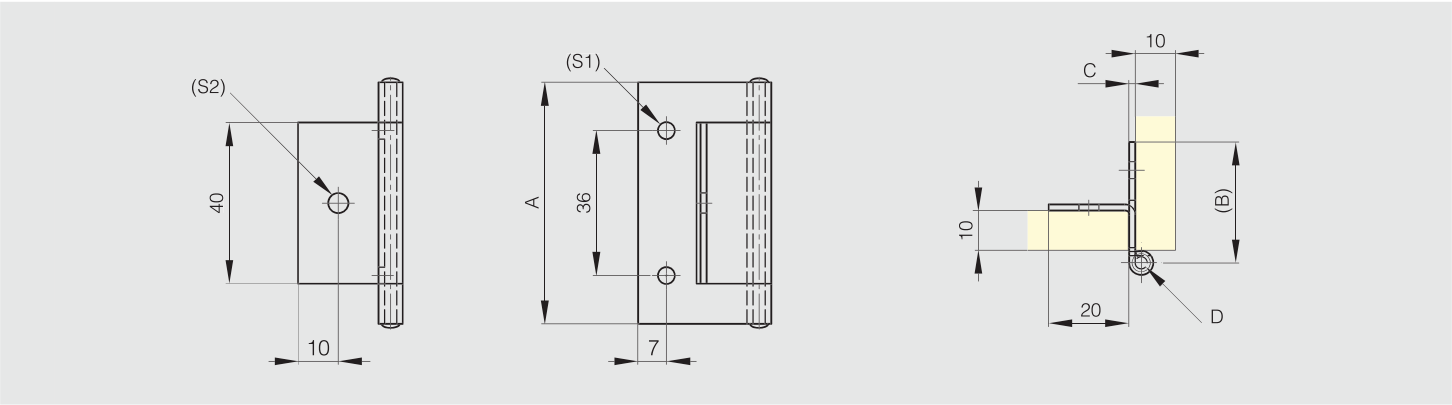

Small butt hinge with one cranked leaf 66 mm

180° STAINLESS STEEL RoHS

The same hinge is available with a spring (part number 71-1-3649).
Pin in 316 stainless steel.

Part number	Material	Finish	A	B	C	D	S	Weight (g)
62-1-3637	316 stainless steel	brightened	66	22.5	1.5	4	4	42

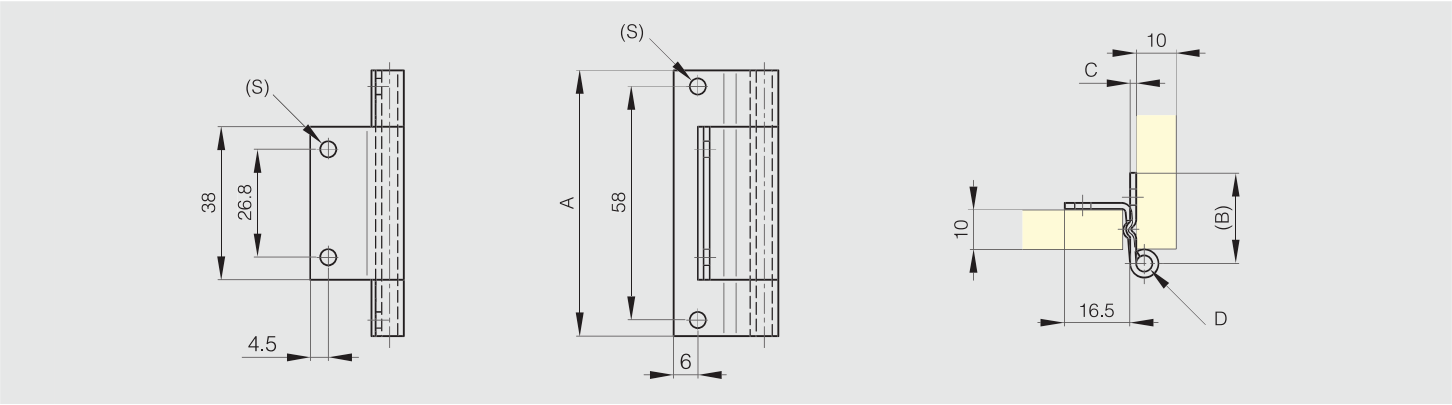

Pin hinge with one cranked leaf

Produced mainly in stainless steel, for a complete description of the materials contact us.

Part number	Material	Finish	A	B	C	D	E	S	Note	Weight (g)
12-1-3682	304 stainless steel	raw	60	72	2	5	30	4	type 2	70
12-1-3683	304 stainless steel	raw	60	72	2	5	30	4	type 1	70

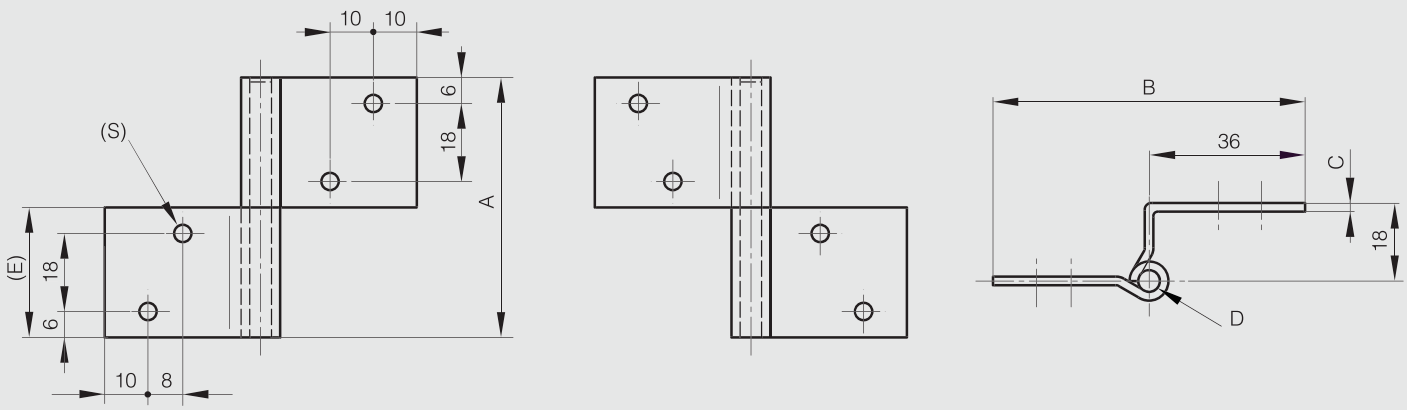

12-1-3683

12-1-3682

Stainless steel hinge with removable pin

Removable pin.

Part number	Material	Finish	A	B	C	D	Weight (g)
52-1-3877	304 stainless steel	brightened	60	94.5	1.5	4	50

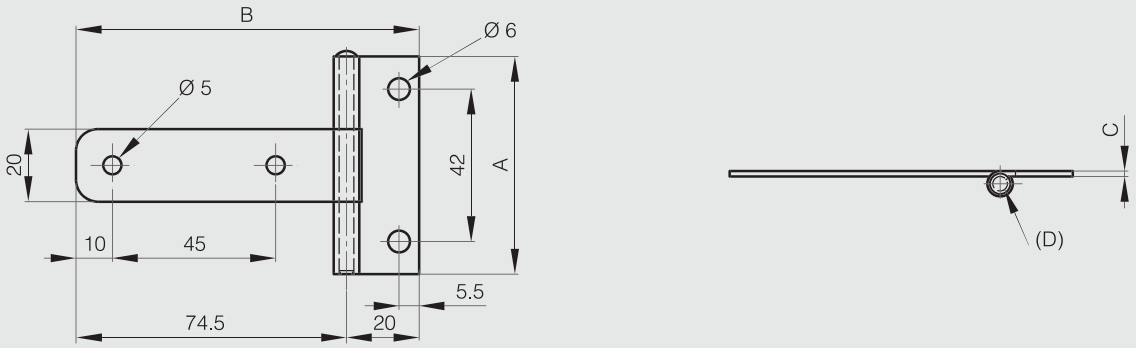

Removable pin hinges with nylon washers

Nylon washers.
Produced mainly in stainless steel, for a complete description of the materials contact us.

Part number	Material	Finish	A	B	C	D	E	S	Note	Weight (g)
52-1-3605	304 stainless steel	raw	112	136.5	2.5	5	63.5		undrilled	248
52-1-3606	304 stainless steel	raw	112	136.5	2.5	5	63.5	7	drilled	248

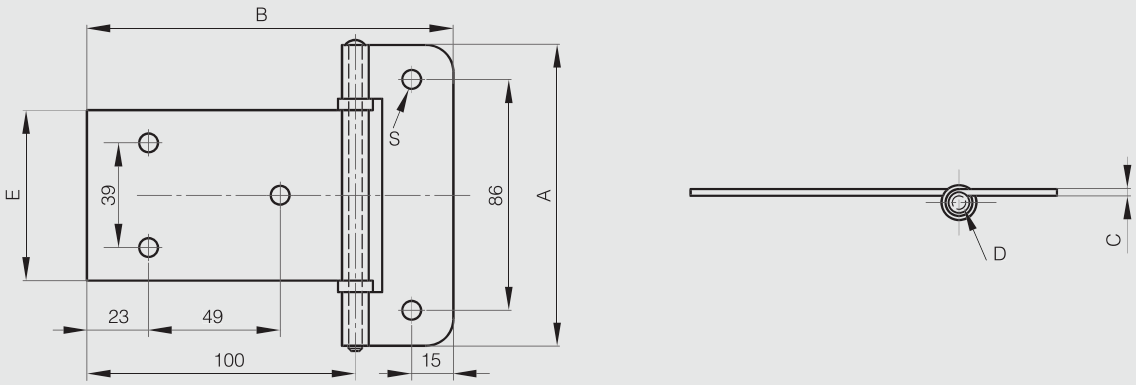

Hinges 62 x 74 mm

Part number	Material	Finish	A	B	C	D	Weight (g)
50-1-3308	steel	raw	62	74	2	4.9	60
52-1-3769	304 stainless steel	raw	62	74	2	4.9	60

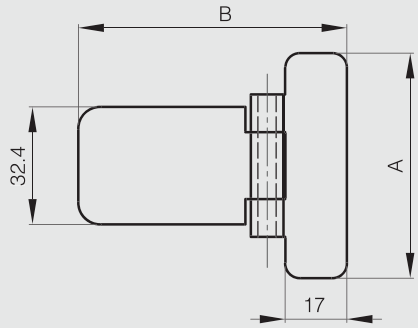

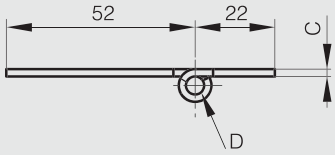

Hinge 20 x 65 mm

Part number	Material	Finish	A	B	C	D	S	Weight (g)
52-1-4013	304 stainless steel	raw	20	65	1	2	4	11

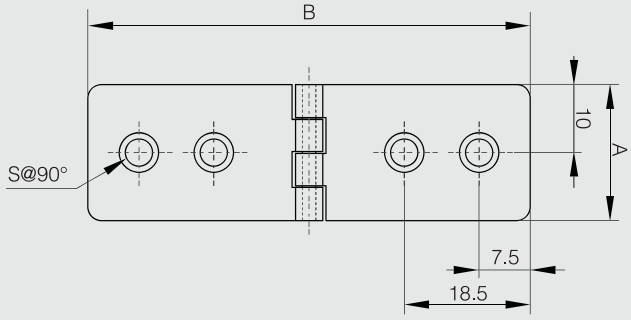

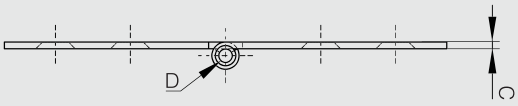

Hinges 20 x 77mm and 22 x 120 mm

270° STEEL RoHS

Part number	Material	Finish	A	B	C	D	E	F	S	Weight (g)
50-7-3736	steel	raw	20	77	1.2	3	10	16	3.2	22
50-7-3737	steel	raw	22	120	1.5	5	13.5	30	4.6	36

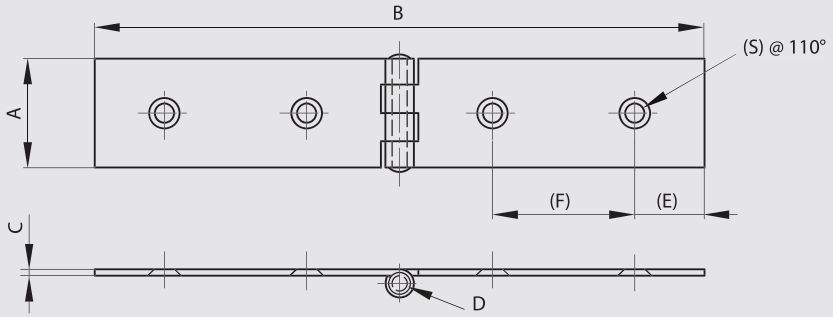

Hinge 25 x 140 mm

270° STEEL

Part number	Material	Finish	A	B	C	D	E	F	S	Note	Weight (g)
50-7-3880	steel	raw	25	140	1.5	3.5	11	46	3.5	riveted pin	45

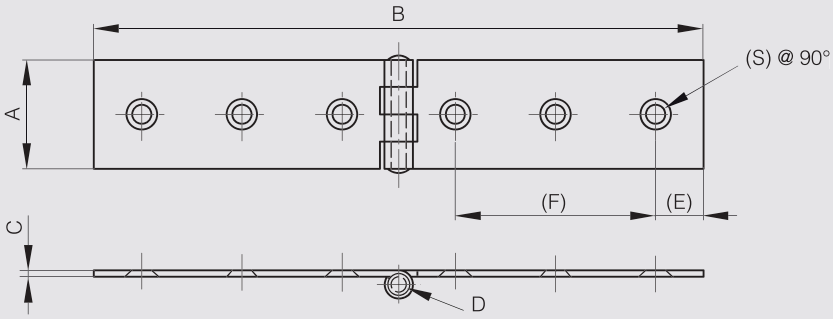

Hinges 30 x 140 mm

Available drilled or undrilled depending on part numbers.

Part number	Material	Finish	A	B	C	D	E	F	S	Note	Weight (g)
50-7-3343	steel	raw	30	140	2.5	6				undrilled	97
50-7-3339	steel	zinc plated	30	140	2.5	6	12.5	35	5.2	drilled	95

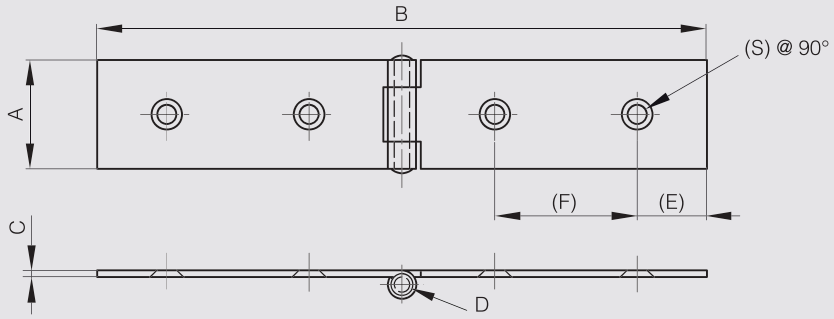

Hinge 30 x 83 mm

Part number	Material	Finish	A	B	C	D	S	Weight (g)
50-1-3313	steel	nickel plated	30	83	1.5	3.4	5.5	31

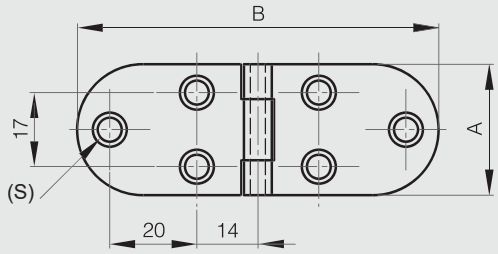

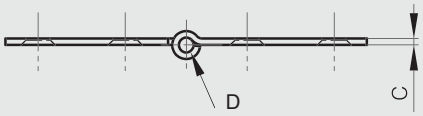

Zinc die-cast hinges 30 mm long

Nickel plated steel pin.

180° ZAMAK RoHS

Part number	Material	Finish	A	B	C	D	E	Weight (g)
72-1-9006	zinc die-cast	black	30	27.5	13	5	14.5	60
72-1-9007	zinc die-cast	black	30	22	13	5	9	42

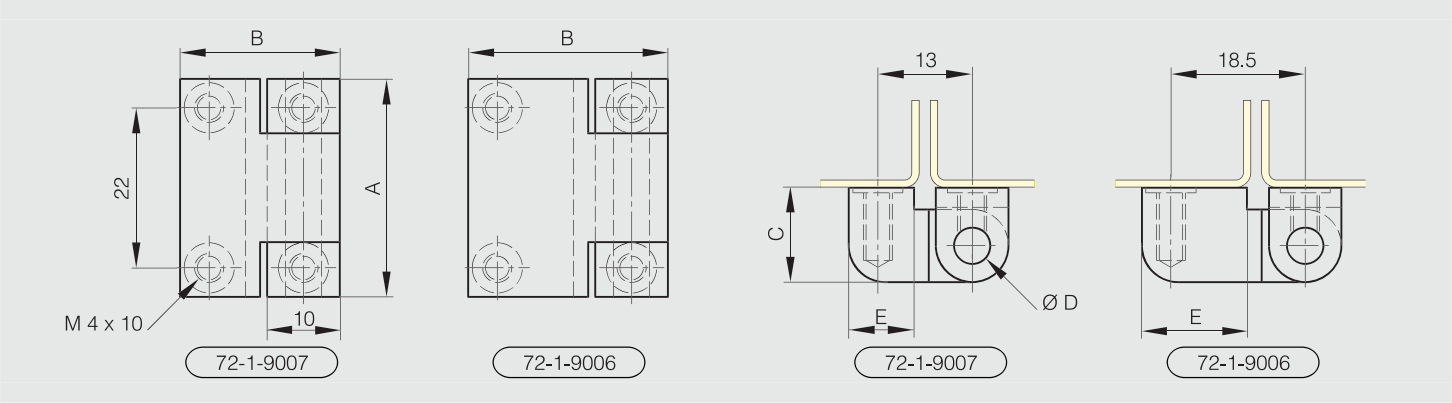

Zinc die-cast hinge 60 mm long

Nickel plated steel pin.

180° ZAMAK RoHS

Part number	Material	Finish	A	B	C	D	E	Weight (g)
72-1-9005	zinc die-cast	black	60	35	18	7	18	180

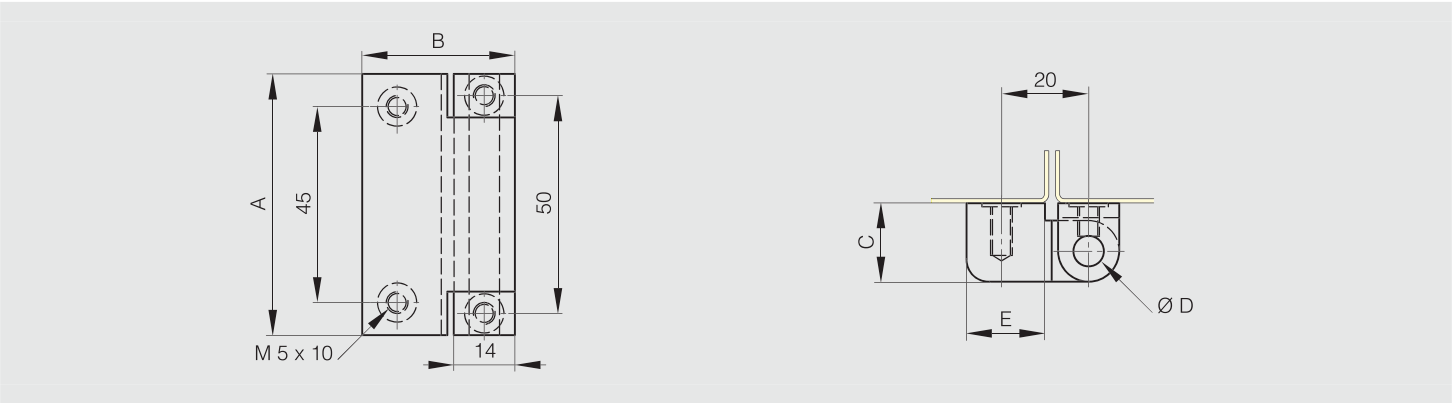

Zinc die-cast hinge 90 x 60 mm

Nickel plated steel pin.

Part number	Material	Finish	A	B	C	D	Weight (g)
72-1-9011	zinc die-cast	black	90	60	8	8	305

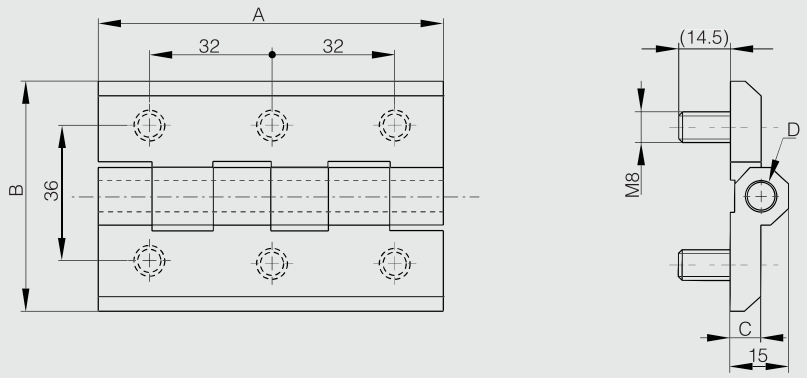

Zinc die-cast pin hinge for surface mounted door

Nylon washer.

Part number	Material	Finish	A	B	C	Weight (g)
72-1-9004	zinc die-cast	black	64	17.5	15	76

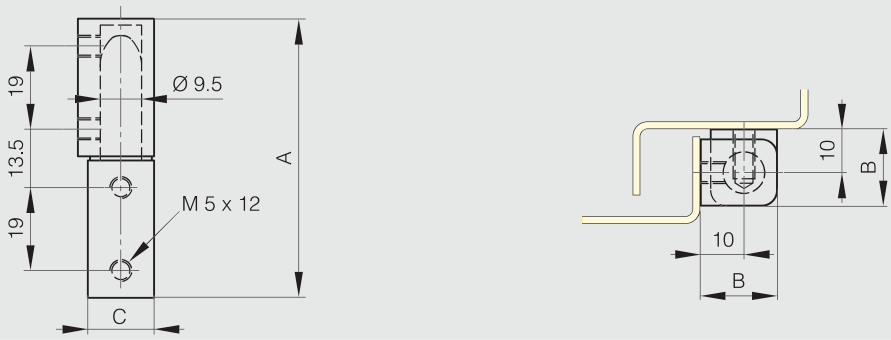

Zinc die-cast lift-off hinges 25.5 mm

Nylon washer.

Part number	Material	Finish	A	B	C	Note	Weight (g)
72-1-4206	zinc die-cast	black	25.5	20.5	10	type 2	30
72-1-4207	zinc die-cast	black	25.5	20.5	10	type 1	30

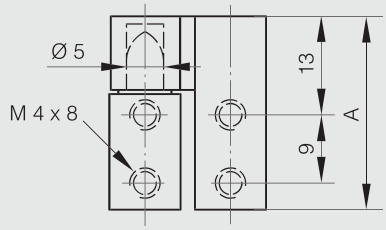

72-1-4207

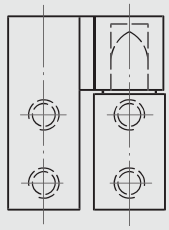

72-1-4206

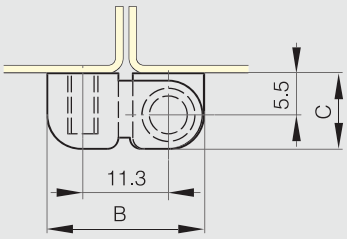

Zinc die-cast lift-off hinges 64 x 33 mm

Nylon washer.

Part number	Material	Finish	A	B	C	Note	Weight (g)
72-1-9000	zinc die-cast	black	64	33	17.5	type 2	150
72-1-9001	zinc die-cast	black	64	33	17.5	type 1	144

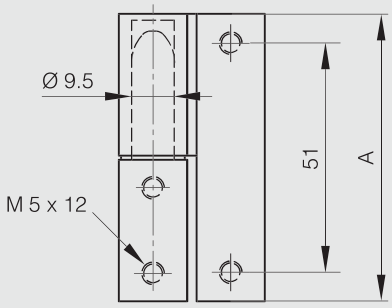

72-1-9001

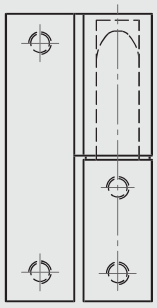

72-1-9000

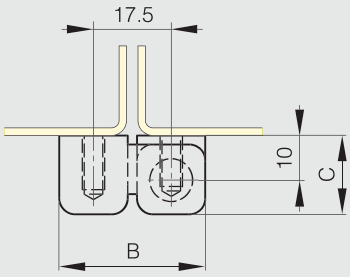

Zinc die-cast lift-off hinges 64 x 50 mm

Nylon washer.
Steel pin.

Part number	Material	Finish	A	B	C	Note	Weight (g)
72-1-9002	zinc die-cast	black	64	50	17.5	type 2	243
72-1-9003	zinc die-cast	black	64	50	17.5	type 1	247

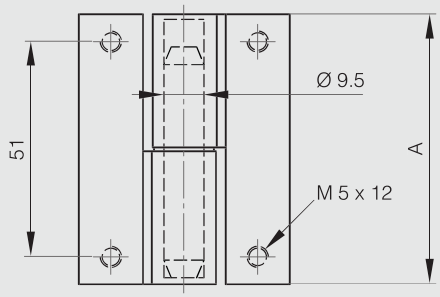

72-1-9003

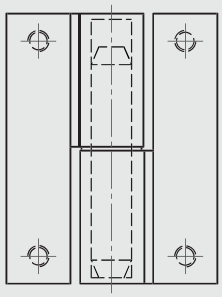

72-1-9002

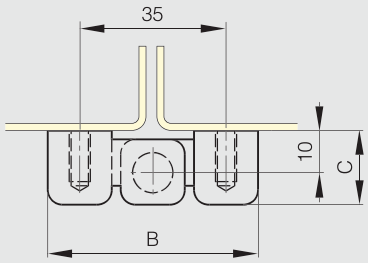

Zinc die-cast lift-off hinges 80 mm

Fixing by 2 threaded studs. Stainless steel pin.
Leaves blocked with grub screw. Unscrew it to get a ligt-off hinge.

Part number	Material	Finish	A	B	C	D	G	Note	Weight (g)
14-7-3813	zinc die-cast	black	80	65	8	8	60	type 2	330
14-7-3814	zinc die-cast	black	80	65	8	8	60	type 1	330

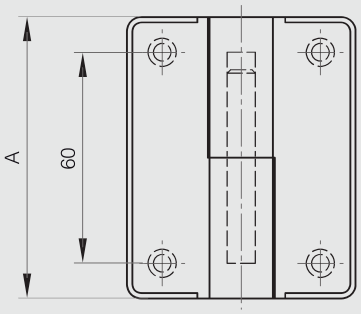

14-7-3814

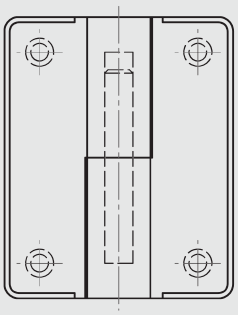

14-7-3813

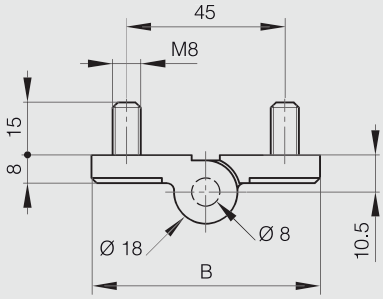

Bolt-on hinges in 2 parts

With solid brass pin and zinc plated brass washers.

Part number	Material	Finish	A	B	C	Weight (g)
72-1-3858	steel	zinc plated	33	10	16	87

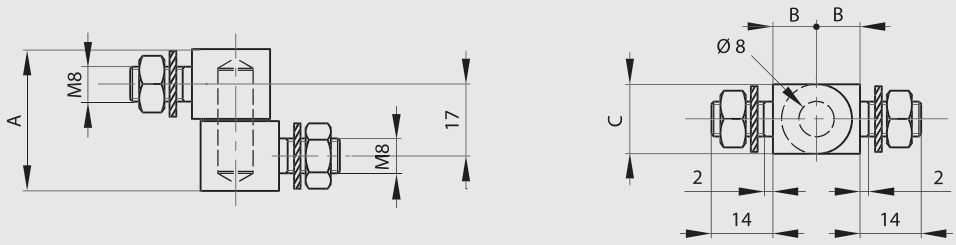

Bolt-on hinges in 3 parts - 49 mm long

With solid brass pin and zinc plated brass washers.

Part number	Material	Finish	A	B	C	D	E	Weight (g)
72-1-3733	steel	zinc plated	49	10	16	22	20	130
72-1-3857	steel	zinc plated	49	10	16	14	22.5	138

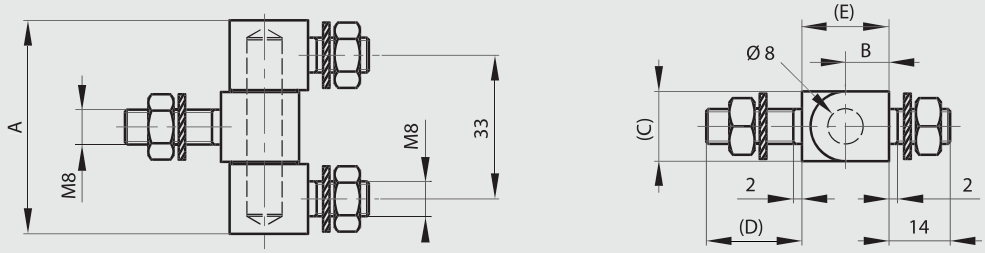

Bolt-on hinge in 3 parts - 36 mm long

With washers and M6 bolts.

Part number	Material	Finish	A	B	C	Weight (g)
72-1-3856	steel	raw	36	6.5	12	70

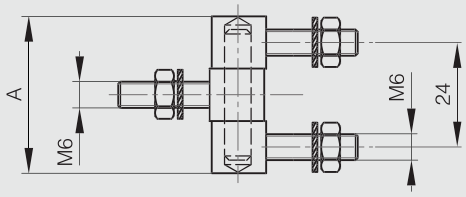

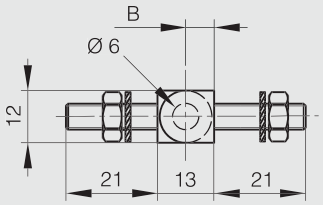

Bolt-on hinge in 3 parts with plate

No washers and no bolts.

Part number	Material	Finish	A	B	C	Weight (g)
72-1-3566	steel	raw	36	6.5	12	63

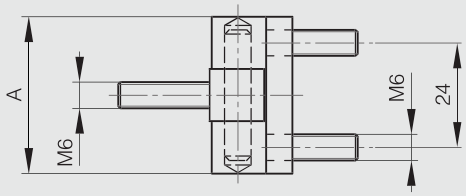

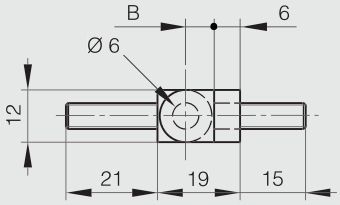

Brass hinge with removable pin - 3 knuckles

Removable pin in nickel plated steel.

Part number	Material	Finish	A	B	C	D	S	Weight (g)
72-7-3330	brass	chrome plated	45	7.5	10	3.9	2.5	43

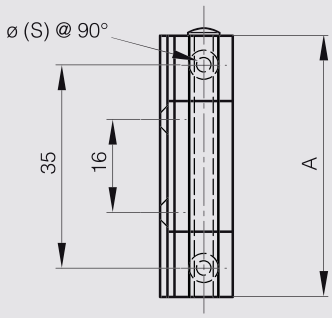

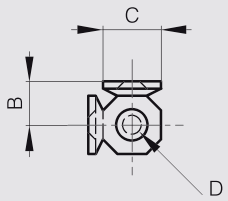

Brass hinges with removable pin - 4 knuckles

Removable pin.

Part number	Material	Finish	A	B	C	D	E	F	S	Pin material	Weight (g)
72-7-3329	brass	chrome plated	40	7.5	10	3.9	5	20	3	nickel plated steel	39
72-7-3331	brass	chrome plated	50	7.5	10	3.9	5	26.5	3	nickel plated steel	50
72-7-3332	brass	chrome plated	80	12	16	7	9.6	40	4.5	chrome plated brass	190

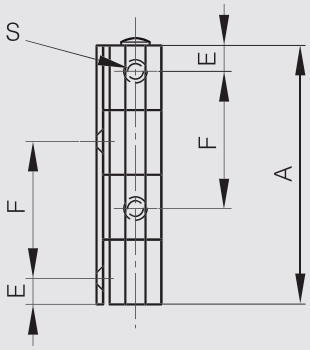

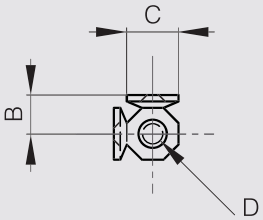

Lift-off hinges in aluminium profile with a stainless steel pin

270° ALU RoHS

Stainless steel pin.
Supplied with polymer caps.

Part number	Material	Finish	A	B	C	D	E	Note	Weight (g)
12-1-4283	6060 T5 alu	clear anodised	102	45.9	2.5	6.1	50	type 1	50
12-1-4286	6060 T5 alu	clear anodised	102	45.9	2.5	6.1	50	type 2	50
12-1-4284	6060 T5 alu	black anodised	102	45.9	2.5	6.1	50	type 1	50
12-1-4287	6060 T5 alu	black anodised	102	45.9	2.5	6.1	50	type 2	50

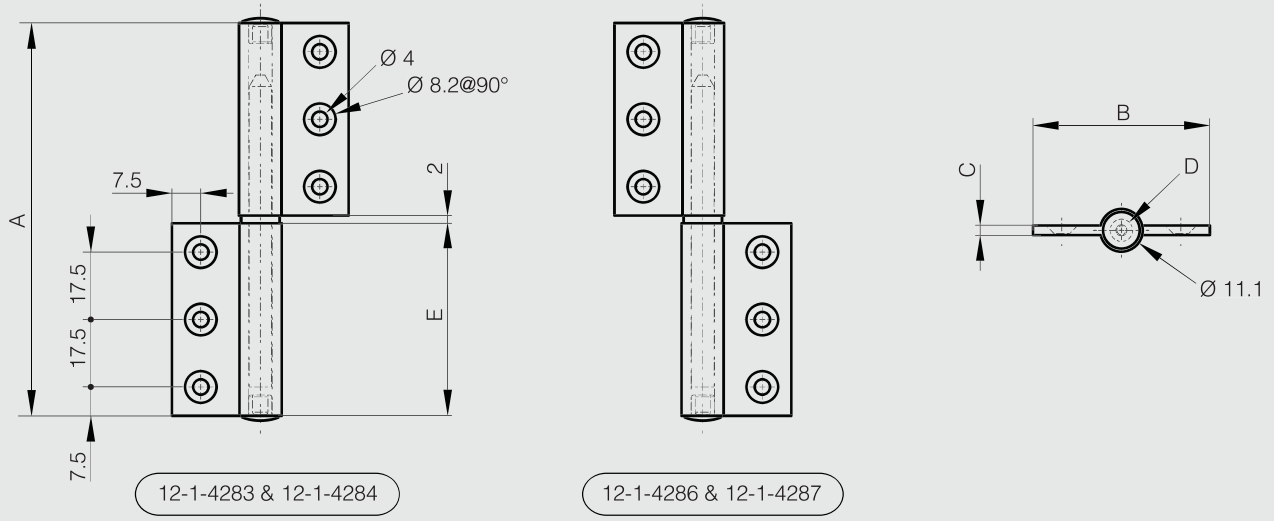

Flag hinge with washer - 62 x 62 mm

270° STEEL RoHS

Flag hinge with brass washer.

Part number	Material	Finish	A	B	C	D	E	Note	Weight (g)
12-1-3634	steel	raw	62	62	2.5	7	30	type 2	87
12-1-3635	steel	raw	62	62	2.5	7	30	type 1	87

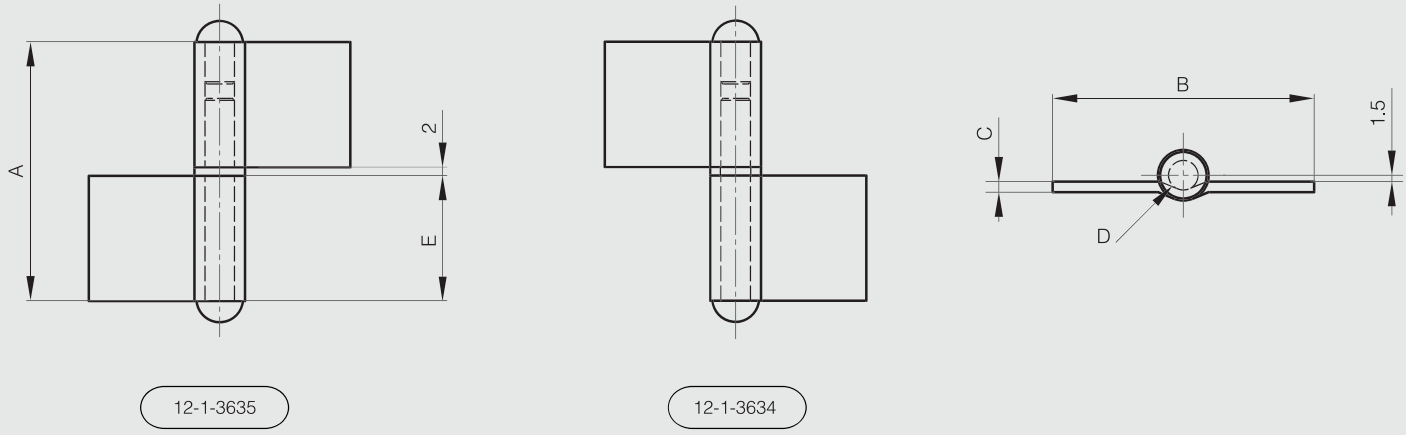

Flag hinge without washer with two offset leaves

Part number	Material	Finish	A	B	C	D	E	Weight (g)
12-1-3303	steel	raw	60	40	1.5	5.3	30	38
12-1-3849	steel	raw	80	40	1.5	5.3	40	51
12-1-3304	steel	raw	80	50	2	6	40	74
12-1-3769	304 stainless steel	raw	60	40	1.5	5.3	30	38
12-1-3770	304 stainless steel	raw	80	48	2	6	40	74

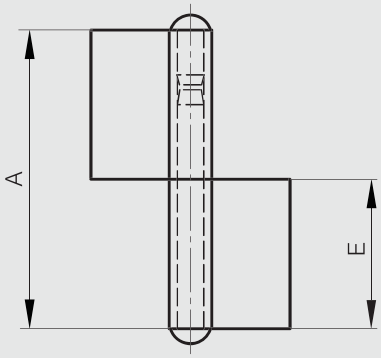

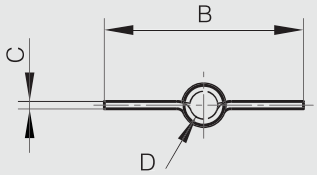

Flag hinge with washer with two offset leaves

Flag hinge with brass washer, included separately.
Produced mainly in stainless steel, for a complete description of the materials contact us.

Part number	Material	Finish	A	B	C	D	E	Weight (g)
12-1-3305	steel	raw	61.5	40	1.5	5.3	30	39
12-1-3306	steel	raw	81.5	50	2	5.8	40	75
12-1-3771	304 stainless steel	raw	61.5	40	1.5	5.3	30	39
12-1-3772	304 stainless steel	raw	81.5	48	2	5.8	40	75

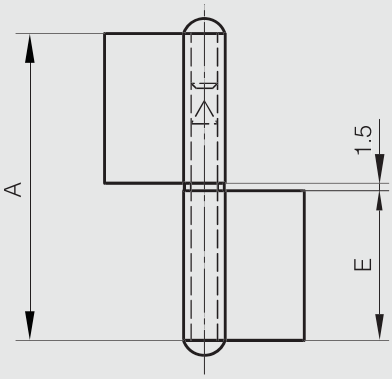

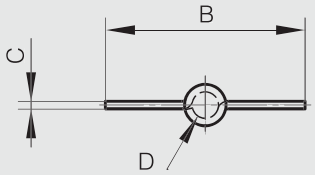

Flag hinge without washer - flat knuckle

Part number	Material	Finish	A	B	C	D	E	Note	Weight (g)
12-1-3307	steel	raw	60	40	1.5	5.3	30	type 2	39
12-1-3308	steel	raw	60	40	1.5	5.3	30	type 1	39
12-1-3309	steel	raw	80	48	2	5.8	40	type 2	76
12-1-3310	steel	raw	80	48	2	5.8	40	type 1	76

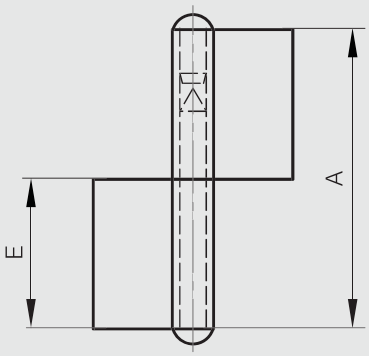

12-1-3308 & 12-1-3310

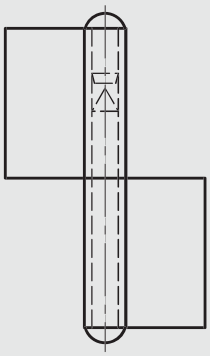

12-1-3307 & 12-1-3309

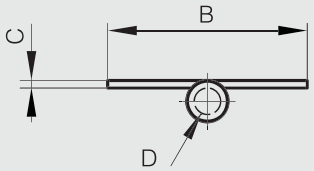

Flag hinge with washer - flat knuckle

Flag hinge with brass washer, included separately.

Part number	Material	Finish	A	B	C	D	E	Note	Weight (g)
12-1-3311	steel	raw	61.5	40	1.5	5.3	30	type 2	40
12-1-3312	steel	raw	61.5	40	1.5	5.3	30	type 1	40
12-1-3313	steel	raw	81.5	48	2	5.8	40	type 2	77
12-1-3314	steel	raw	81.5	48	2	5.8	40	type 1	77

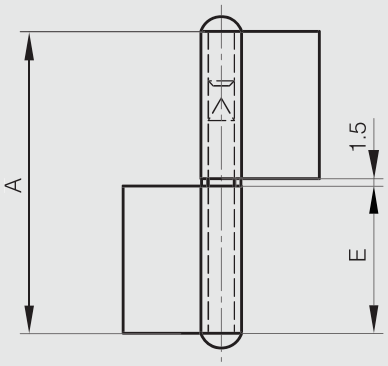

12-1-3312 & 12-1-3314

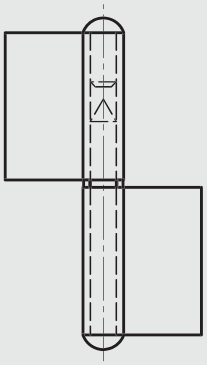

12-1-3311 & 12-1-3313

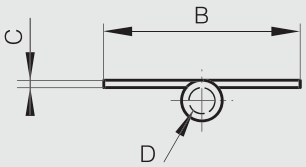

Flag hinge without washer - drilled - flat knuckle

Part number	Material	Finish	A	B	C	D	Note	Weight (g)
12-1-4258	304 stainless steel	raw	80	48	2	6	type 1	76
12-1-4285	304 stainless steel	raw	80	48	2	6	type 2	76

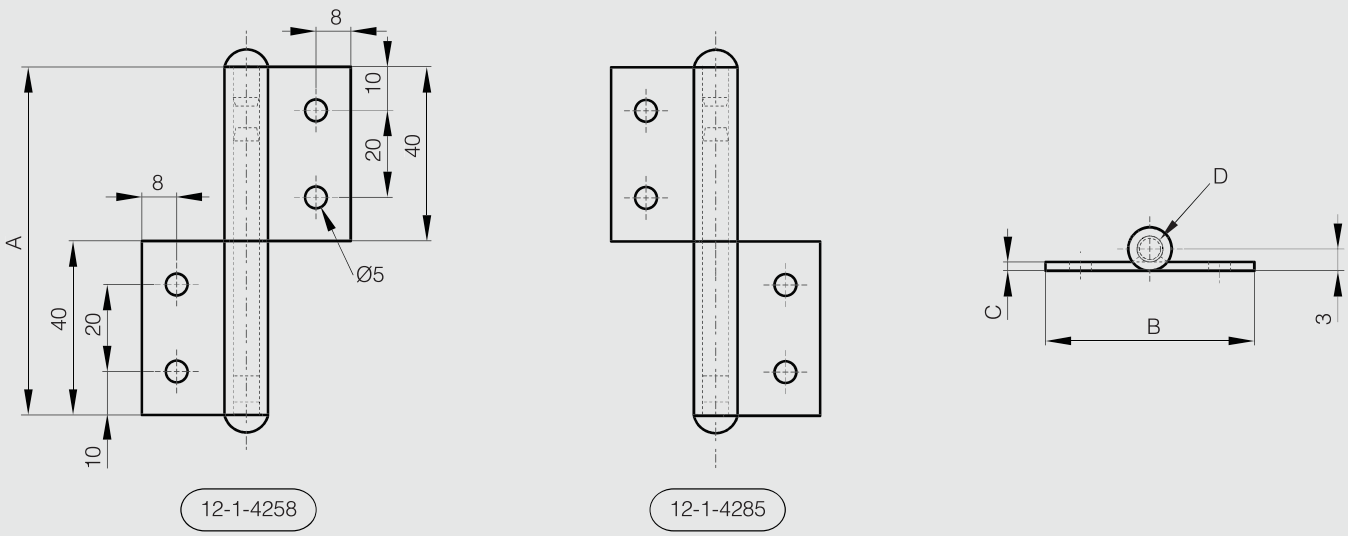

Dual Axis Torque Hinge

NOUVEAU

180° ZAMAK RoHS

Can be opened to 180°.
Shafts do not protrude when the hinge is fully open or closed.
Dual axis torque.
Different torque of two shafts provides easy operation:
Shaft A: 2.0 N.m +/-20%
Shaft B: 3.0 N.m +/-20%.

	Part number	Material	Finish	A	B	C	Torque	Weight (g)
NEW	70-7-3659	zinc die-cast	satin nickel	55	43.5	15	3.0 N.m	165

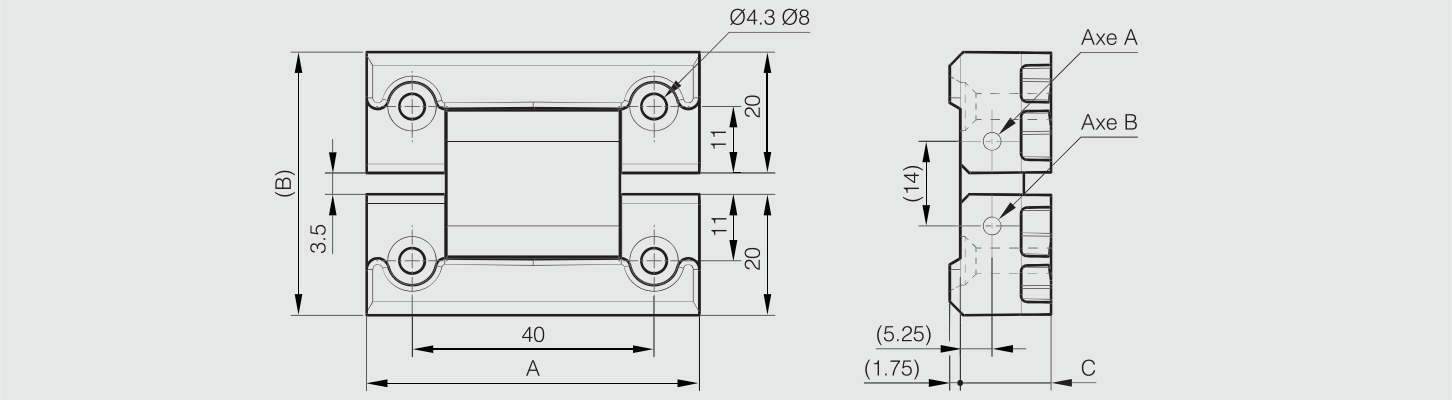

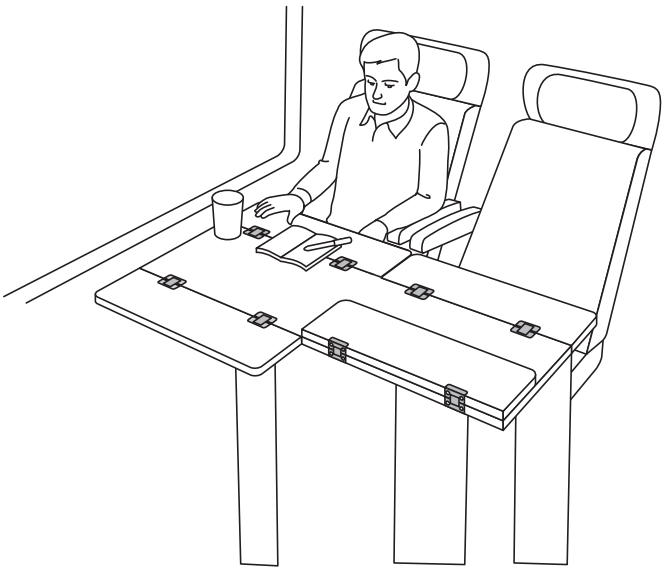

Hinge motions

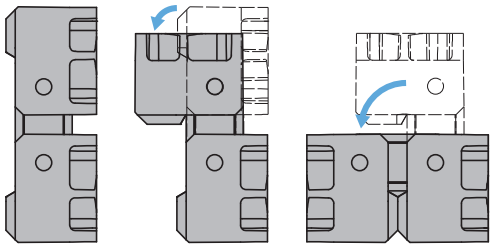

Table movement

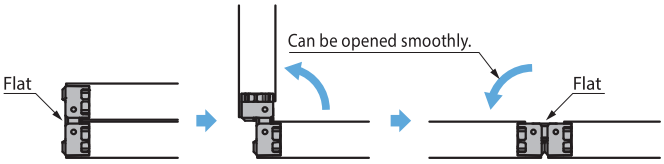

When fully opened

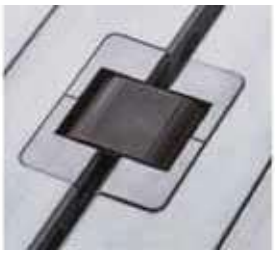

Flat and shafts do not protrude

Glass door hinge in brushed stainless steel

180° STAINLESS STEEL RoHS

Door thickness: 10 mm min.
Door weight: max. 10 kg / pair.

Supplied with EPDM gasket.
Included stainless steel bolts and stainless steel washers. Produced mainly in stainless steel, for a complete description of the materials contact us.

Part number	Material	Finish	A	B	C	D	Weight (g)
52-1-4040	304 stainless steel	brushed	40	35	2	4	80

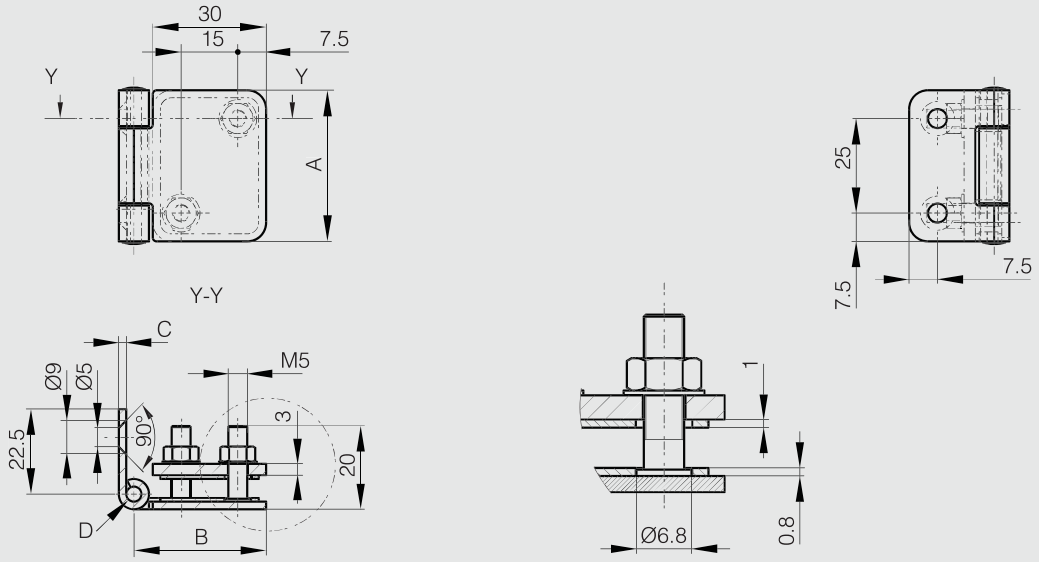

Glass door hinge in stainless steel

180° STAINLESS STEEL

Hinge for glass / acrylic doors (PMMA).
Door thickness: 4 - 6 mm.
Door weight: max. 4 kg / pair.
Leaves, pin and screw in 304 stainless steel. Plate in aluminium alloy, washer in chloroethylene.
Produced mainly in stainless steel, for a complete description of the materials contact us.

Part number	Material	Finish	A	B	C	D	Weight (g)
72-7-4254	304 stainless steel	raw	34	32	1.2	5	21

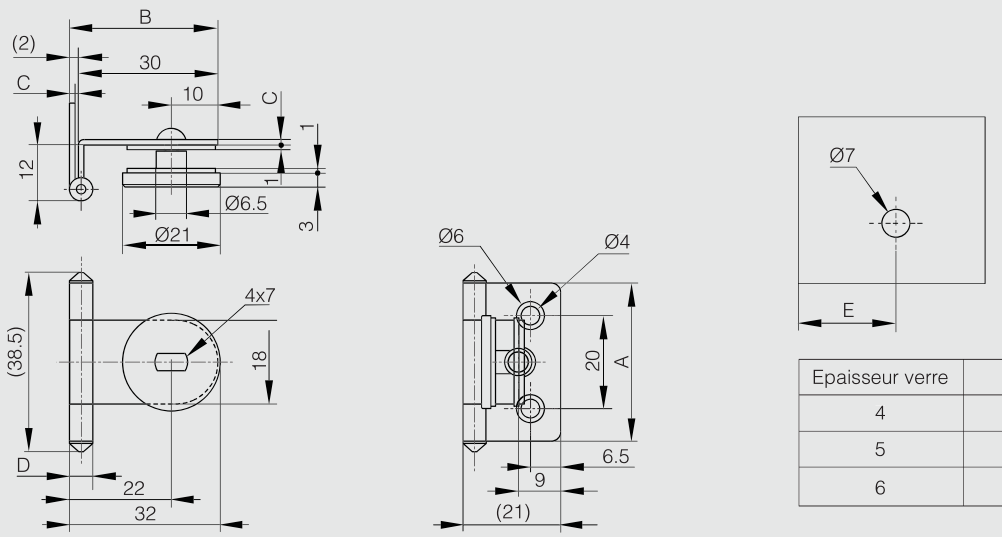

Epaisseur verre	E
4	19
5	18
6	17

LATCHING SYSTEMS

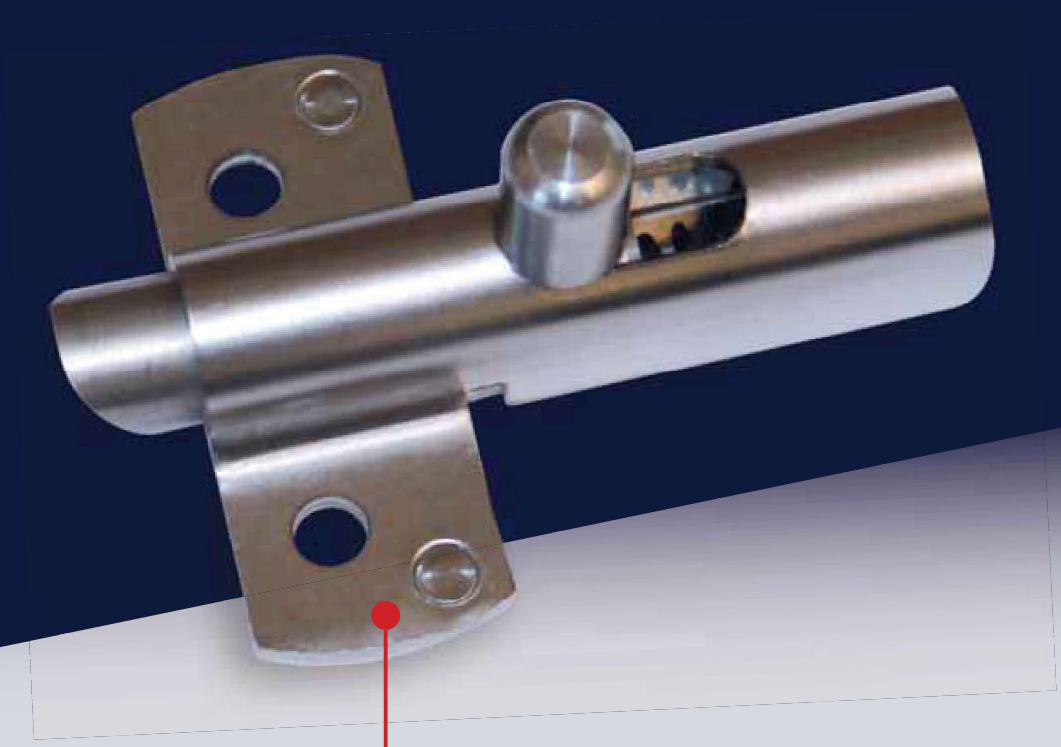

SLAM LATCHES

	Slam latch in stainless steel - bolt “nose-up”	229
	Slam latch in stainless steel - bolt “nose-down”	229
	Springloaded latches - bolt “nose-up”	230
	Springloaded latches - bolt “nose-down”	230
	Strikes for latches with dimension A = 35, 50 and 70 mm	231
	Springloaded bolt - reversible bolt	231
	Low-profile slam latch	232
	Lockable low-profile slam latch	232
	Paddle latches 68.5 x 84 mm	233
	Hooked cam	233

SPRING LOADED LATCHES

	Springloaded bolt	234
	Springloaded latch with round bolt	234
	Concealed springloaded pin hinges A	235
	Concealed springloaded pin hinges B	235
NEW	Springloaded bolt with locking system in aluminium - small dimension	236
	Springloaded bolt with locking system in aluminium	236
NEW	Strike for spring-loaded bolt and barrel bolt in aluminium	237
	Springloaded bolt with locking system A	237
	Springloaded bolt with locking system B	238
	Push barrel bolt	238

COMPRESSION LATCHES

	Mini compression latch - lift and turn	239
	Compression latches with or without key - lift and turn	240
	Lockable compression latch	241
	Flush compression latch with or without key	241
	Vector T-handle - stud mounted	242
	Vector T-handle - screw mounted	242
	Vector 2 T-handle with mounting bracket - chrome plated with fixed cam	243

	Vector 2 T-handle with mounting bracket - black version with adjustable cam	243

ROTARY LOCKS

	Clip'n Turn - Clip-on quarter turn with slotted shape	244
	Clip'n Turn - Clip-on quarter turn with wing head	245
	Quarter turn with wing knob	246
	Latch	246
	Lockable flush pop-out T-handle	247
	Cylinder lock	247
	Budget latches - square 4x4	248
	Budget latch - square 6x6 - stainless steel	248
	Spring budget latch	249
	Strike for spring budget latch 16-1-4031	249
	Budget latches - square 8x8	250
	Plastic budget latch with strike plate	250
NEW	Heavy duty budget latch - square 8x8	251
	Common key for budget latches	251

BARREL BOLTS AND HASPS

NEW	Barrel bolt in aluminium - small dimension	252
	Barrel bolt in aluminium	252
	Barrel bolt in brass	253
	Barrel bolt in stainless steel	253
	Chrome plated brass hasp	254
	Catch plate for part number 72-7-3726	254

MECHANICAL CATCHES

	Dual ball catches A	255
	Dual ball catches B	255
	Stainless steel dual ball catches	256
	Zinc die-cast dual ball catches	256
	Ball catches	257
	Roller catch without counterplate	258

	Counterplates for part number 16-1-3594	258
	Catch	259
	Counterplate for part number 16-1-3271	259
	Touch latch in steel	260
	Touch latch with steel strike	260
	Mini touch latch - snap-in installation	261
	Snap-in counter plate for part number 16-7-4302	261
	Screw mount counter plate for part number 16-7-4302	262
	Touch latch - Snap-in installation	262
	Counter plate for part number 16-7-4300	263
	Touch latch - Screw mounting - With counter plate	263
	Touch latch - Screw mounting - Strong retaining force	264
NEW	Magnetic touch latch	264
	Snap-in knuckle catch in plastic	265
	Plastic catch	265

MAGNETIC CATCHES

	Sealed compact magnetic catch	266
	Counterplate for sealed magnetic catch 16-7-4204	266
	Sealed magnetic catch	267
	Counterplate for sealed magnetic catch 16-7-4081 and 16-7-4206	267
	Ultra thin compact magnetic catch	268
	Compact magnetic catch	268
	Low profile magnetic catch	269
	Mini screw-on magnetic catch with counter plate - force 3 kg	270
	Screw-on magnetic catch with counterplate - force 3 kg	270
	Screw-on magnetic catch without counterplate - force 4 kg	271
	Counter plate for magnetic catch 16-7-3390	271
	Screw-on magnetic catches with counterplate - force 4 kg	272
	Screw-on magnetic catches with counterplate - force 4 kg - high temperature resistance	272
	Screw-on magnetic catch with counterplate - force 4 kg	273

	Screw-on magnetic catches with counterplate - force 3 to 6 kg	273
	Screw-on magnetic catches with counterplate - force 8 kg - high temperature resistance	274
	Screw-on magnetic catch without counterplate - force 12 kg	274
	Counter plate for magnetic catch 16-7-3672	275
	Screw-on magnetic catch with counter plate - force 7 kg	275
	Screw-on magnetic catch without counter plate - force 14 kg	276
	Screw-on magnetic catch without counter plate - force 7 and14 kg - high temperature resistance	276
	Snap-in magnets without counterplate	277
	Snap-in magnets	277
	Counterplates for snap-in magnets	278
	Housing	278
	Flush magnet with high temperature resistance - force 4 kg	279
	Flush compact magnetic catch without counterplate - force 5 kg	279
	Flush compact magnetic catch without counterplate - force 4.2 kg	280
	Flush compact catch without counterplate - high temperature resistance	280
	Counter plate for part numbers 16-7-3378, 16-7-3387, 16-7-3490 and 16-7-3651	281
	Self-adhesive magnetic profile	282

TOGGLES LATCHES

	Rotary toggle latches	283
	Spring loaded rotary toggle latches	283
	Padlockable rotary toggle latches	284
	Lockable toggle latch without strike	285
	Strikes for part numbers 16-1-4050 and 16-1-4257	285
	Zinc die-cast toggle latches with or without lockable options	286
	Soft toggle latch	287
	Large soft toggle latch	287
	Flexible T-handle latch	288
	Toggle latches without strike - 50 mm	289
	Strikes for part numbers 16-7-3410, 16-7-3525 and 16-7-3527	289

INDEX - LATCHING SYSTEMS

	Toggle latches with strike - 52 mm	290
	Toggle latches without strike - 58.1 mm	291
	Strikes for part numbers 16-7-3875 and 16-7-3876	291
	Toggle latches without strike - 80.2 mm	292
	Strikes for part numbers 16-7-3411 and 16-7-3526	292
	Toggle latch without strike - 89.7 mm	293
	Strike for part number 16-7-3880	293
	Toggle latches without strike - 88.5 mm	294
	Strikes for part numbers 16-7-3508 and 16-7-3829	294
	Other strikes for part numbers 16-7-3508 and 16-7-3829	295
	Other strikes for part number 16-7-3508	295
	Toggle latches without strike (consistent tension)	296
	Strike for part number 16-7-3891	296
	Heavy duty toggle latch with strike	297
	Padlockable toggle latches - 49 mm	298
	Strike for part number 16-7-3394	298
	Padlockable toggle latch without strike - 65 mm	299
	Strike for part number 16-7-3879	299
	Padlockable toggle latches - 80.2 mm	300
	Strikes for part numbers 16-7-3723 and 16-7-3724	300
	Padlockable toggle latches - 80.5 mm	301
	Strike for part numbers 16-7-3395 and 16-7-3397	301
	Padlockable toggle latches - 97.6 mm	302
	Strikes for part numbers 16-7-3883 and 16-7-3884	302
	Padlockable toggle latches - 122 mm	303
	Strike for part number 16-7-3664	303
	Spring loaded and padlockable toggle latches - 52 mm	304
	Strikes for part numbers 16-7-3759 and 16-7-3760	304
	Spring loaded and padlockable toggle latches - 74 mm	305
	Strikes for part numbers 16-7-3765 and 16-7-3766	305

	Spring loaded and padlockable toggle latch - 70.9 mm	306
	Strike for part number 16-7-3917	306
	Adjustable toggle latches with strike - padlockable - 82 mm to 118 mm	307
	Adjustable toggle latches with strike - padlockable - 174 mm	307
	Spring loaded toggle latch without strike 35.8 mm	308
	Strike for part number 16-7-3906	308
	Spring loaded toggle latches without strike - 70.8 mm	309
	Spring loaded toggle latch without strike - with push button	309
	Strikes for part numbers 16-7-3911, 16-7-3918 and 16-7-3920	309
	Spring loaded toggle latches without strike - 52 mm	310
	Strikes for part numbers 16-7-3735 and 16-7-3736	310
	Spring loaded toggle latches without strike - 74 mm	311
	Strikes for part numbers 16-7-3745, 16-7-3747 and 16-7-3748	311
	Spring loaded toggle latches without strike - 108 mm	312
	Strikes for part numbers 16-7-3400 and 16-7-3402	312
	Other strikes for part numbers 16-7-3400 and 16-7-3402	313
	Adjustable toggle latches with secondary lock and strike	314
	Adjustable toggle latch with strike - 60 mm	314
	Adjustable toggle latches without strike 70.6 mm	315
	Strikes for part numbers 16-7-3932, 16-7-3933 and 16-7-3934	315
	Adjustable toggle latches with strike 82 mm and 103 mm long	316
	Adjustable toggle latches with strike 118 mm	316
	Adjustable toggle latches with strike 88 mm	317
	Adjustable toggle latch with strike - 135 mm	317
	Adjustable toggle latches with strike 138 mm	318
	Adjustable toggle latches with secondary lock without strike	318
	Strike for part number 16-1-4231	319
	Other strikes for part number 16-1-4231	319
	Mini toggle latch without strike - 30.5 mm	320
	Toggle latch without strike 62.5 mm	320

	Toggle latch without strike - 63.6 mm	321
	Toggle latches without strike - 64 mm	321
	Toggle latches without strike - 67.6 mm	322
	Toggle latch without strike - 73.5 mm	322
	Toggle latch without strike - 106 mm	323
	Hooked toogle latch without strike	323

Slam latch in stainless steel - bolt “nose-up”

Stainless steel slam latch.

Part number	Material	Finish	A	B	C	D	E	F	G	H	K	S	Weight (g)
16-1-4265	304 stainless steel	raw	56	73.5	2.7	1.2	20	22	30	29.7	12	5.5	87

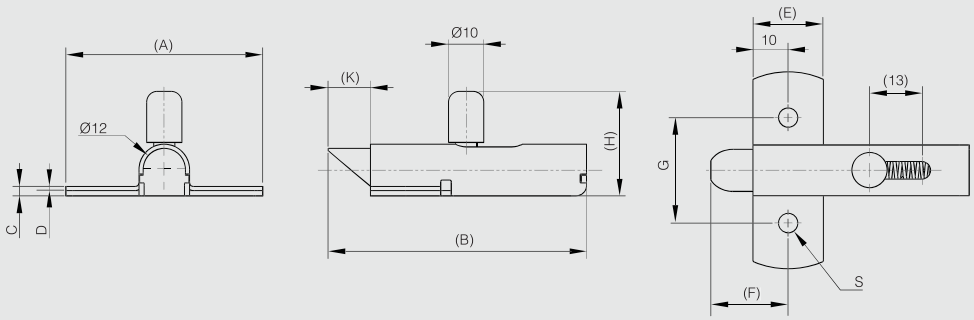

Slam latch in stainless steel - bolt “nose-down”

Stainless steel slam latch.

Part number	Material	Finish	A	B	C	D	E	F	G	H	K	S	Weight (g)
16-1-4282	304 stainless steel	raw	56	73.5	2.7	1.2	20	22	30	29.7	12	5.5	87

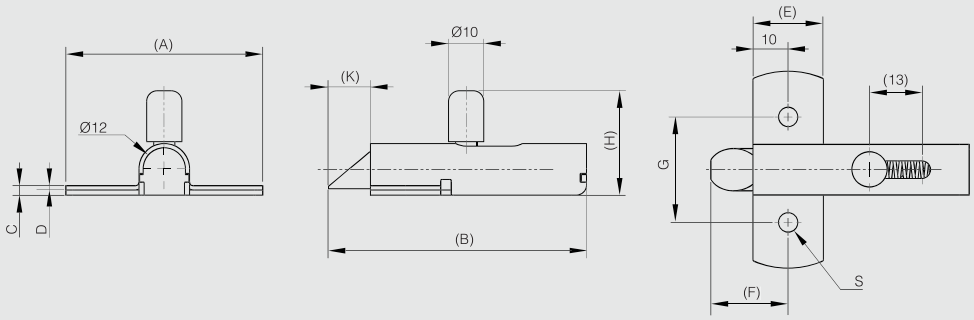

Springloaded latches - bolt “nose-up”

Slam latches.

BRASS STEEL RoHS

Part number	Material	Finish	A	B	C	D	E	F	G	H	J	K	S	Weight (g)
16-1-3625	steel	zinc plated	35	36.5	1.2	1	11	13.5	23	19	8	8	3.5	20
16-1-3626	brass	chrome plated	35	36.5	1.2	1	11	13.5	23	19	8	8	3.5	24
16-1-3628	steel	zinc plated	50	56	1.5	1.2	16	19	34	29.5	12	11	5.5	71
16-1-3629	brass	chrome plated	50	56	1.5	1.2	16	19	34	29.5	12	11	5.5	75
16-1-3631	steel	zinc plated	70	73	2	1.5	22	28	45	38	16	16	7	129
16-1-3632	brass	chrome plated	70	73	2	1.5	22	28	45	38	16	16	7	163

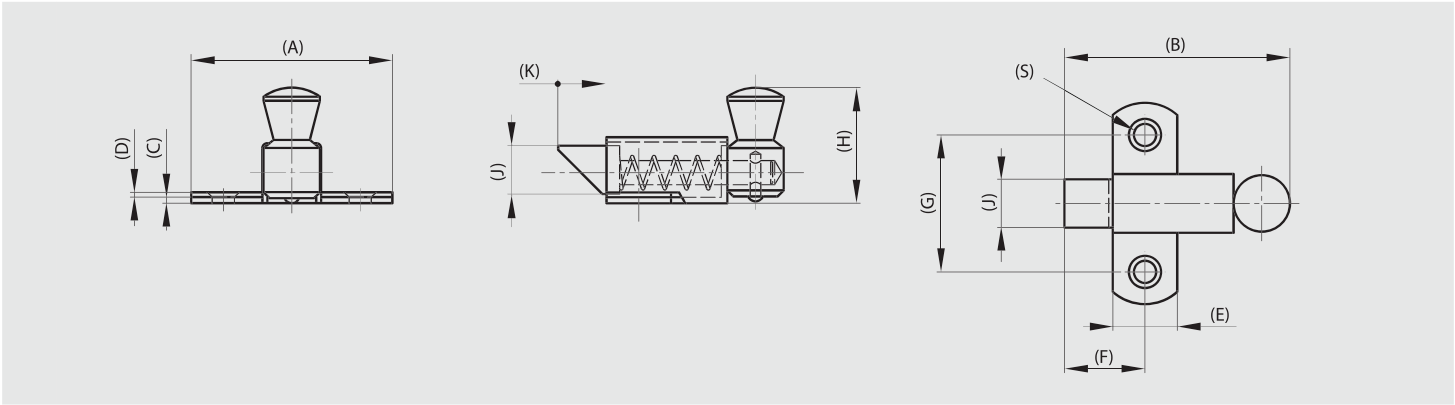

Springloaded latches - bolt “nose-down”

Slam latches.

BRASS STEEL RoHS

Part number	Material	Finish	A	B	C	D	E	F	G	H	J	K	S	Weight (g)
16-1-3430	steel	zinc plated	35	36.5	1.2	1	11	13.5	23	19	8	8	3.5	20
16-1-3431	brass	chrome plated	35	36.5	1.2	1	11	13.5	23	19	8	8	3.5	24
16-1-3433	steel	zinc plated	50	56	1.5	1.2	16	20	34	29	12	12	5.5	71
16-1-3434	brass	chrome plated	50	56	1.5	1.2	16	20	34	29	12	12	5.5	75
16-1-3436	steel	zinc plated	70	73	2.0	1.5	22	28	45	38	16	16	7	129
16-1-3437	brass	chrome plated	70	73	2.0	1.5	22	28	45	38	16	16	7	163

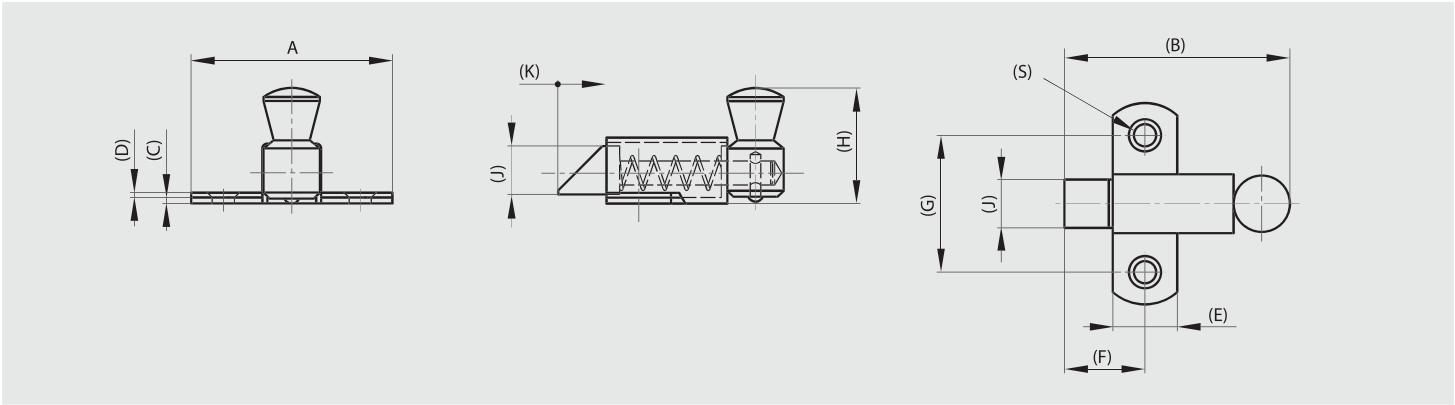

Strikes for latches with dimension A = 35, 50 and 70 mm

BRASS STEEL RoHS

Part number	Material	Finish	A	B	C	D	G	H	S	Weight (g)
16-1-3633	steel	zinc plated	35	11	1.2	11.5	23	11.5	3.5	5
16-1-3634	brass	chrome plated	35	11	1.2	11.5	23	11.5	3.5	5
16-1-3636	steel	zinc plated	50	16	1.5	16	34	16	4.8	12
16-1-3637	brass	chrome plated	50	16	1.5	16	34	16	4.8	13
16-1-3639	steel	zinc plated	68.5	22	2	21	43.5	21	7	32
16-1-3640	brass	chrome plated	68.5	22	2	21	43.5	21	7	33

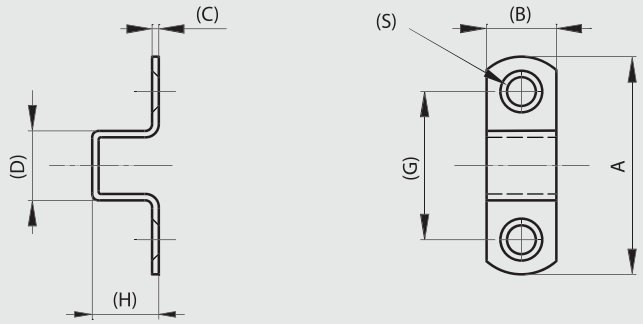

Springloaded bolt - reversible bolt

STAINLESS STEEL STEEL RoHS

Slam bolt - reversible.
Bolt can be manually unassembled to be positioned 'nose-up' or 'nose-down'.
Minimum load 50 N for full bolt travel.

Part number	Material	Finish	A	B	C	K	Note	Weight (g)
16-7-4220	steel	zinc plated	63.2	57	17.2	7	bolt delivered 'nose-up'	185
16-7-3835	304 stainless steel	raw	63.2	57	17.2	7	bolt delivered 'nose-down'	185

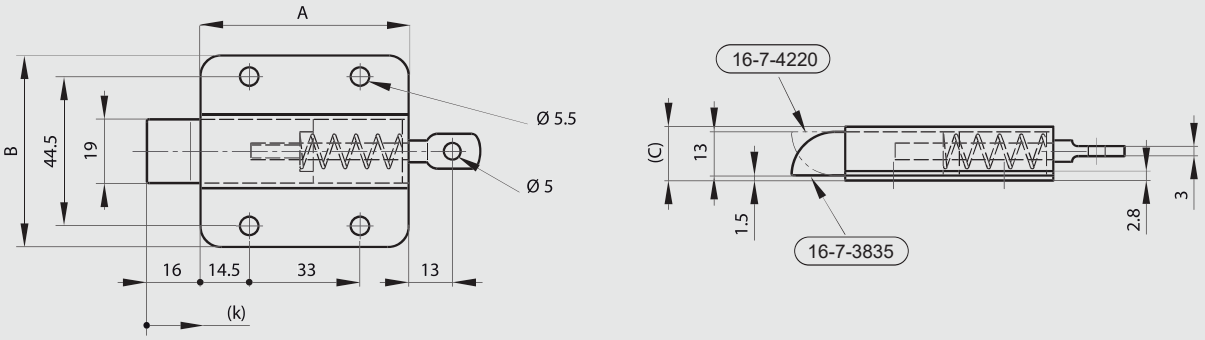

Low-profile slam latch

Material: UL94-HB ABS.

POLYMER RoHS

Part number	Material	Finish	A	C	Weight (g)
16-7-4273	polymer	black	61	35.5	58

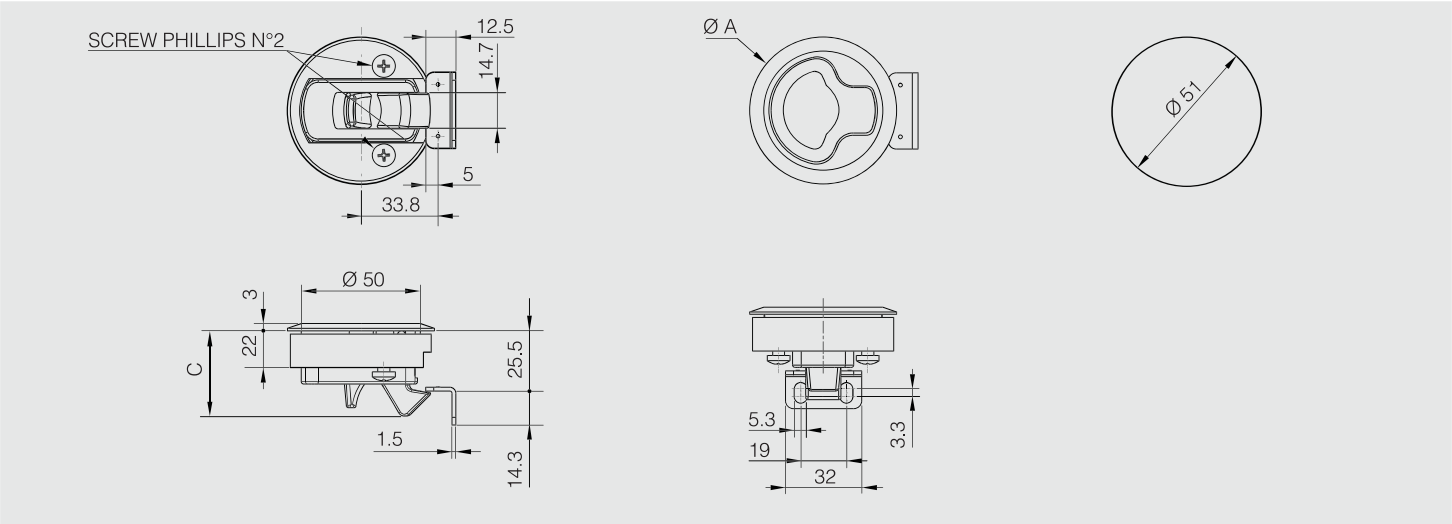

Lockable low-profile slam latch

Material: UL94-HB ABS.

POLYMER RoHS

Part number	Material	Finish	A	C	Weight (g)
16-7-4275	polymer	black	61	35.5	58

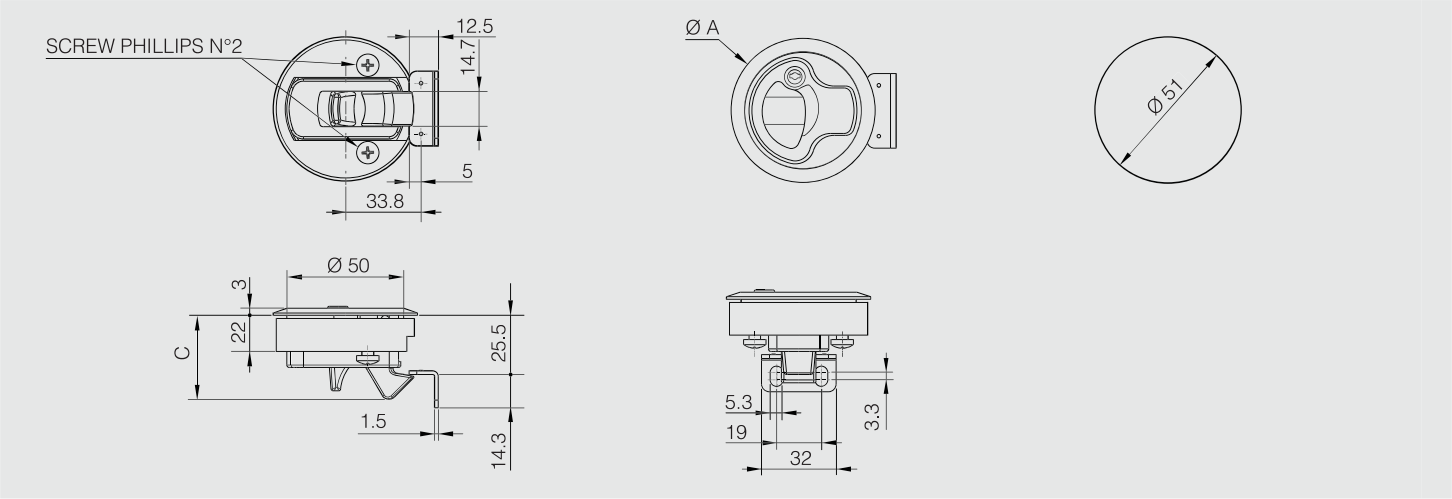

Paddle latches 68.5 x 84 mm

STAINLESS STEEL

Available with or without key.
Keyed alike for version with cylinder.
Spring in stainless steel.

Part number	Material	Finish	A	B	Note	Weight (g)
16-1-4105	steel	zinc plated	68.5	84	without key	184
16-1-4106	steel	zinc plated	68.5	84	with key	184
16-1-4217	steel	black	68.5	84	without key	184
16-1-4107	304 stainless steel	raw	68.5	84	without key	184
16-1-4108	304 stainless steel	raw	68.5	84	with key	184

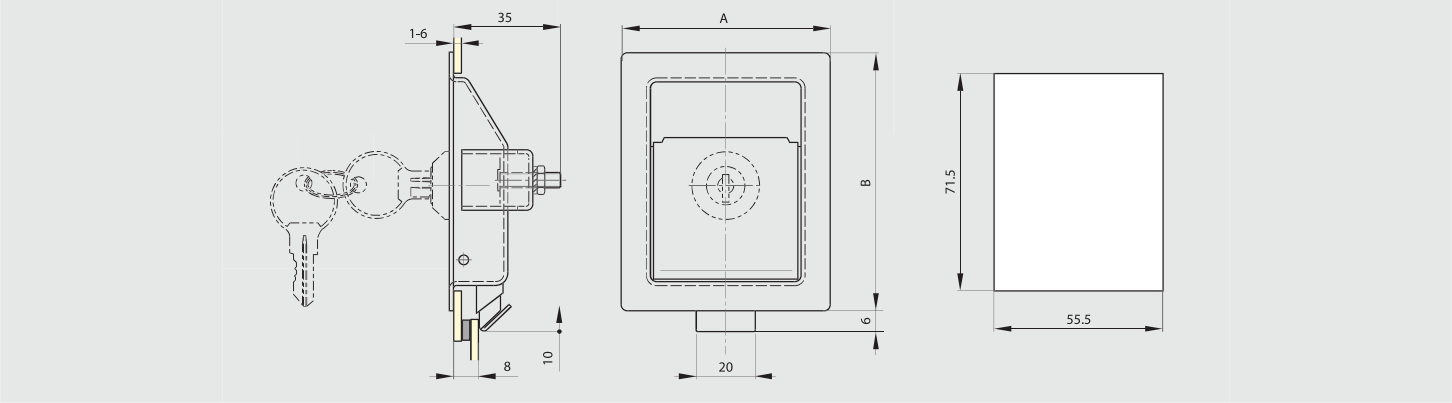

Hooked cam

ZAMAK RoHS

Hooked cam can be fitted to any standard quarter turn.

Part number	Material	Finish	Note	Weight (g)
16-7-4061	zinc die-cast	zinc plated	right	40
16-7-4062	zinc die-cast	zinc plated	left	40

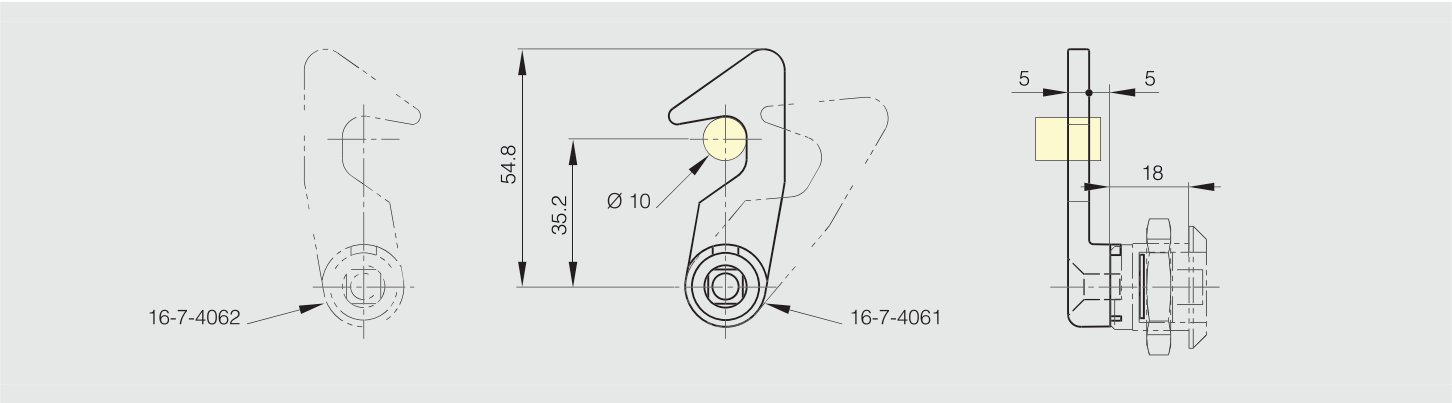

Springloaded bolt

STEEL RoHS

Heavy duty range. No stop when open.

Part number	Material	Finish	A	B	K	Note	Weight (g)
16-1-9026	steel	zinc plated	132	50	17	no stop	175

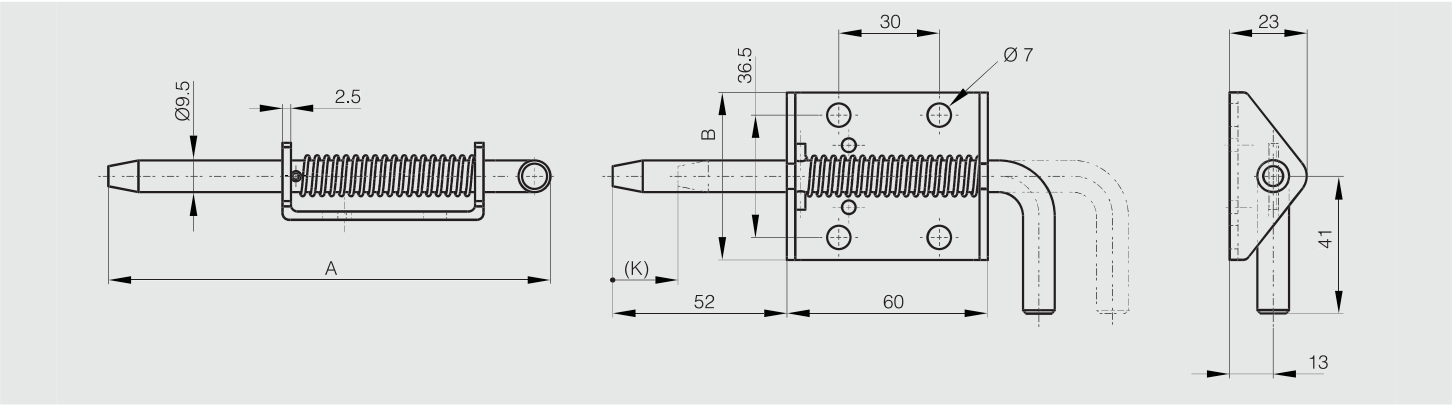

Springloaded latch with round bolt

STEEL RoHS

Part number	Material	Finish	A	B	H	K	S	Weight (g)
16-1-3647	steel	zinc plated	35	43.5	19	10	3.5	21

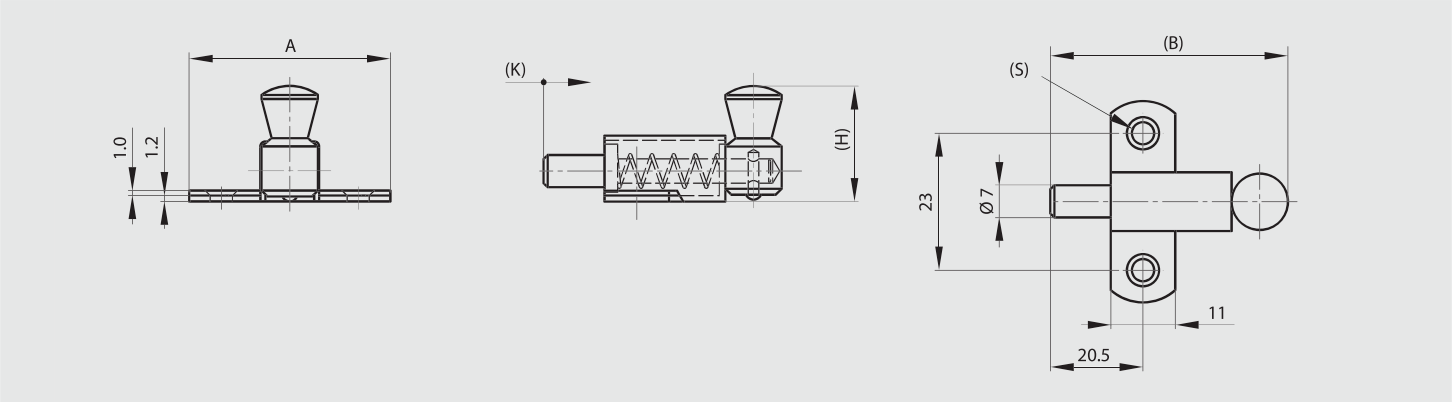

Concealed springloaded pin hinges A

STAINLESS STEEL STEEL RoHS

Stainless steel spring.
Hinges in raw steel and zinc plated steel with a zinc plated pin.
304 stainless steel pin for hinges in stainless steel.
Circlip in 1.4122 stainless steel.

Part number	Material	Finish	A	B	C	D	K	Note	Weight (g)
12-1-3856	steel	raw	82	18.2	2.8	6	12	type 2	46
12-1-3857	steel	raw	82	18.2	2.8	6	12	type 1	46
12-1-3854	steel	zinc plated	82	18.2	2.8	6	12	type 2	46
12-1-3855	steel	zinc plated	82	18.2	2.8	6	12	type 1	46
12-1-3858	304 stainless steel	raw	82	18.2	2.8	6	12	type 2	46
12-1-3859	304 stainless steel	raw	82	18.2	2.8	6	12	type 1	46

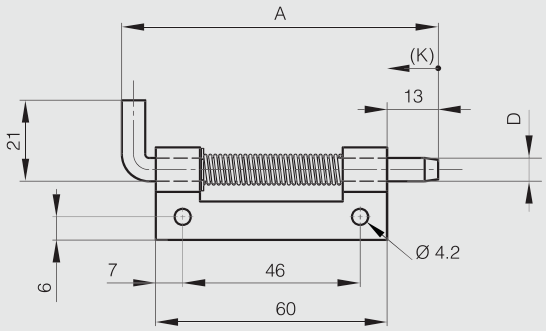

12-1-3857 & 12-1-3855 & 12-1-3859

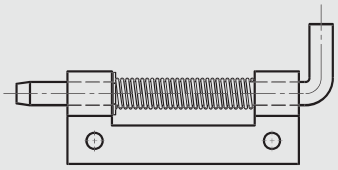

12-1-3856 & 12-1-3854 & 12-1-3858

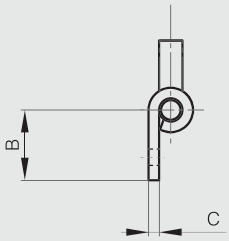

Concealed springloaded pin hinges B

STAINLESS STEEL STEEL RoHS

Stainless steel spring.
Zinc plated pin for hinges in raw steel and zinc plated steel.
304 stainless steel pin for hinges in stainless steel.
Circlip in 1.4122 stainless steel.

Part number	Material	Finish	A	B	C	D	K	Note	Weight (g)
12-1-3950	steel	raw	82	21	14	5	12	type 2	39
12-1-3951	steel	raw	82	21	14	5	12	type 1	39
12-1-3860	steel	zinc plated	82	21	14	5	12	type 2	39
12-1-3861	steel	zinc plated	82	21	14	5	12	type 1	39
12-1-3862	304 stainless steel	raw	82	21	14	5	12	type 2	39
12-1-3863	304 stainless steel	raw	82	21	14	5	12	type 1	39

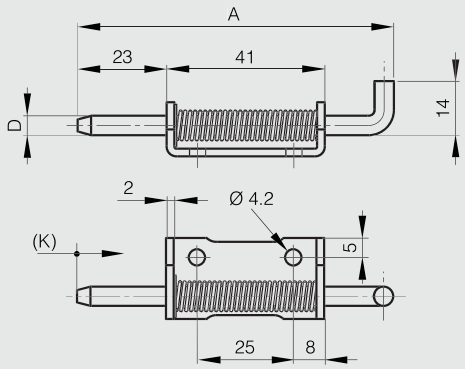

12-1-3951 & 12-1-3861 & 12-1-3863

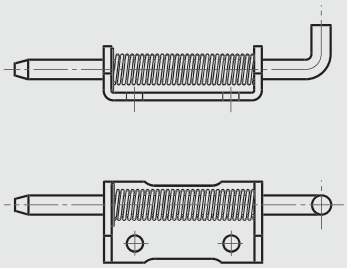

12-1-3950 & 12-1-3860 & 12-1-3862

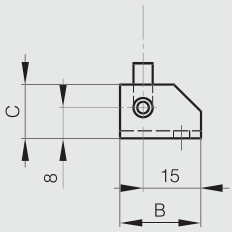

Springloaded bolt with locking system in aluminium - small dimension

NEW

ALU RoHS

Bolt can be held back in unlocked position.
Body: clear anodised aluminium.
Shaft and handle: raw aluminium.
Cap: PE, black.
Spring: stainless steel.

	Part number	Material	Finish	A	B	C	Note	Weight (g)
NEW	16-1-4316	alu 6060 T5	clear anodised	30	22.5	18.2	type 2	9
NEW	16-1-4317	alu 6060 T5	clear anodised	30	22.5	18.2	type 1	9

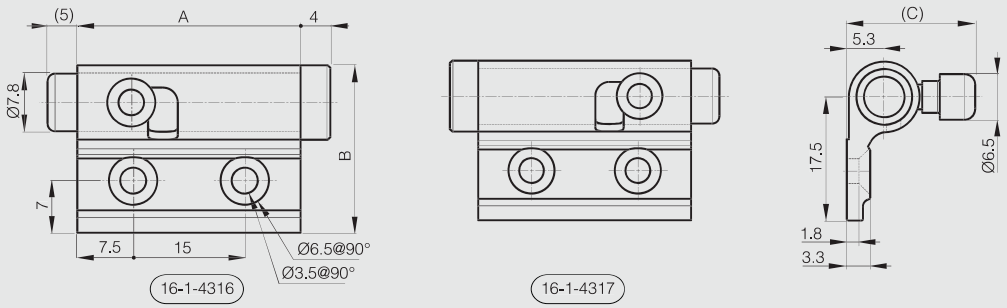

Springloaded bolt with locking system in aluminium

ALU RoHS

Stop when open.
Body: clear anodised aluminium.
Shaft and handle: raw aluminium.
Cap: PE, black.
Spring: stainless steel.
No strike included (strike part number 16-1-4323).

Part number	Material	Finish	A	B	C	Note	Weight (g)
16-1-4312	6060 T5 alu	clear anodised	60	36.5	34	type 2	58
16-1-4313	6060 T5 alu	clear anodised	60	36.5	34	type 1	58

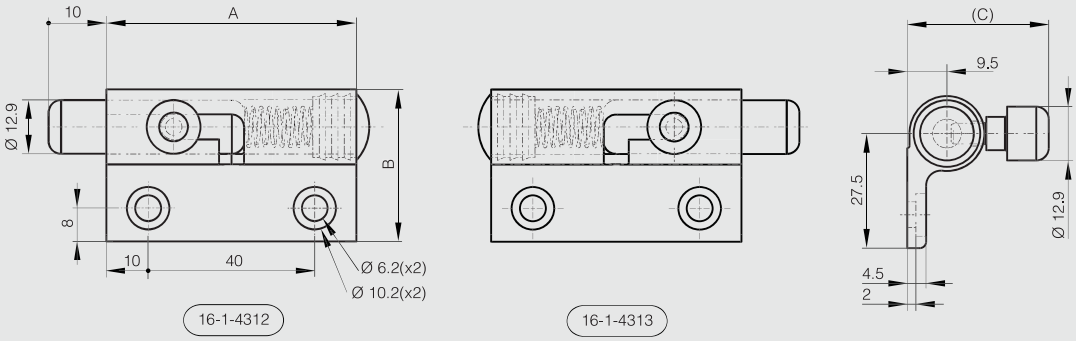

Strike for spring-loaded bolt and barrel bolt in aluminium

NEW

Strike for:
- Spring loaded bolt with locking system part numbers: 16-1-4312 and 16-1-4313
- Barrel bolt part number: 16-1-4311.

	Part number	Material	Finish	A	B	C	Weight (g)
NEW	16-1-4323	5754 alu	anodised	25	37	19	11

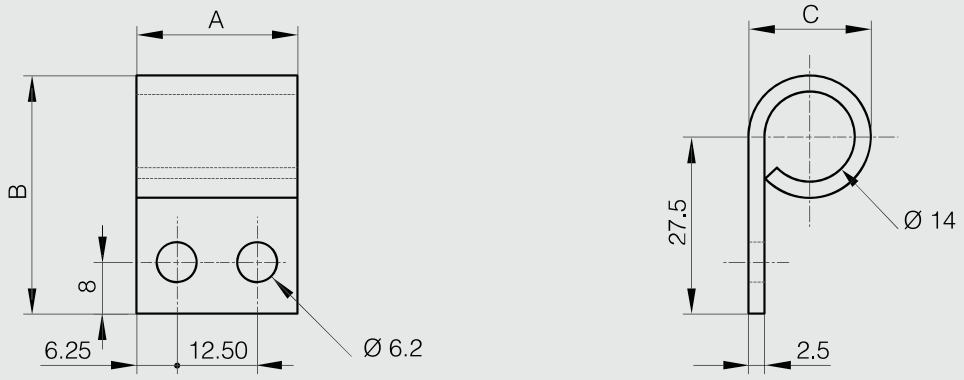

Springloaded bolt with locking system A

STEEL RoHS

Heavy duty range. Stop when open.

Part number	Material	Finish	A	B	H	K	S	Weight (g)
16-1-4034	steel	zinc plated	152	75	34	20	9	340

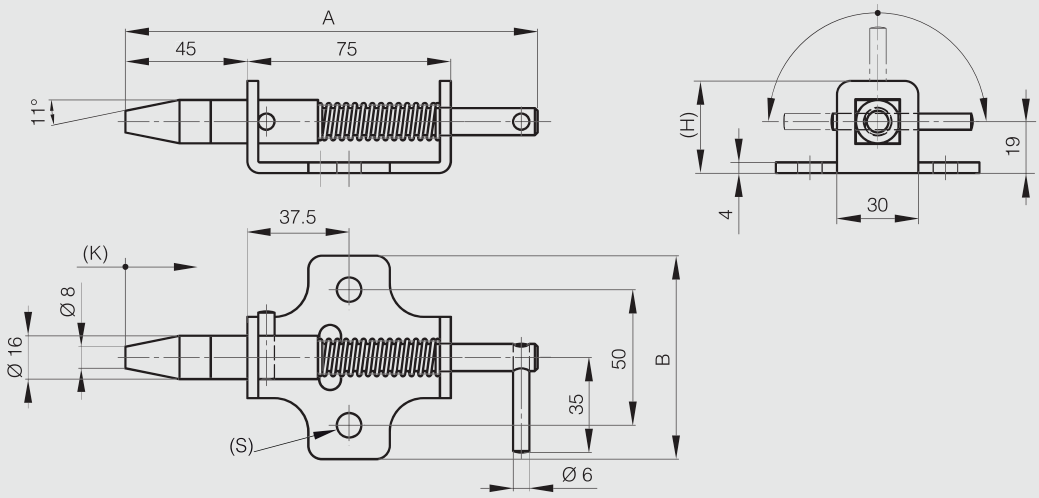

Springloaded bolt with locking system B

STAINLESS STEEL STEEL RoHS

Heavy duty range. Stop when open.

Part number	Material	Finish	A	B	K	Weight (g)
16-1-9007	steel	zinc plated	132	50	17	175
16-1-9025	304 stainless steel	raw	132	50	17	170

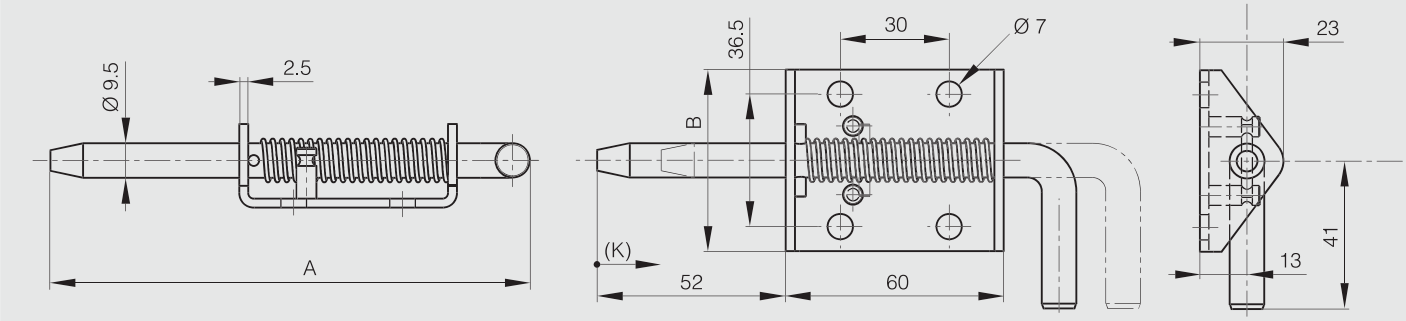

Push barrel bolt

STAINLESS STEEL RoHS

Stainless steel latch with steel shaft and plastic button.
Produced mainly in stainless steel, for a complete description of the materials contact us.

Part number	Material	Finish	A	B	C	Weight (g)
16-1-9008	304 stainless steel	raw	64	33.5	15	44

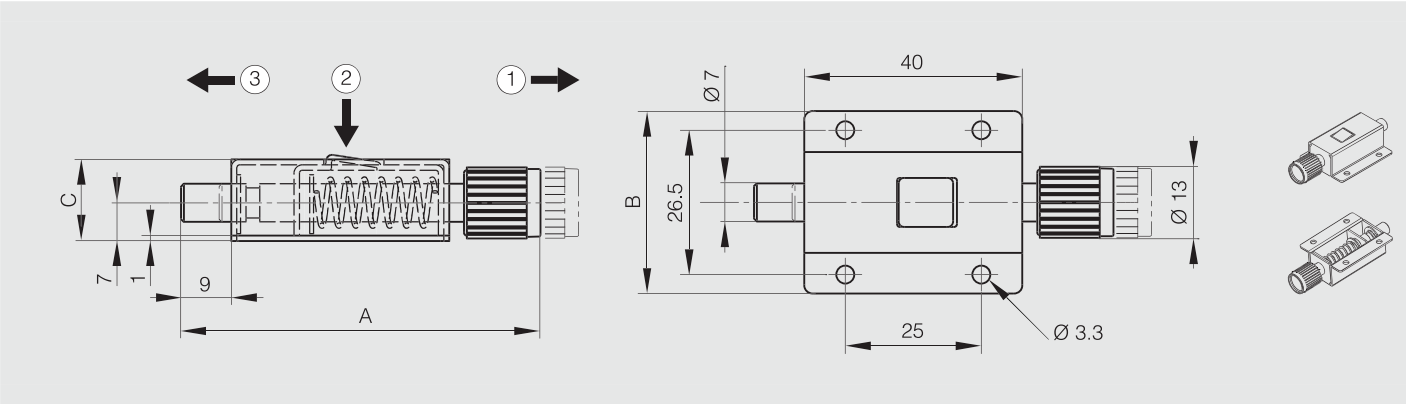

Mini compression latch - lift and turn

ZAMAK RoHS

Dimension C adjustable with the nut.
Easy and fast unlocking.
Body in zinc-die, bracket and cam in zinc plated steel.

Part number	Material	Finish	A	B	C	Weight (g)
16-1-9019	zinc die-cast	black	45	21.4	14-20	50

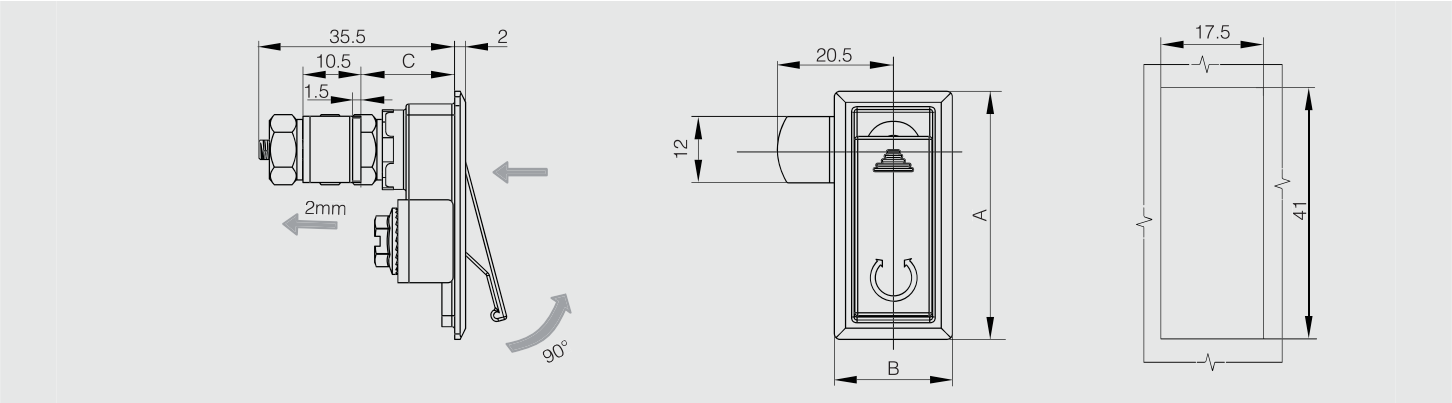

Compression latches with or without key - lift and turn

Keyed alike (one key number) for version with cylinder 16-1-4113.

Part number	Material	Finish	A	B	C	Note	Weight (g)
16-1-4112	zinc die-cast	black	79	36	52	without key	204
16-1-4113	zinc die-cast	black	114	38.5	52	with key	204

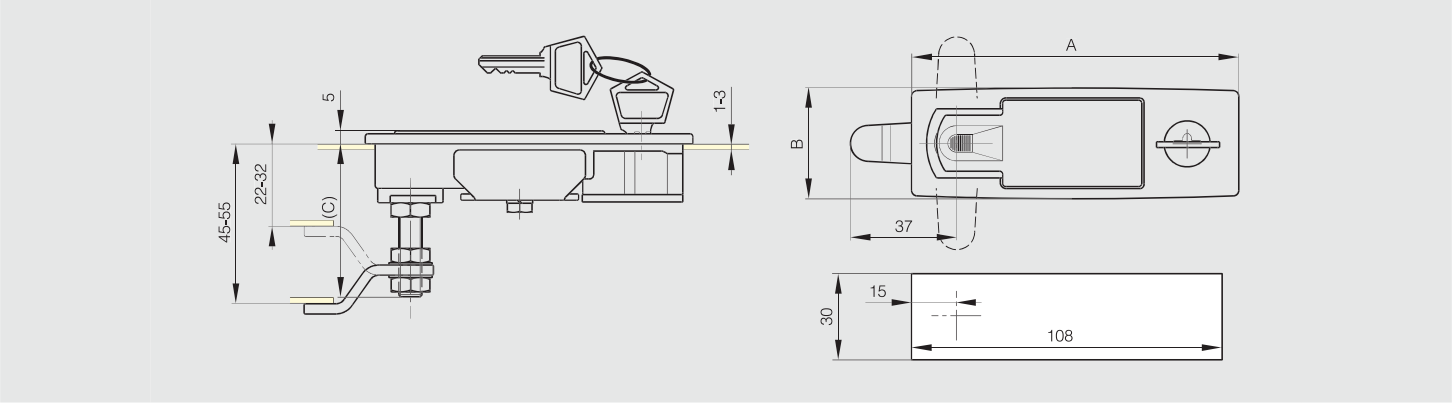

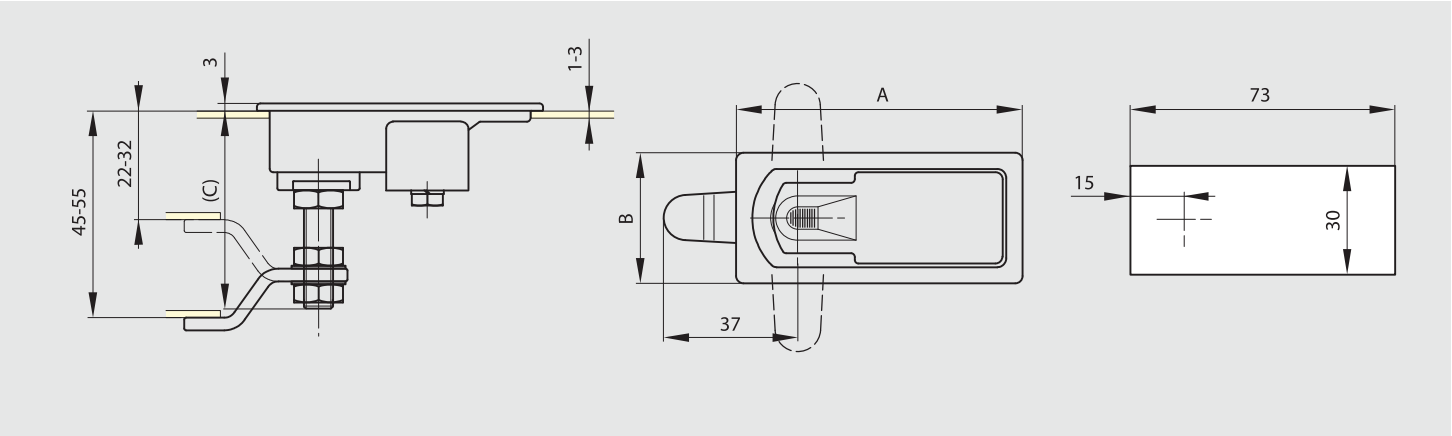

Compression latches

Lockable compression latch

ZAMAK RoHS

Ease of mounting. Keyed alike (one key number).
Body: zinc die-cast.
Bracket and screw: zinc plated steel.

Part number	Material	Finish	A	B	C	Weight (g)
16-1-9018	zinc die-cast	black	110	50	31-48	420

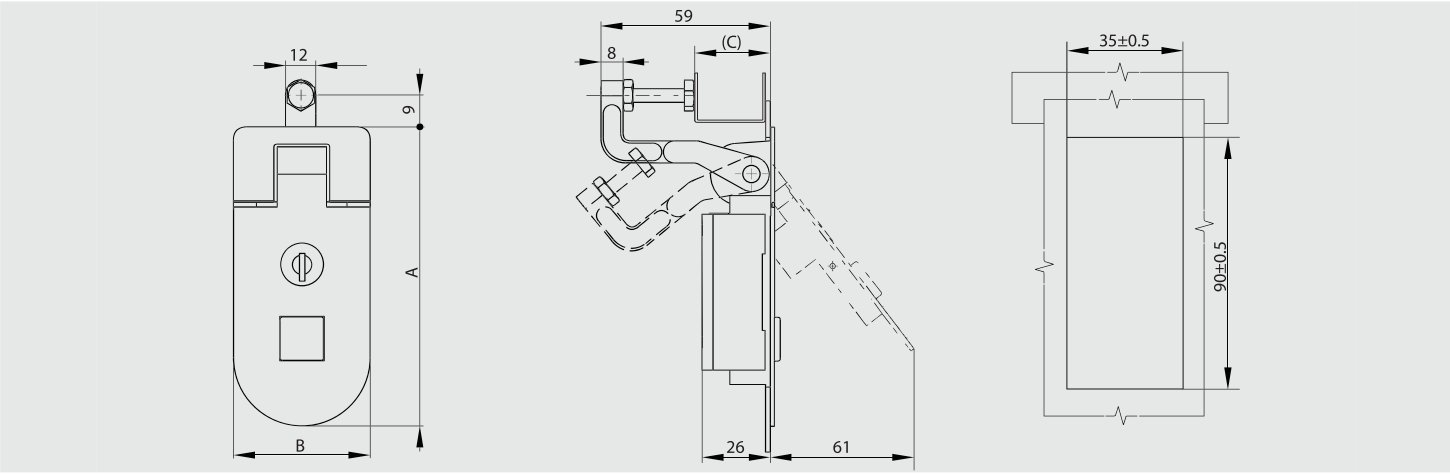

Flush compression latch with or without key

ZAMAK RoHS

Ease of mounting.
Latch dimensions and cut-out dimensions are the same for the 2 products (with or without cylinder).
For version with cylinder: keyed alike (one key number).
Body: zinc die-cast.
Bracket and screw: zinc plated steel.

Part number	Material	Finish	A	B	C	Note	Weight (g)
16-1-9010	zinc die-cast	black	106	42	1-35	with key	269
16-1-9023	zinc die-cast	black	106	42	1-35	without key	245

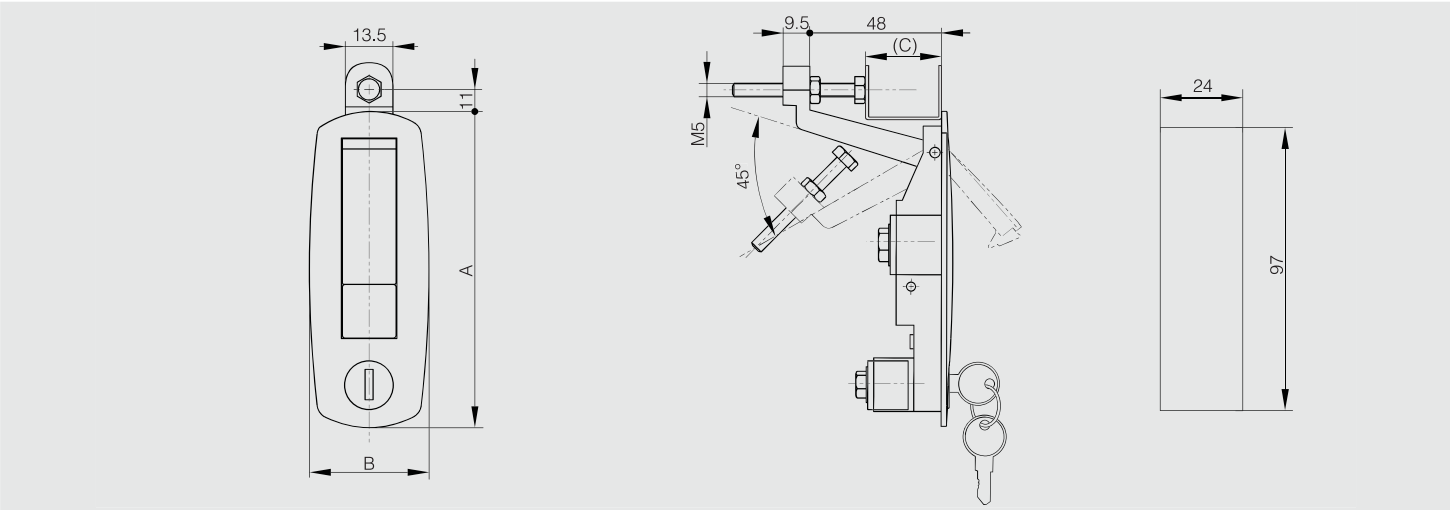

Vector T-handle - stud mounted

IP65 POLYMER ZAMAK RoHS

IP 65 rated.
Handle rotation 90° right, 90° left.
Material: Body: Glass fiber reinforced polyamide (PA6).
Handle: zinc die-cast black powder coated/ Shaft: zinc die-cast.
Cam: zinc die-cast or zinc plated steel/ Roller: Glass fiber reinforced polyamide (PA6).
Other key numbers and cams are available on request.

Part number	Material	Finish	A	B	Note	Weight (g)
16-7-4153	polyamide and zinc die-cast	black	131	120	1 point cam (H58)	450
16-7-4154	polyamide and zinc die-cast	black	131	120	adjustable 1 point cam (H10-60)	490

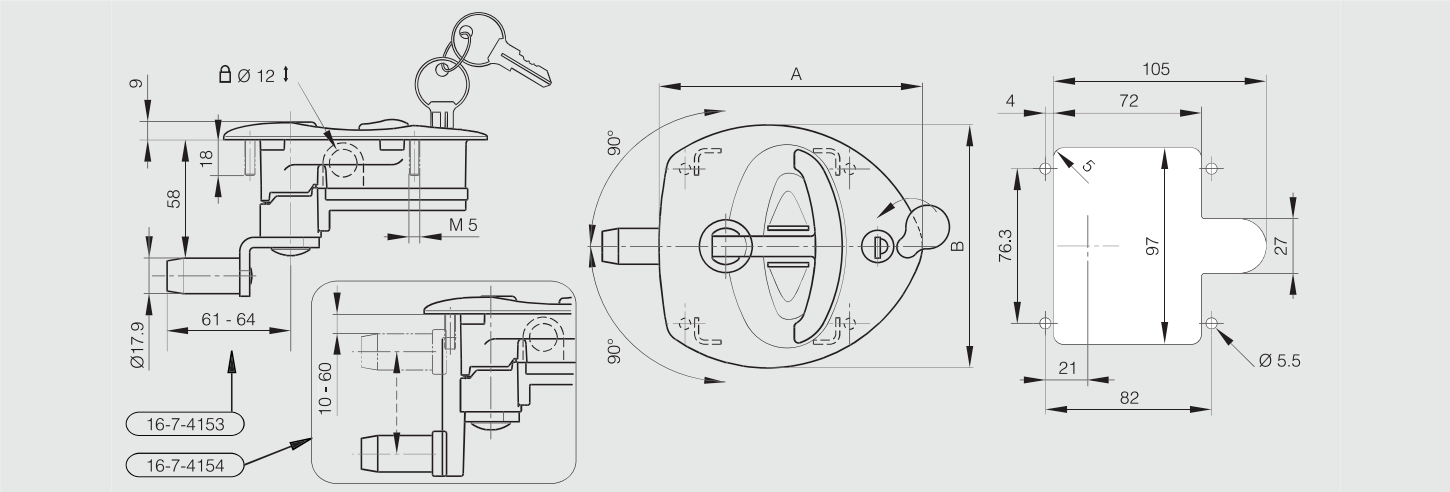

Vector T-handle - screw mounted

POLYMER ZAMAK RoHS

Handle rotation 90° right, 90° left.
Outline flat gasket reference 27-7-3912.
Material : Body : Glass fiber reinforced polyamide (PA6).
Handle : zinc die-cast black powder coated.
Shaft : zinc die-cast.
Cam : zinc die-cast or zinc plated steel.
Roller : Glass fiber reinforced polyamide (PA6).
Other key numbers and cams are available on request.

Part number	Material	Finish	A	B	Note	Weight (g)
16-7-4151	polyamide and zinc die-cast	black	131	120	1 point cam (H58)	410
16-7-4152	polyamide and zinc die-cast	black	131	120	adjustable 1 point cam (H10-60)	460

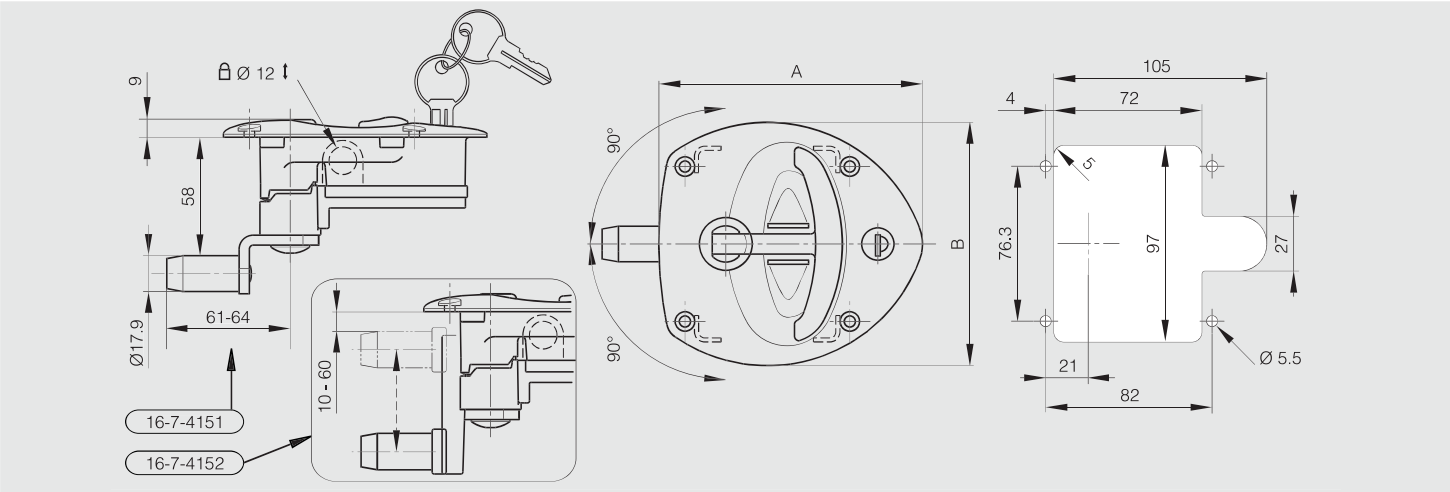

Vector 2 T-handle with mounting bracket - chrome plated with fixed cam

IP65 POLYMER ZAMAK RoHS

The mounting bracket provides a quick, easy and reliable mounting.
Flush T-handle with a 4 mm compression stroke.
Handle rotation 90° right, 90° left.
Equipped with integrated PUR-gasket, protection degree IP65.
Comes with a keyed alike locking-cylinder with folding stainless steel dust shutter.
Material : body: PA / T-shaped handle: zinc die cast, black / Cam: steel, zinc plated / Mounting bracket: steel, zinc plated / Cast-in bolt : steel, zinc plated.
Other key numbers and cams are available on request.

Part number	Material	Finish	A	B	Note	Weight (g)
16-7-4310	polyamide and zinc die-cast	chrome plated	149	139	1 point cam (H48)	570

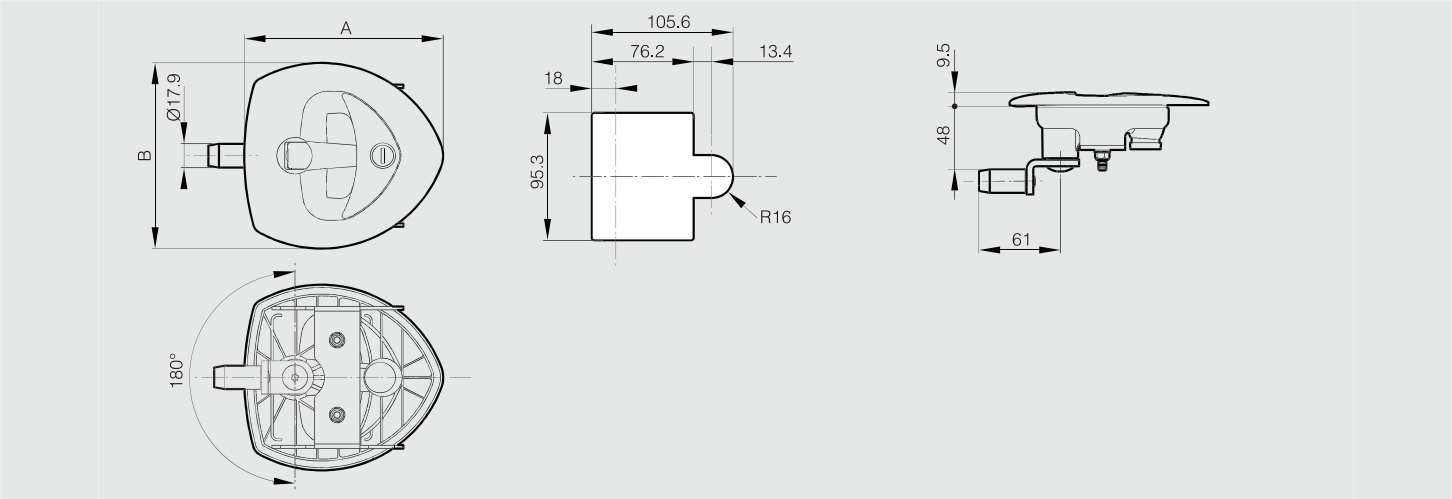

Vector 2 T-handle with mounting bracket - black version with adjustable cam

IP65 POLYMER ZAMAK RoHS

The mounting bracket provides a quick, easy and reliable mounting.
Flush T-handle with a 4 mm compression stroke.
Handle rotation 90° right, 90° left.
Equipped with integrated PUR-gasket, protection degree IP65.
Comes with a keyed alike locking-cylinder with folding stainless steel dust shutter.
Material : body and roller cam: PA / T-shaped handle: zinc die cast, black / Adjsutable cam: zinc die cast, passivated / Mounting bracket: steel, zinc plated / Cast-in bolt : steel, zinc plated.
Other key numbers and cams are available on request.

Part number	Material	Finish	A	B	Note	Weight (g)
16-7-4291	polyamide and zinc die-cast	black	149	139	adjustable 1 point cam (H17-52)	620

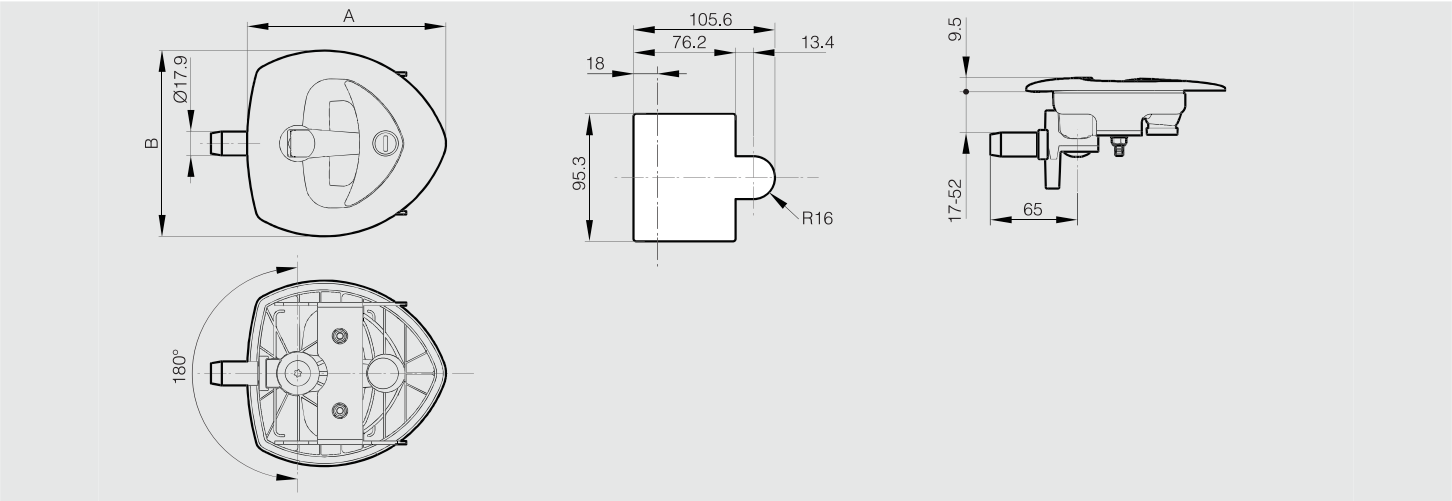

Clip'n Turn - Clip-on quarter turn with slotted shape

POLYMER RoHS

This part number includes a body (POM) and clip (PA).
3 cam heights available. Straight cam for heights H=18 and H=25.
Cranked cam for height H=13.5 (as shown below).
Product in white color: on demand.
This quarter turn can be mounted on door thicknesses up to:
- 4 mm with part numbers 16-1-8002, 16-1-8004 and 16-1-8009.
- 6 mm with part number 16-1-8006.
Clip can be ordered separately with part number 16-1-8007 (dimension 36x30mm).
Patented.

Part number	Material	Finish	H	Weight (g)
16-1-8002	POM / PA	black	13.5	14
16-1-8004	POM / PA	black	18	14
16-1-8009	POM / PA	white	18	14
16-1-8006	POM / PA	black	25	14

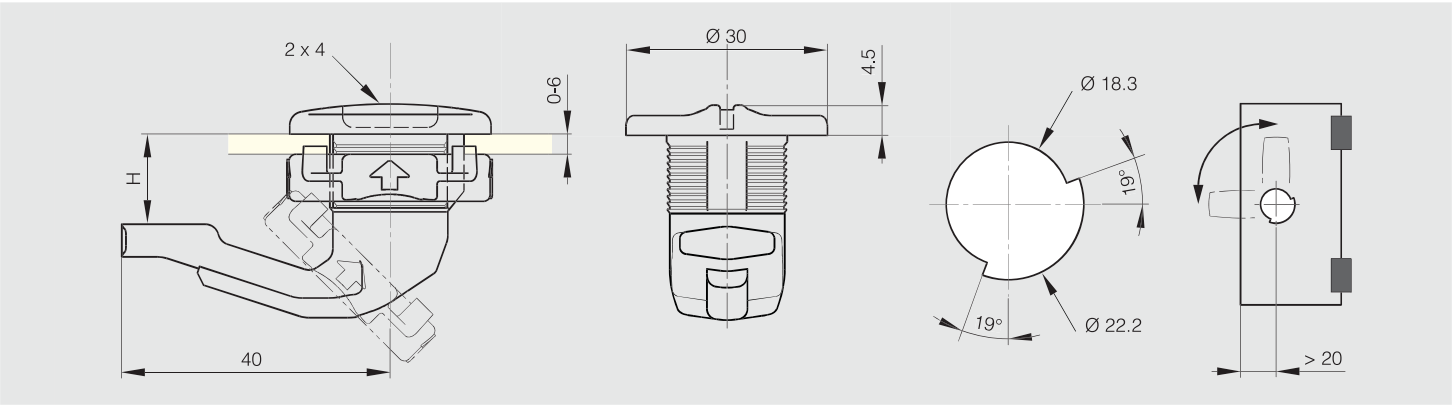

Clip'n Turn - Clip-on quarter turn with wing head

POLYMER RoHS

This part number includes a body (POM) and a clip (PA).
3 cam heights available. Straight cam for heights H=18 and H=25 (as shown on the drawing).
Cranked cam for height H=13.5.
Product in white color: on demand.
This quarter turn can be mounted on door thicknesses up to:
- 4mm with part numbers 16-1-8001, 16-1-8003 and 16-1-8008.
- 6mm with part number 16-1-8005.
Clip can be ordered separately with part number 16-1-8007 (dimension 36x30mm).
Patented.

Part number	Material	Finish	H	Weight (g)
16-1-8001	POM / PA	black	13.5	14
16-1-8003	POM / PA	black	18	14
16-1-8008	POM / PA	white	18	14
16-1-8005	POM / PA	black	25	14

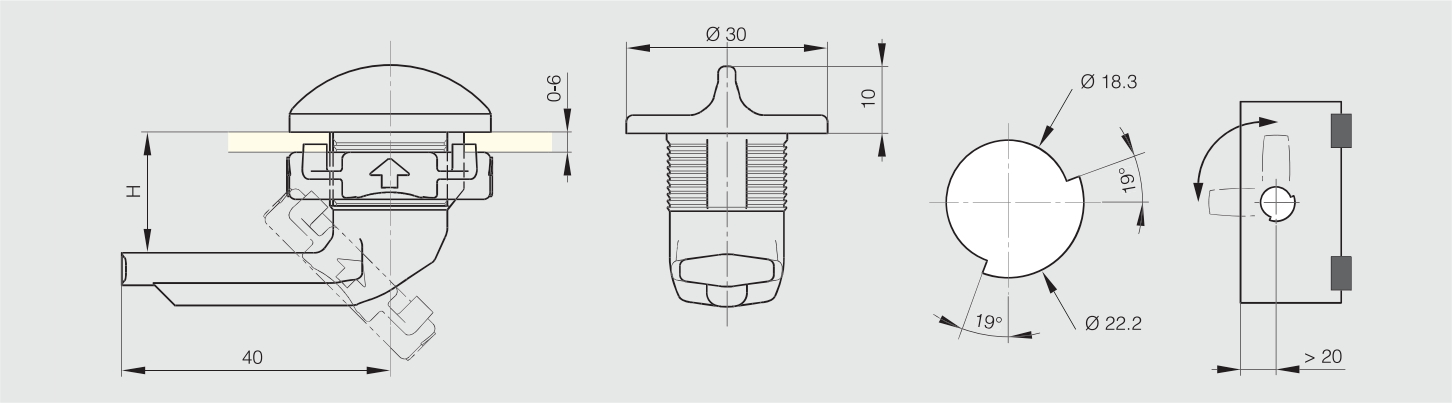

Quarter turn with wing knob

POLYMER ZAMAK STEEL RoHS

16-1-4226: key 455 E, supplied with 2 keys.

2 cams available (sold separately):
16-1-4227: flat cam (H18 L35).
16-1-4229: cranked cam (H11 L50). Same came can be used upside down for H25.

Cut-out: 19.5 x 23.1 mm.
Door thickness: max. 12.5 mm.

Material: wing knob in black PA, housing in zinc die-cast, key / cylinder / cam in steel, nut in brass.

Part number	Material	Finish	H	L	Note	Weight (g)
16-1-4226	zinc die-cast and PA	black			key 455 E	96
16-1-4227	steel	zinc plated	18	35		15
16-1-4229	steel	zinc plated	11	50	cranked cam	24

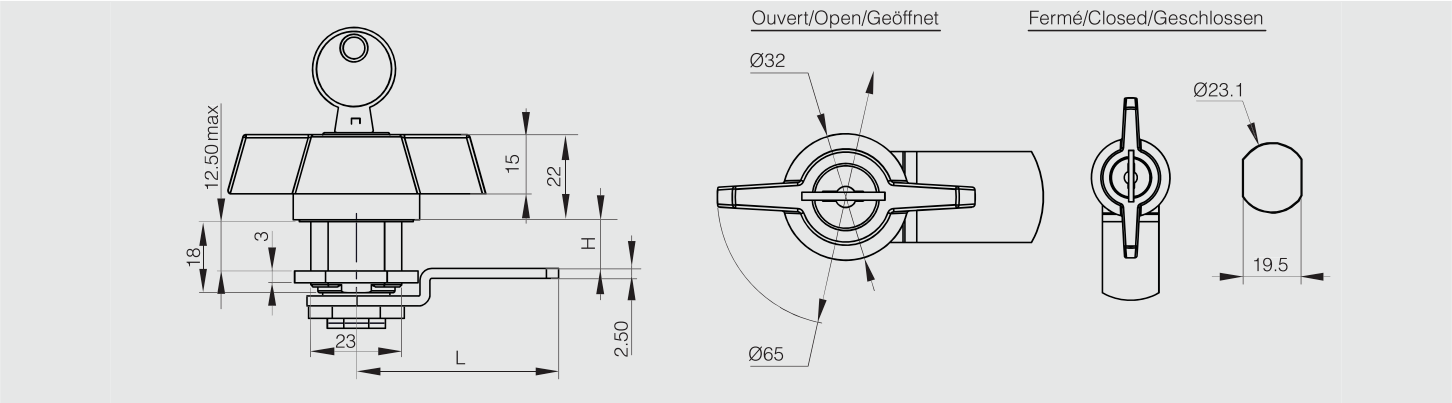

Latch

STEEL RoHS

Stainless steel spring

Part number	Material	Finish	A	B	H	S	Weight (g)
16-1-3266	steel	zinc plated	44	21	34	4.5	59

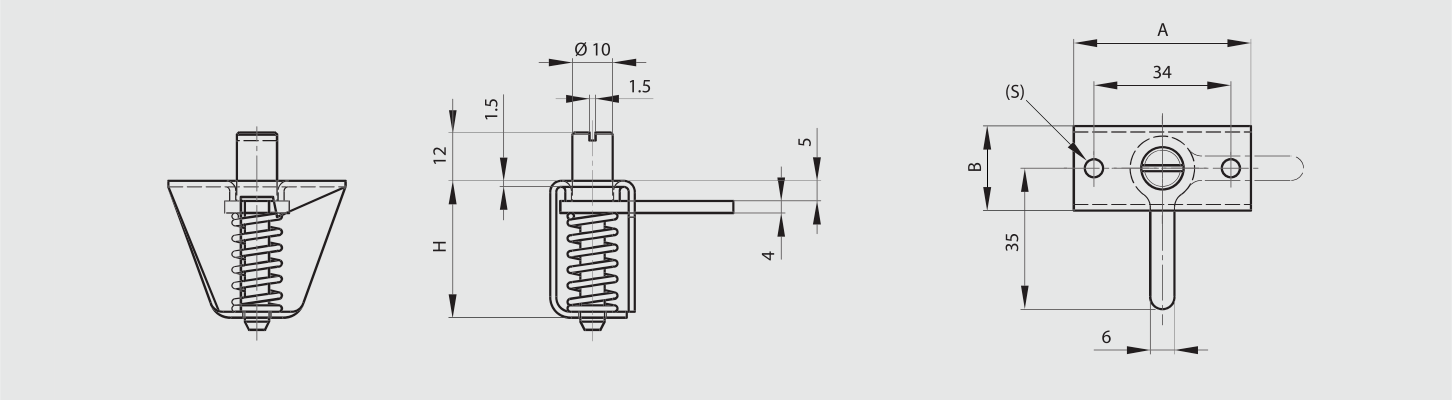

Lockable flush pop-out T-handle

ZAMAK RoHS

2 keyed alike included, no cam.
Flush T-handle. When the cylinder is opened, the handle pops out and can be turned.

Part number	Material	Finish	A	B	Weight (g)
16-7-4071	zinc die-cast	chrome plated	89.6	33.8	248

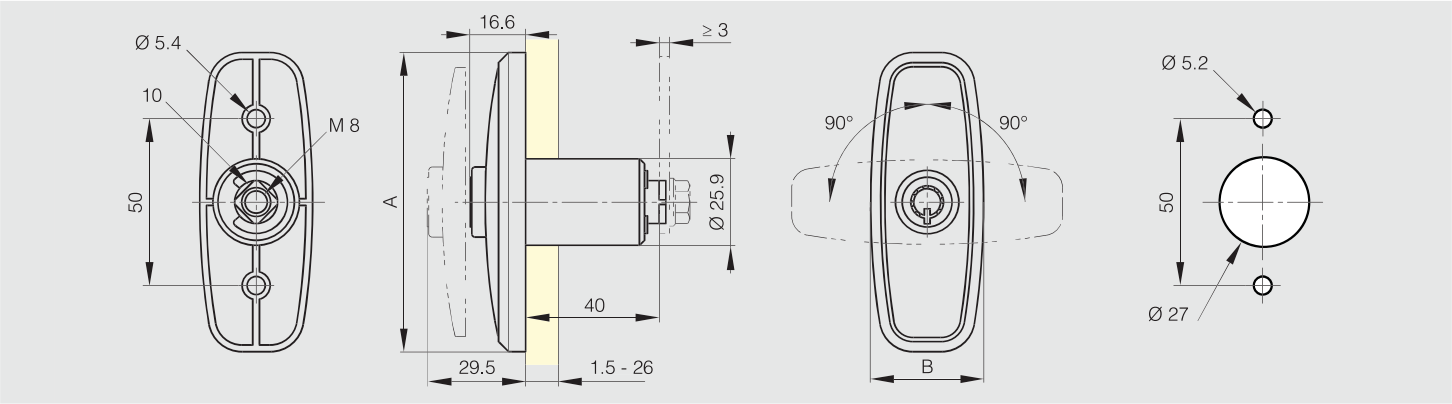

Cylinder lock

ZAMAK RoHS

Quarter-turn cylinder lock for maximum door thickness of 40 mm. Supplied with 2 keyed alike.
Not handed. Cam to be ordered separately.

Part number	Material	Finish	H	Weight (g)
16-7-4063	zinc die-cast	chrome plated	56.5	138

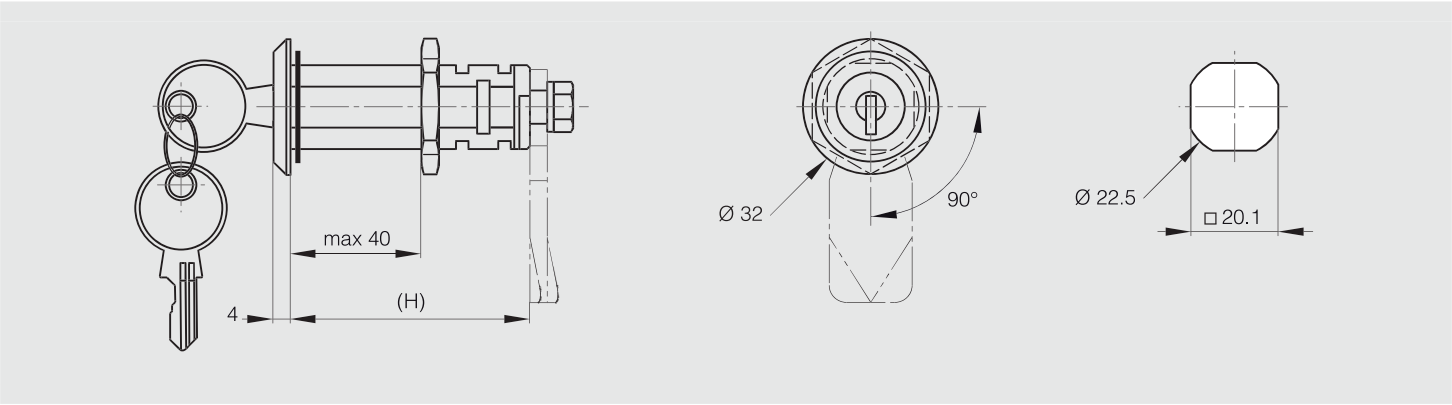

Budget latches - square 4x4

STEEL

Part number	Material	Finish	A	B	C	D	E	F	G	H	S	W	Weight (g)
16-7-3288	steel	zinc plated	75	14.5	7	3	2.5	20	61	14.5	3.6	90°	33
16-7-3289	steel	zinc plated	85	16.5	7.7	3.5	3	23	67	16	3.6	90°	45

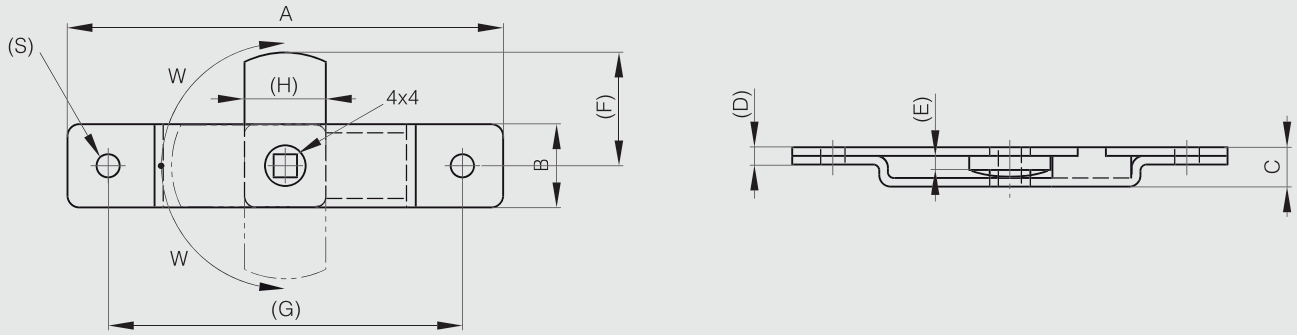

Budget latch - square 6x6 - stainless steel

STAINLESS STEEL RoHS

Not handed.

Part number	Material	Finish	A	B	C	W	Weight (g)
16-1-3972	304 stainless steel	raw	85	17	8.5	90°	56

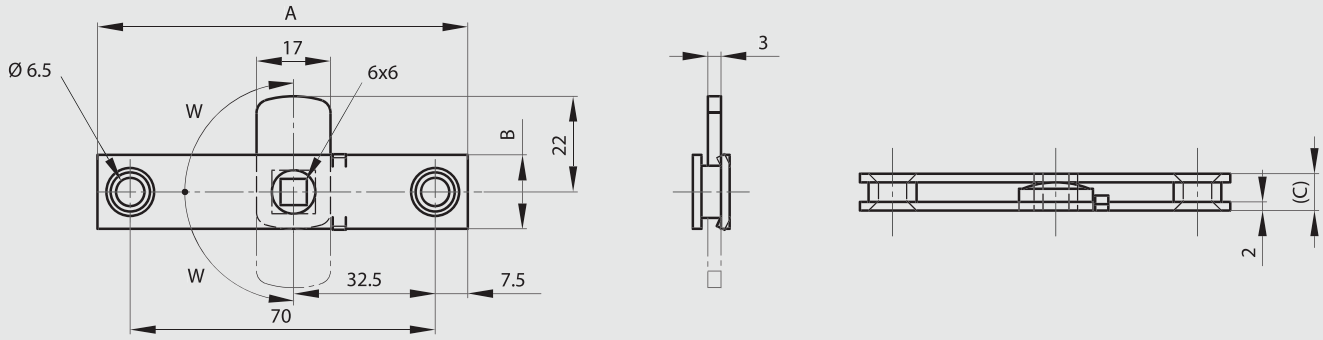

Spring budget latch

Not handed.

Part number	Material	Finish	A	B	C	Note	Weight (g)
16-1-4031	304 stainless steel	deburred	85	53.4	8.5	Budget latch (no strike)	69

Strike for spring budget latch 16-1-4031

Part number	Material	Finish	A	B	C	Note	Weight (g)
16-1-4032	304 stainless steel	deburred	85	17	8.5	strike	48

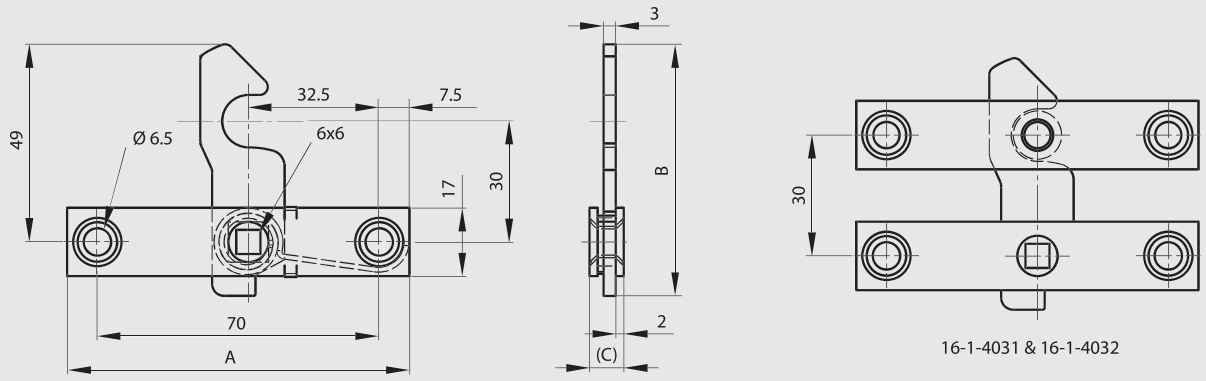

Budget latches - square 8x8

Not handed. 3 indent positions.

STAINLESS STEEL

Part number	Material	Finish	A	B	C	W	Weight (g)
16-1-4085	steel	zinc plated	80	19	8	90°	63
16-1-4086	304 stainless steel	raw	80	19	8	90°	63

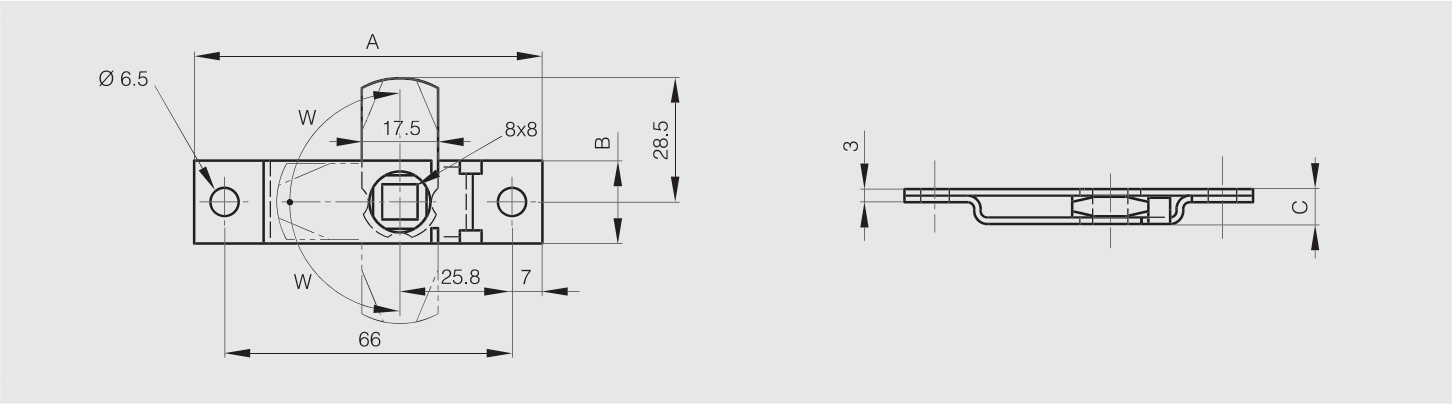

Plastic budget latch with strike plate

Not handed.

POLYMER RoHS

Part number	Material	Finish	A	B	C	W	Weight (g)
16-7-4012	acetal resin	black	83	22	14	90°	32

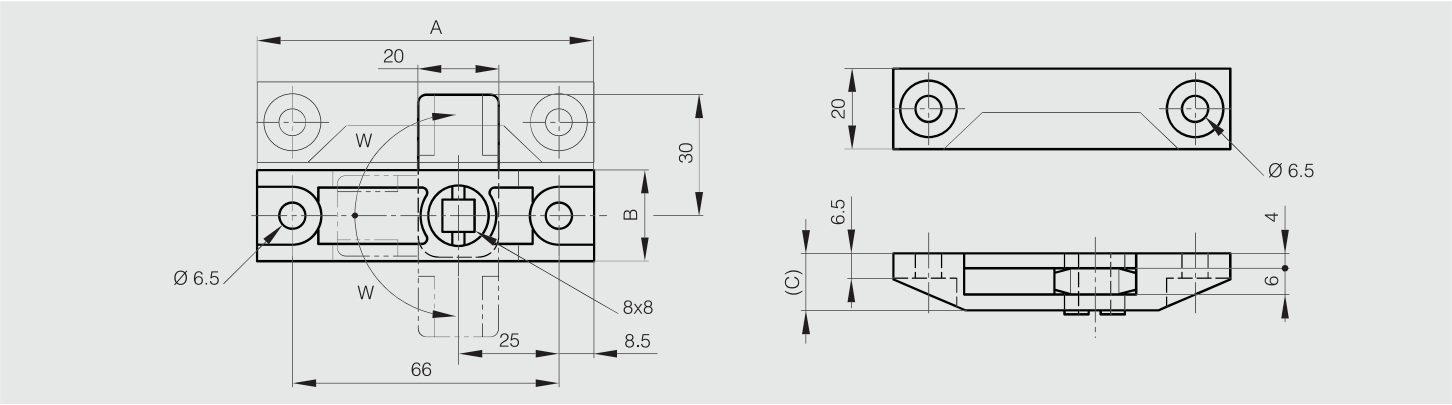

Heavy duty budget latch - square 8x8

NEW

STAINLESS STEEL RoHS

Not handed. 3 indent positions.

	Part number	Material	Finish	A	B	C	W	Weight (g)
NEW	16-1-4330	304 stainless steel	raw	115	35	11	90°	160

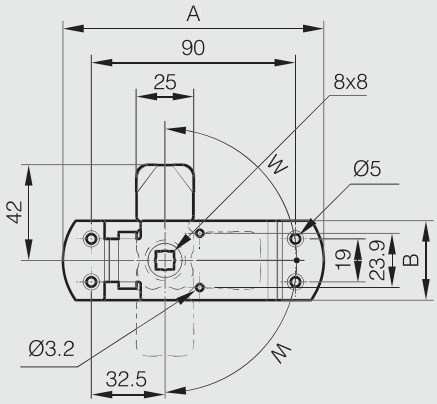

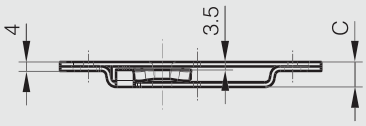

Common key for budget latches

STEEL

Part number	Material	Finish	A	B	Weight (g)
16-1-4083	steel	zinc plated	93	63.5	58

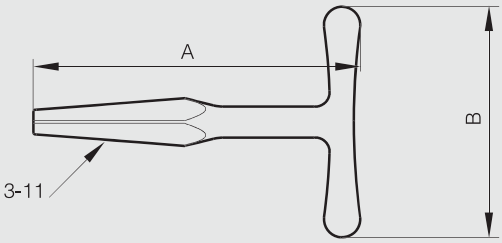

Barrel bolt in aluminium - small dimension

NEW

ALU RoHS

Body: clear anodised aluminium.
Shaft and handle: raw aluminium.
Shaft lenght when closed: 10 mm.

	Part number	Material	Finish	A	B	C	Weight (g)
NEW	16-1-4315	alu 6060 T5	clear anodised	30	22.5	18.2	11

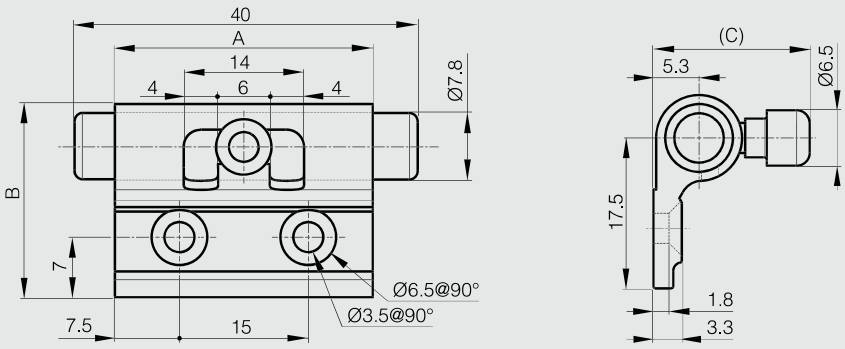

Barrel bolt in aluminium

ALU RoHS

Body: clear anodised aluminium.
Shaft and handle: raw aluminium.
Shaft lenght when closed: 15 mm.
No strike included (strike part number 16-1-4323).

Part number	Material	Finish	A	B	C	Weight (g)
16-1-4311	6060 T5 alu	clear anodised	60	36.5	34	65

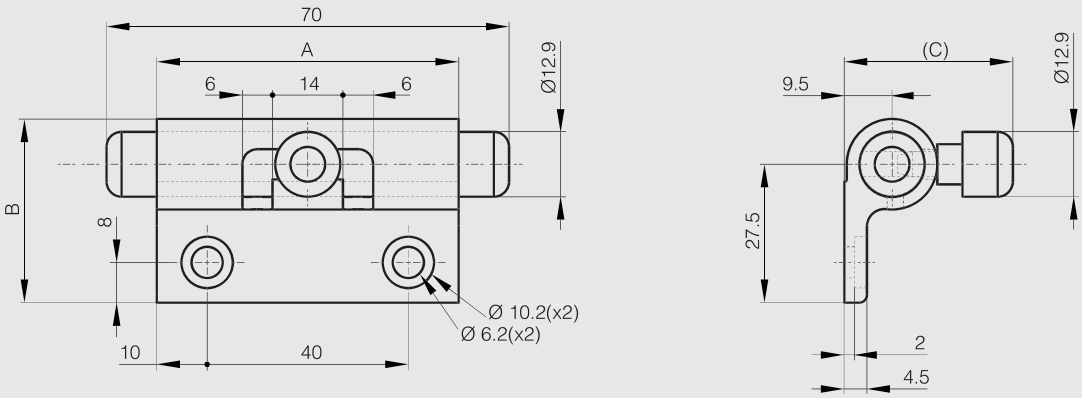

Barrel bolt in stainless steel

STAINLESS STEEL

Can be fixed in vertical or horizontal position (stop when locked).
Supplied with 2 different strikes (see drawing).

Part number	Material	Finish	A	B	C	Weight (g)
16-7-3863	304 stainless steel	satin	50	37	27	80

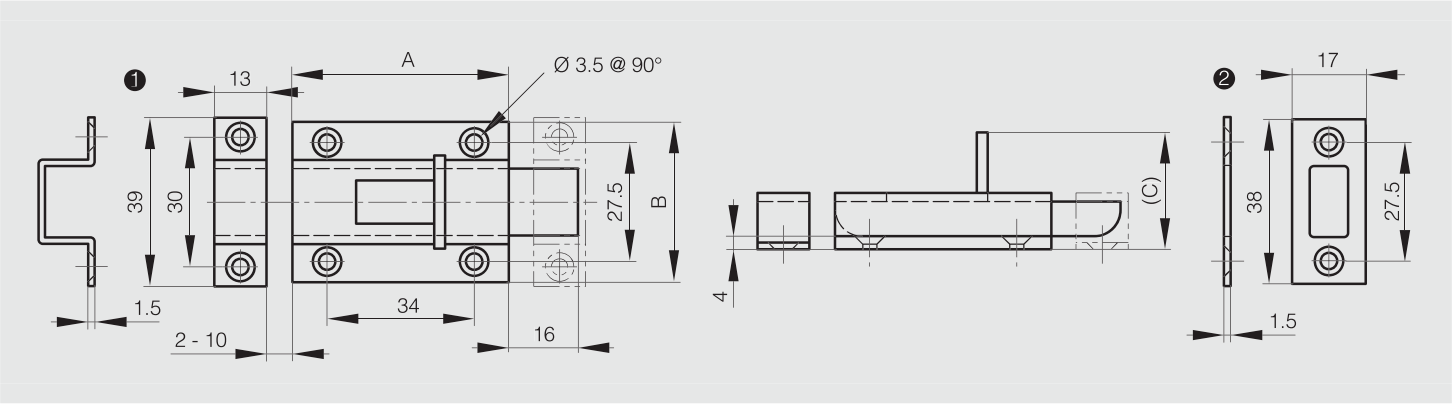

Barrel bolt in brass

BRASS RoHS

Part number	Material	Finish	A	B	Weight (g)
16-7-3681	brass	chrome plated	40	30	66
16-7-3680	brass	polished	40	30	66

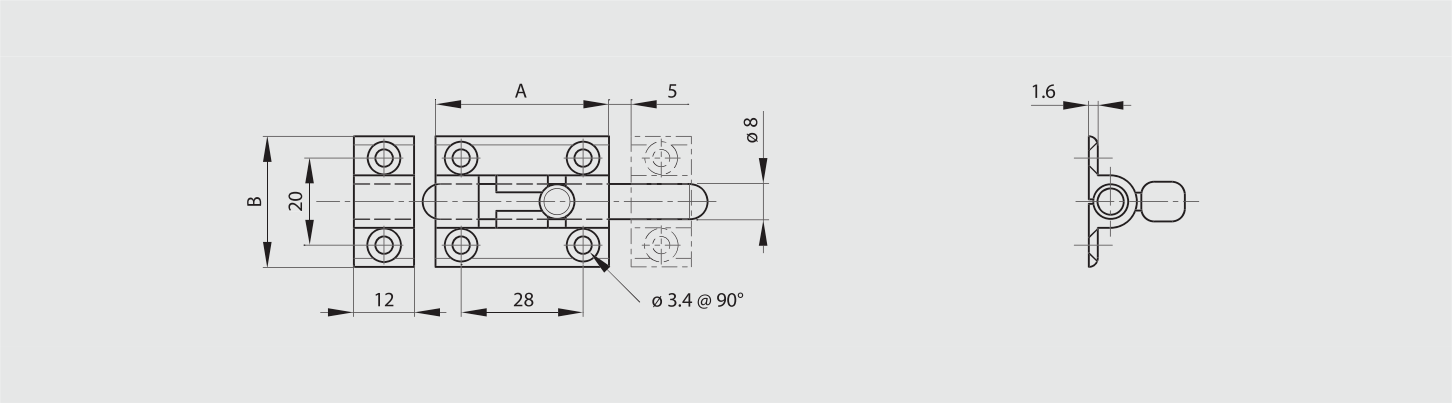

Chrome plated brass hasp

BRASS RoHS

304 stainless steel pin.
Same shape available for hinge 72-7-3725.

Part number	Material	Finish	A	B	C	D	S	Weight (g)
72-7-3726	brass	chrome plated	30	98	3	4	4.3	55

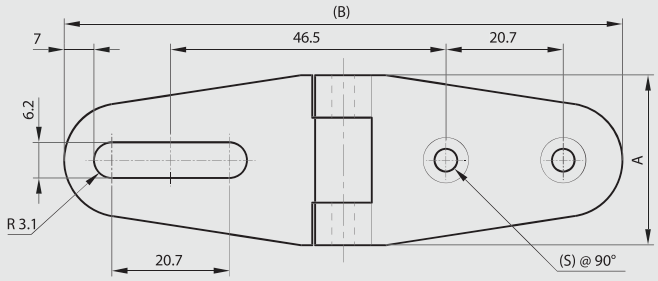

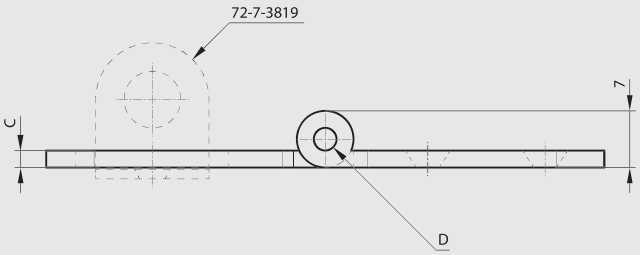

Catch plate for part number 72-7-3726

BRASS RoHS

Part number	Material	Finish	A	B	C	S	Weight (g)
72-7-3819	brass	chrome plated	35	20	3	4	16

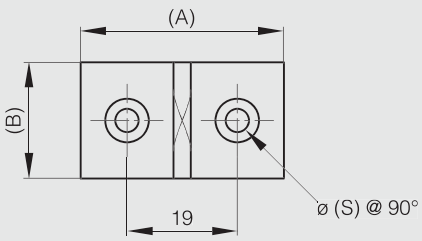

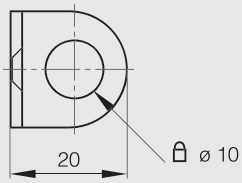

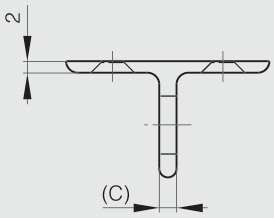

Dual ball catches A

ZAMAK RoHS

Coutersunk on both sides of the catch.
Strike can be secured on 4 sides of the catch.
Body of the catch: zinc die-cast with brass finish.
Balls: in steel
Strike: in steel with brass finish.

Part number	Material	Finish	A	B	C	D	E	F	G	H	J	K	L	S1	S2	Weight (g)
16-7-3469	zinc die-cast	brass	49.9	11.4	12.6	30	3	40	20.2	30.5	8.1	17	1.4	4.3	4	22
16-7-3470	zinc die-cast	brass	60	14.6	14.7	38	3	48	27	42	10.2	20	2	4.2	5	38
16-7-3471	zinc die-cast	brass	70	17.3	16.5	43.6	3.5	57	34	50	12	22.5	2	4.3	3.5	59

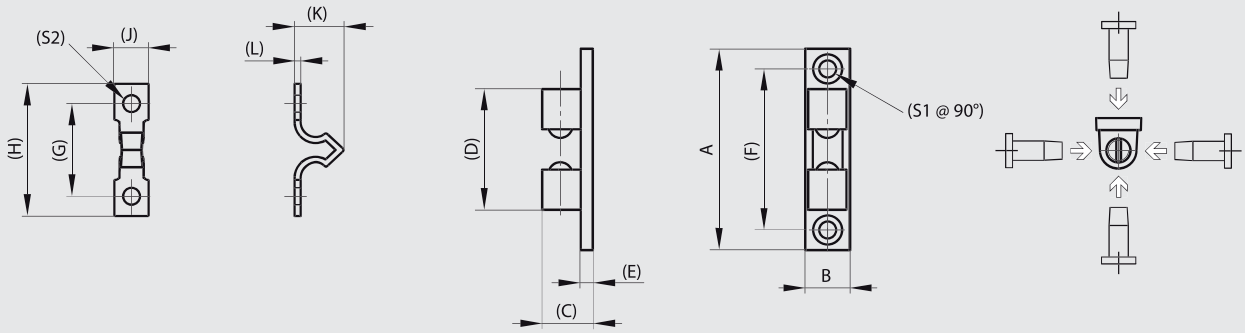

Dual ball catches B

ZAMAK RoHS

Strike can be secured on 2 sides of the catch.
Body of the catch: zinc die-cast with brass finish.
Balls: in steel
Strike: in steel with brass finish.

Part number	Material	Finish	A	B	C	D	E	F	G	H	J	K	L	S1	S2	Weight (g)
16-7-3423	zinc die-cast	brass	41.7	8.5	10.7	26	2.6	34	16.9	25.7	8	13.5	1.2	3.5	3	14

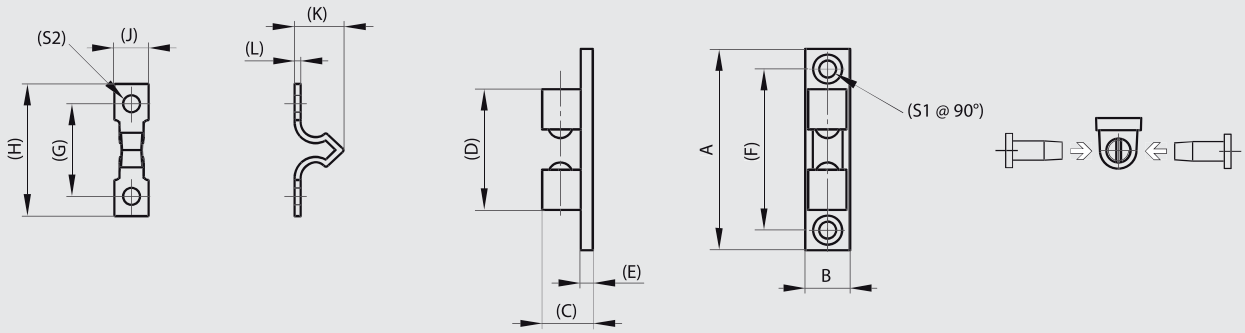

Stainless steel dual ball catches

Catch force is not adjustable. Do not turn the slot part.

STAINLESS STEEL RoHS

Part number	Material	Finish	A	B	C	C1	C2	D	E	F	G	H	J	K	L	S	Force	Weight (g)
16-7-4305	316 stainless steel	polished	43	8	13.5	10	6	28.4	2.5	35	16	25	7.5	11	2.5	3.2	1.3kg	18
16-7-4306	316 stainless steel	polished	50	10	16.1	12.2	7.7	31.5	2.9	40	20	30	9	13.2	2.9	4.2	1.8kg	30
16-7-4307	316 stainless steel	polished	70	13	23	17	10.5	51	4	60	30	42	10.5	19	4	4.2	3.9kg	83

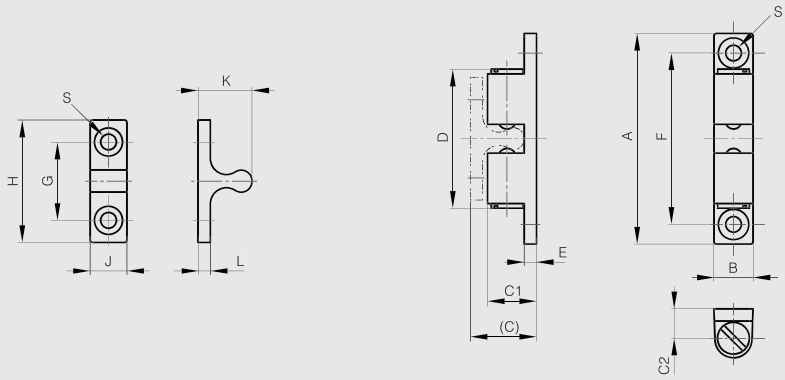

Zinc die-cast dual ball catches

Body: zinc die-cast, chrome plated.
Balls: steel.

ZAMAK

Part number	Material	Finish	A	B	C	C1	C2	D	E	F	G	H	J	K	L	S	Force	Weight (g)
16-7-4211	zinc die-cast	chrome plated	42.5	8	14	10	6.5	26.7	2.5	35	16	25	7.5	11.3	2.5	3.2	3kg	16
16-7-4212	zinc die-cast	chrome plated	50	10	16	12.5	7.4	29.8	3	40	20	30	9	12.3	2.5	4.2	3.3kg	26
16-7-4213	zinc die-cast	chrome plated	70	13.5	21.2	17	11	49	4	60	30	42	10.5	17.2	3	4.2	3.5kg	70

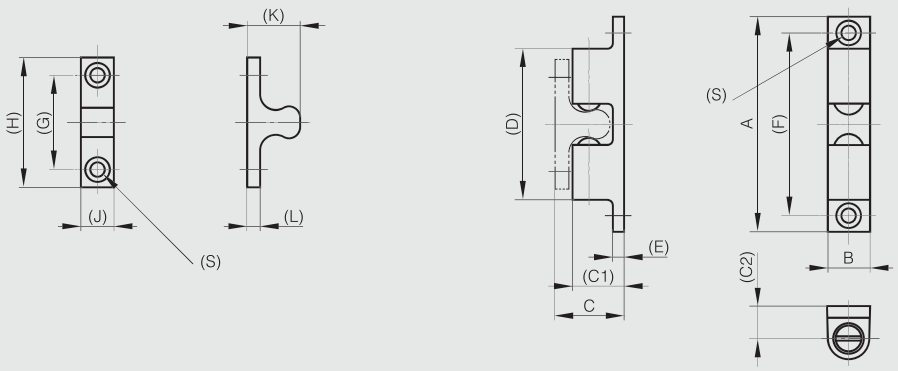

Ball catches

BRASS RoHS

Part number	Material	Finish	A	B	C	D	E	F	Weight (g)
16-7-3330	brass	raw	8	7.4	4.5	6.5	9	16	4
16-7-3331	brass	raw	10	8.5	6.5	8	11	16	7
16-7-3332	brass	raw	12	9	7	10	13	19.5	10
16-7-3333	brass	raw	13	10.5	7.2	10	14	19.5	14

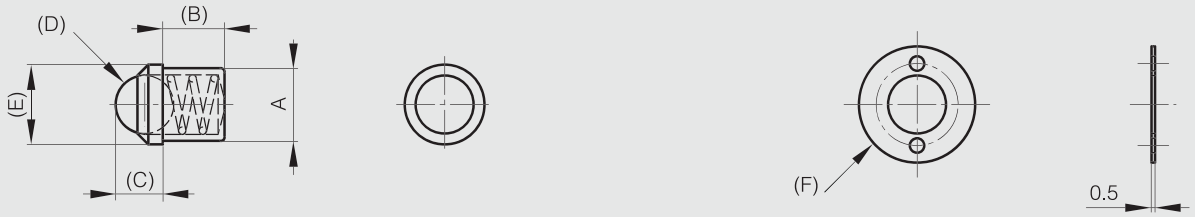

Roller catch without counterplate

Rubber rollers. Housing in ABS. Shaft in brass.

POLYMER RoHS

Part number	Material	Finish	A	B	Force	Weight (g)
16-1-3594	polymer	white	53	14	1.5kg maxi	9

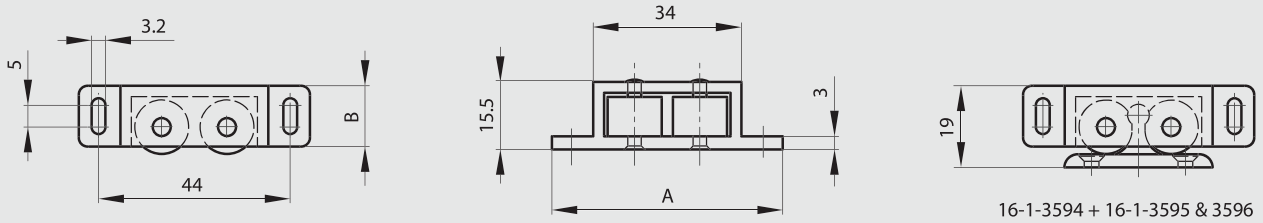

Counterplates for part number 16-1-3594

Strike in ABS.

POLYMER RoHS

Part number	Material	Finish	A	B	Note	Weight (g)
16-1-3595	polymer	white	34	10	with pin	2
16-1-3596	polymer	white	34	10	without pin	2

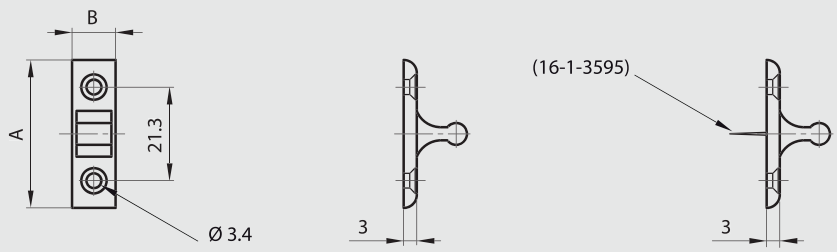

Catch

Nylon hook, rubber damper.

STEEL

Part number	Material	Finish	A	B	Force	Weight (g)
16-1-3271	steel	zinc plated	97	39	8kg	100

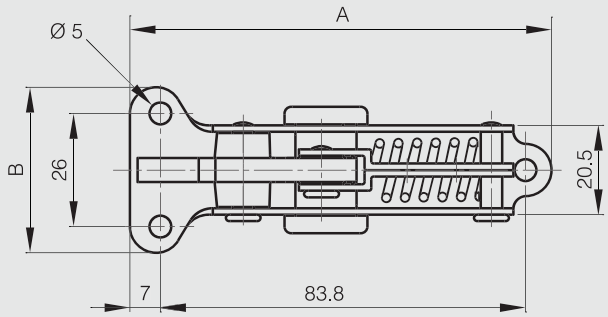

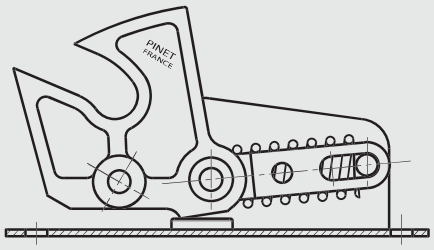

Counterplate for part number 16-1-3271

Nylon roller.

STEEL RoHS

Part number	Material	Finish	A	B	Weight (g)
16-1-3272	steel	chrome plated	62	22	41

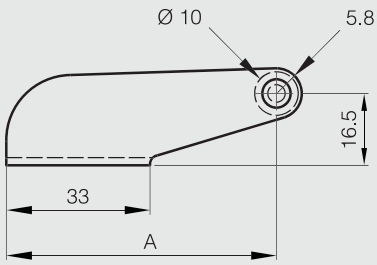

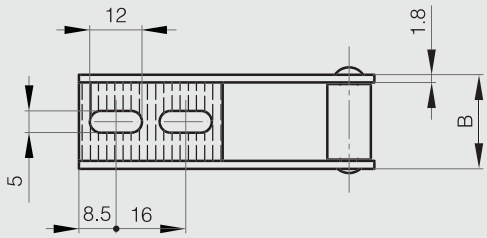

Touch latch in steel

POLYMER STEEL RoHS

Part number	Material	Finish	A	C	Weight (g)
16-7-3838	steel	nickel plated and white plastic	33	11	20

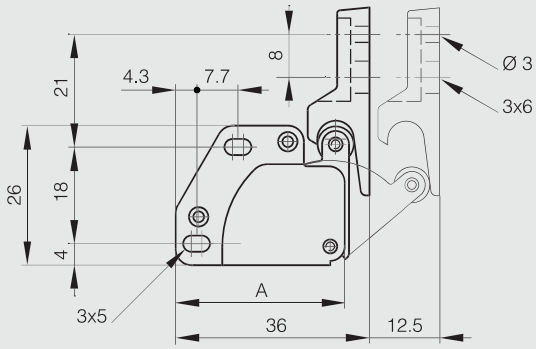

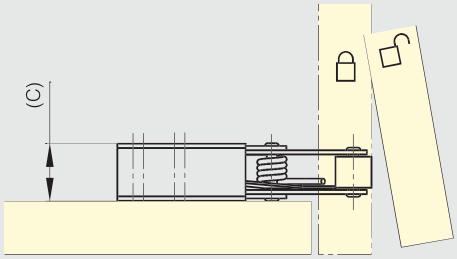

Touch latch with steel strike

POLYMER RoHS

Body in ABS.
Chrome plated strike and hook in black steel.

Part number	Material	Finish	A	B	C	Force	Weight (g)
16-7-4210	polymer	black	43	26.5	17.8	10kg	16

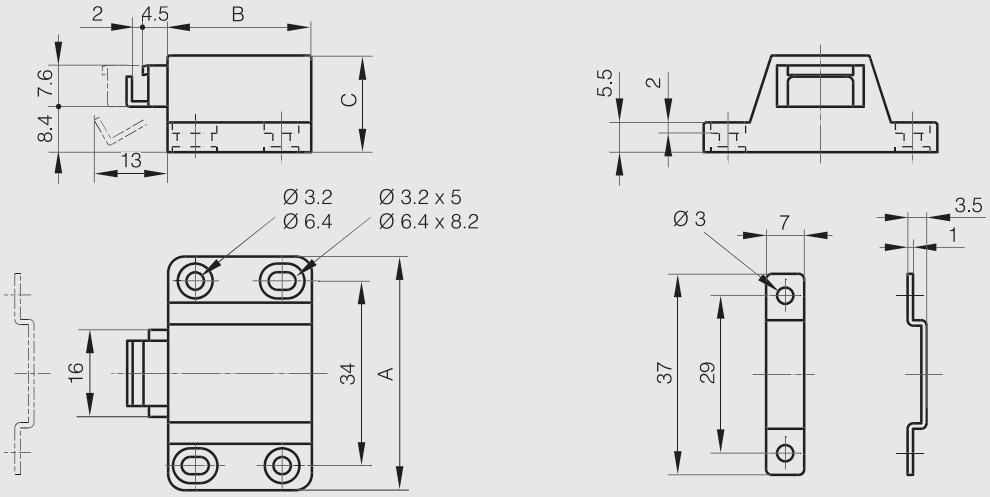

Mini touch latch - snap-in installation

POLYMER RoHS

Miniature design is ideal for small applications.
Snap-in style catch. For sheet metal thickness 2 mm.
Strike sold separately.

Part number	Material	Finish	A	B	C	Force	Weight (g)
16-7-4302	POM/PA	black	20	10.9	7	1.2kg	0.7

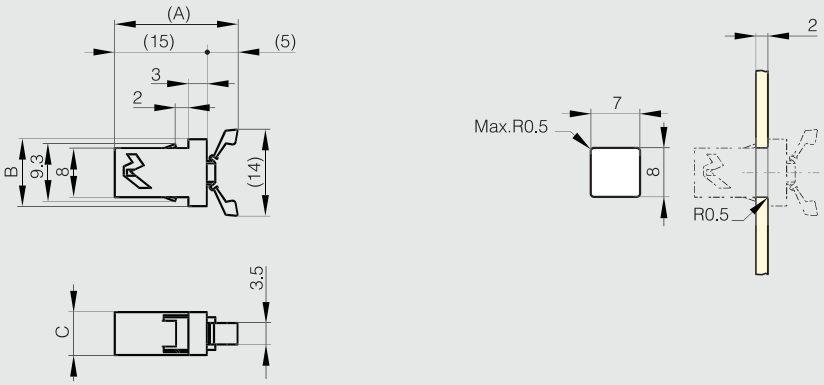

Snap-in counter plate for part number 16-7-4302

POLYMER RoHS

Part number	Material	Finish	Weight (g)
16-7-4304	POM	black	0.5

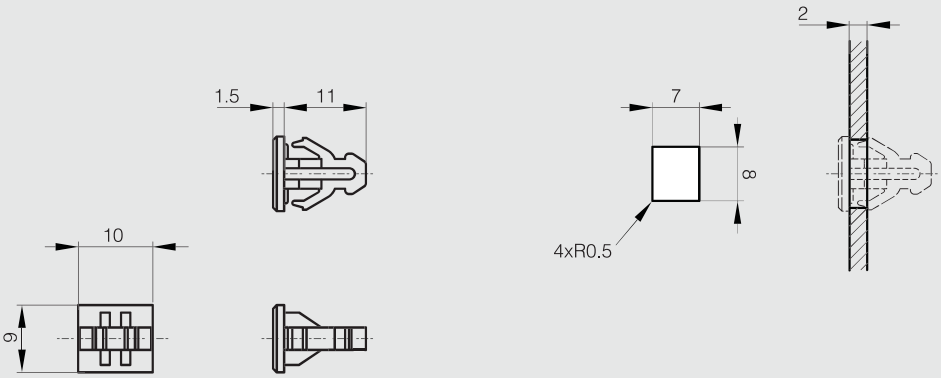

Screw mount counter plate for part number 16-7-4302

Part number	Material	Finish	Weight (g)
16-7-4303	POM	black	0.4

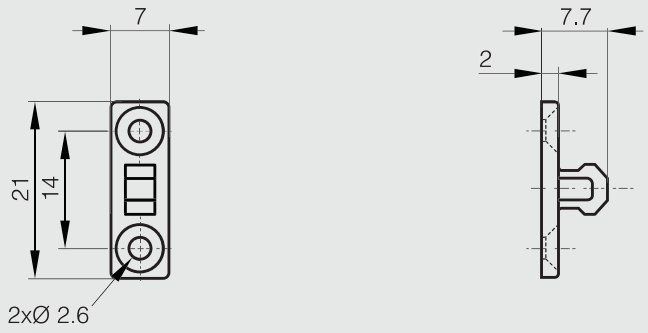

Touch latch - Snap-in installation

Compact design with strong retaining force (3.5 kg).
Snap-in style catch. For sheet metal thickness 2 mm.
Strike sold separately.
Polymer material: PBT, PA and PCL.

Part number	Material	Finish	A	B	C	Force	Weight (g)
16-7-4300	polymer	black	27.3	14	9.8	3.5kg	2

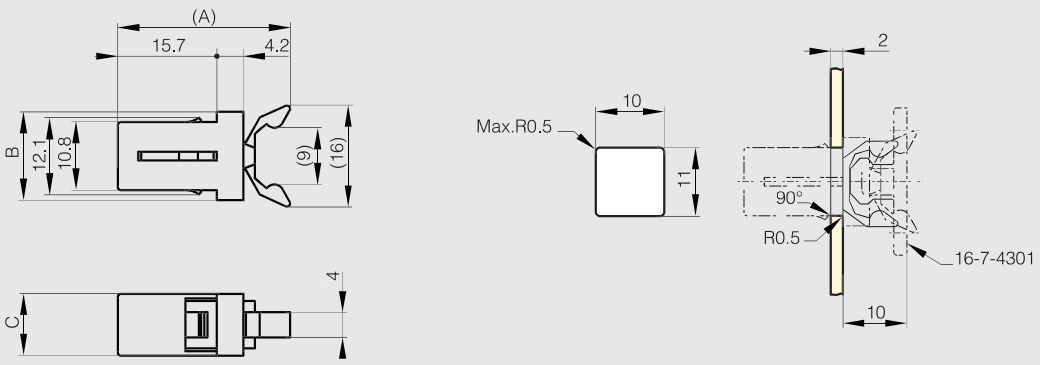

Counter plate for part number 16-7-4300

POLYMER RoHS

Part number	Material	Finish	A	B	C	Weight (g)
16-7-4301	POM	black	23	7	2	1

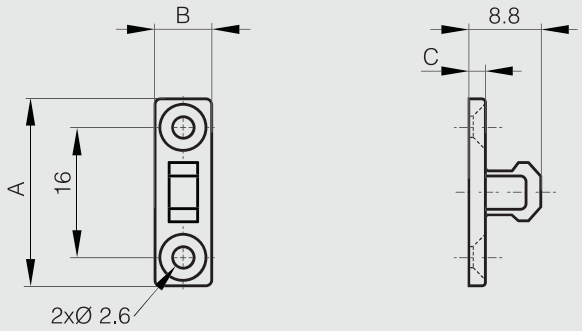

Touch latch - Screw mounting - With counter plate

POLYMER RoHS

Passed 30,000 open/close cycle test.
Touch latch with floating strike allows for easy alignment.
For overlay door, allow 3 mm gap between door and cabinet frame for push space.
Pulling door with excessive force without unlatching the unit may damage the mechanism.

Latch: ABS/POM.
Counter plate: PA.
Comes with screws.

Part number	Material	Finish	A	B	C	Force	Weight (g)
16-7-4299	polymer	black	37	36.3	13.2	3kg	15

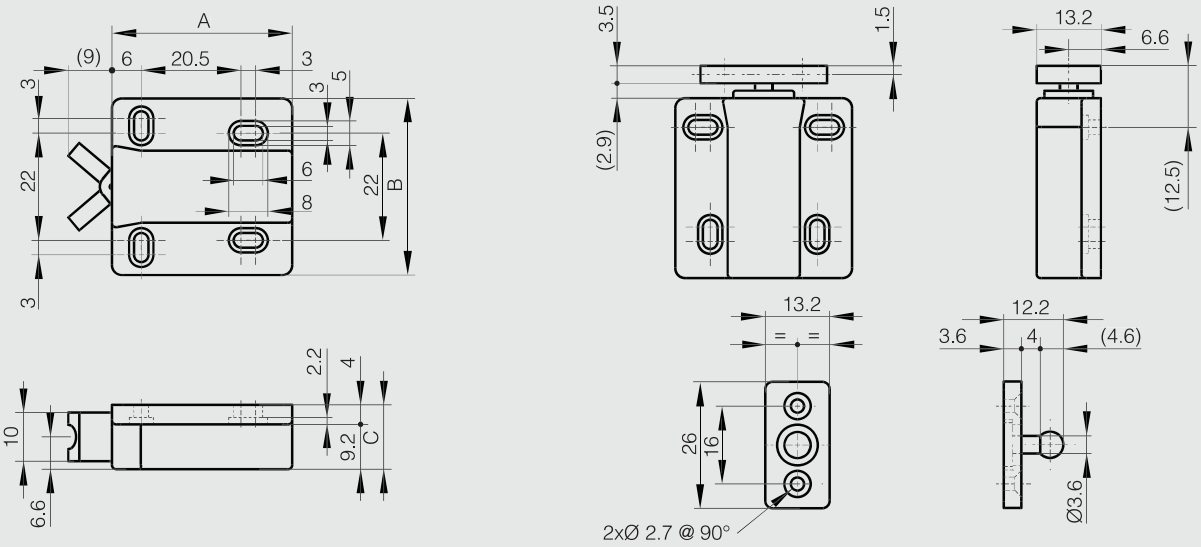

Touch latch - Screw mounting - Strong retaining force

POLYMER RoHS

Passed 100,000 open/close cycle test.
Strong retaining force: 8 kg.
Floating counter plate for easy alignment.
For overlay door, allow 3 mm gap between door and cabinet frame for push space.
Pulling the door with excessive force without unlatching the unit may damage the mechanism.

Latch: ABS/POM.
Counter plate: PA.
Comes with screws.

Part number	Material	Finish	A	B	C	Force	Weight (g)
16-7-4298	polymer	black	71	40	16	8kg	24

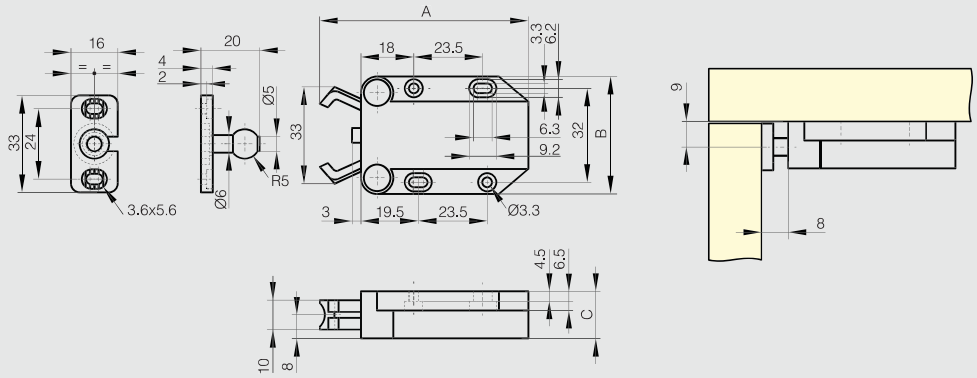

Magnetic touch latch

NEW

POLYMER RoHS

Lightly push to open the door.
When closing, magnet will catch the door by lightly pushing.

For overlay doors, make a 3.5mm gap between door and cabinet frame.

Body: ABS
Counter plate and yoke: steel zinc chromate

Included:
- Counter plate
- 4 round head wood screws 3.1 x 13 mm
- 1 countersunk head screw 2.7 x 13 mm.

	Part number	Material	Finish	A	B	C	Force	Weight (g)
NEW	16-7-4331	ABS	white	43.5	36	15	1.6 kg	22

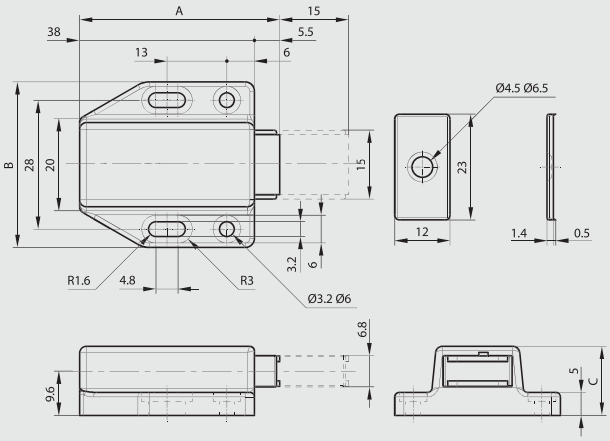

Snap-in knuckle catch in plastic

POLYMER RoHS

Snap-in type body for easy installation on sheet metal applications.
3 panel thicknesses (E): 0.8 mm, 1.0 mm and 1.2 mm
Cut-out dimensions vary depending on panel thickness.
Internal catch body tolerance of 1.5 mm for ease of alignment.
Push-in force: 2.0 kg.
Pulling force: 2.0 kg.
Body in polyacetal (POM) and strike in polyamide (PA).

Part number	Material	Finish	A	B	C	Force	Weight (g)
16-7-4214	polymer	white	43	21.2	10	2kg	5

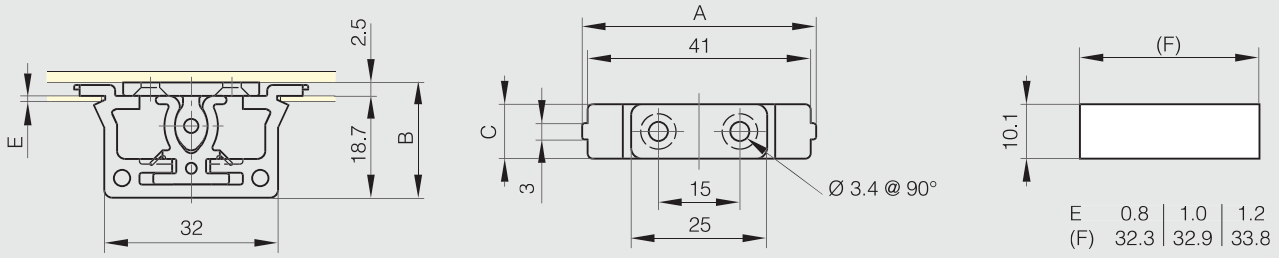

Plastic catch

POLYMER

Push in force : 5.7 kg
Pulling force : 7.1 kg
Body in polyacetal (POM) and strike in polyamide (PA).

Part number	Material	Finish	A	B	C	Force	Weight (g)
16-7-3860	polymer	white	35.4	30.5	13	7.1kg	5

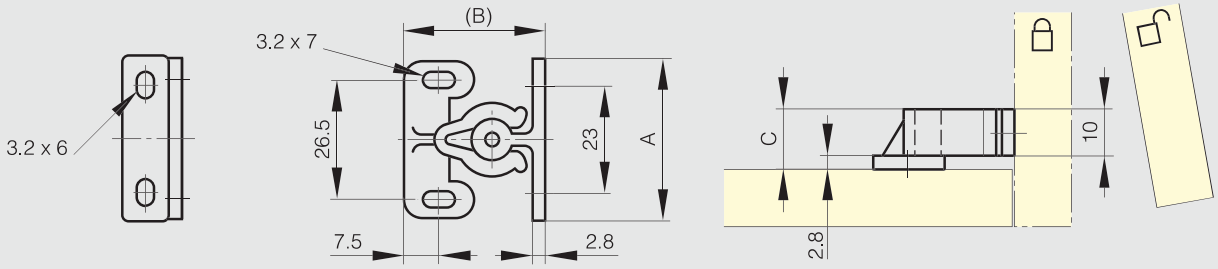

Sealed compact magnetic catch

This part number is associated with counterplate 16-7-4205.

Part number	Material	Finish	A	B	Force	Weight (g)
16-7-4204	polymer	white	45	17	3kg	9

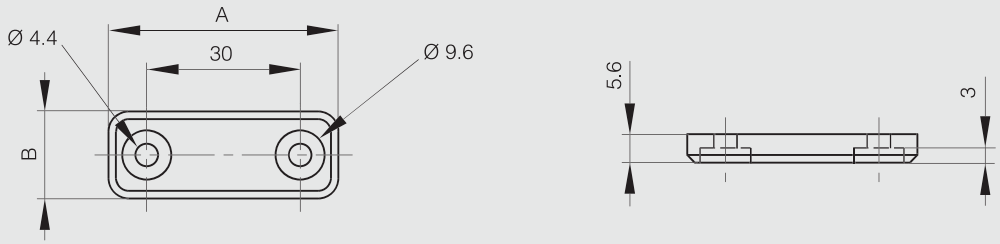

Counterplate for sealed magnetic catch 16-7-4204

This counterplate has the same dimensions as the part listed above. It has a blue dot on the backside to diffenrentiate it from the catch.

Part number	Material	Finish	A	B	Weight (g)
16-7-4205	polymer	white	45	17	9

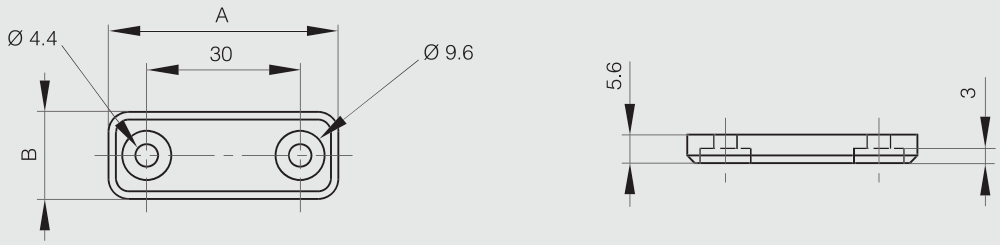

Sealed magnetic catch

Strike sold separately.

POLYMER RoHS

Part number	Material	Finish	A	B	C	D	Force	Weight (g)
16-7-4081	polymer	white	50	21	13	40	3kg	21
16-7-4206	polymer	black	50	21	13	40	3kg	21

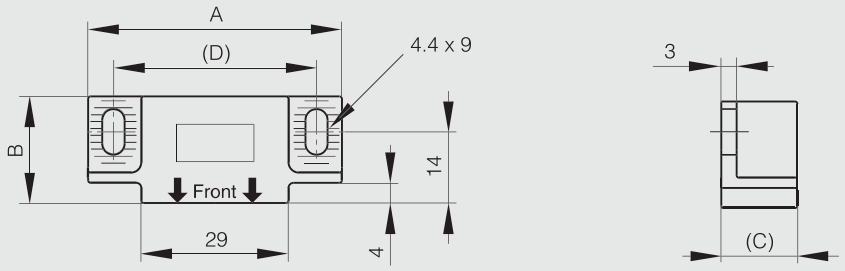

Counterplate for sealed magnetic catch 16-7-4081 and 16-7-4206

STAINLESS STEEL RoHS

Part number	Material	Finish	A	B	C	D	Weight (g)
16-7-4082	430 Ti stainless steel	raw	49	15	2	40	10

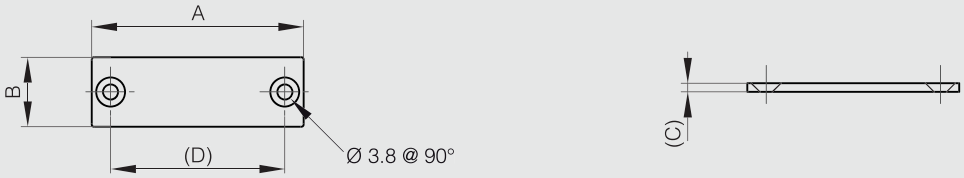

Ultra thin compact magnetic catch

STEEL RoHS

Suitable for temperatures below 80°C.
To avoid breakage, counterplate should not contact the magnet.
Screw heads should not protude above the base plate.

Part number	Material	Finish	A	B	Force	Weight (g)
16-7-4033	steel	nickel plated	35	12	2.7kg	4

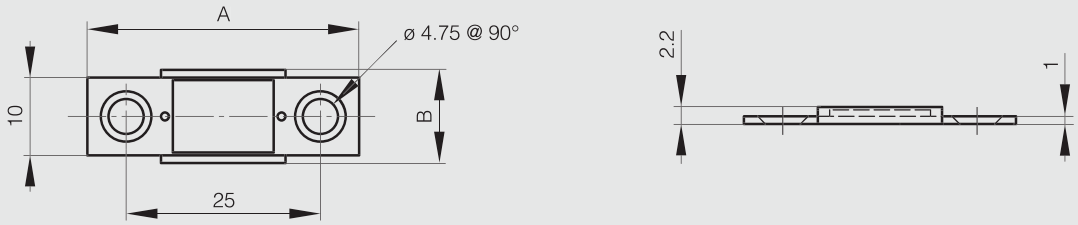

Compact magnetic catch

STAINLESS STEEL STEEL RoHS

Suitable for temperatures below 80°C.
To avoid breakage, counterplate should not contact the magnet.
Screw heads should not protude above the base plate.
For stainless steel version, magnet is coated with acrylic resin to be corrosion resistant.

Part number	Material	Finish	A	B	C	Force	Weight (g)
16-7-4207	steel	nickel plated	41	16.5	2.6	4kg	12
16-7-4308	steel	nickel plated	41	16.5	3.0	8kg	14
16-7-4309	430 stainless steel	polished	41	16.5	2.8	5kg	13

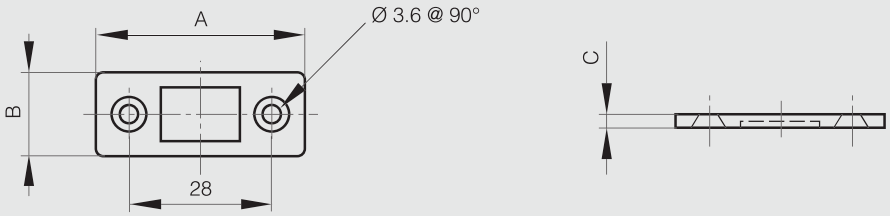

Low profile magnetic catch

POLYMER

Part number	Material	Finish	A	B	C	D	E	F	G	L	Force	Weight (g)
16-7-4254	ABS	black	43	17	6	34	17	24	13	25	1kg	14
16-7-4255	ABS	black	53	23.5	6.2	44	23	34	20	35	3kg	32
16-7-4256	ABS	black	64	24.5	7	55	24	45	30	46	5kg	48

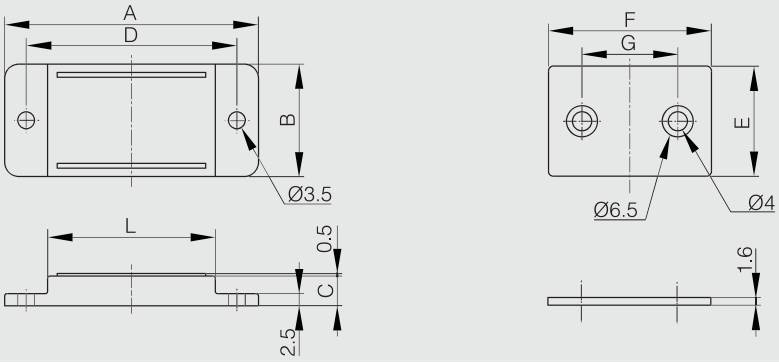

Mini screw-on magnetic catch with counter plate - force 3 kg

POLYMER RoHS

Mini magnetic catch is ideal for tight spaces.
Materials: PBT (polymer), steel, neodymium.
Counter plate: steel.
Comes with 4 screws.

Part number	Material	Finish	A	B	C	D	E	F	G	Force	Weight (g)
16-7-4293	polymer	white	34	12	6	25	11	30	20	3kg	13

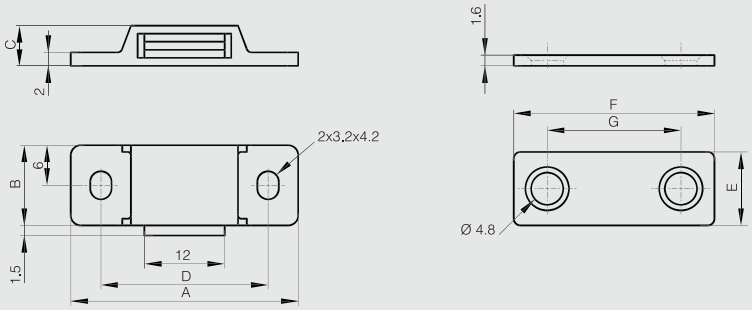

Screw-on magnetic catch with counterplate - force 3 kg

POLYMER RoHS

Part number	Material	Finish	A	B	C	Force	Weight (g)
16-7-3492	polypropylene	white	39.8	13.7	11.7	2 à 3kg	17

Screw-on magnetic catch without counterplate - force 4 kg

POLYMER RoHS

Part number	Material	Finish	A	B	C	D	Force	Weight (g)
16-7-3390	polymer	white	48	15	19.2	38	4kg	13

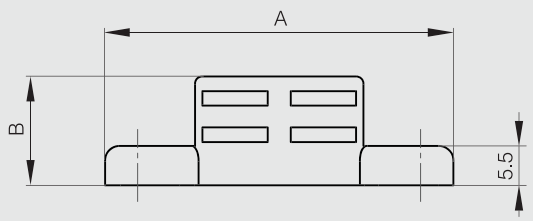

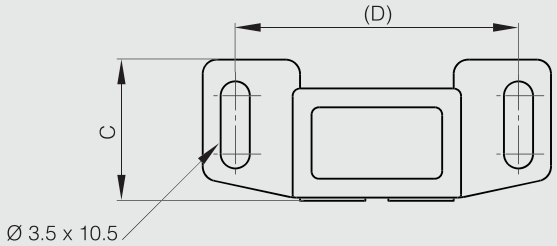

Counter plate for magnetic catch 16-7-3390

STEEL RoHS

Part number	Material	Finish	A	B	C	D	Weight (g)
16-7-3351	steel	zinc plated	41	14	1.5	31	6

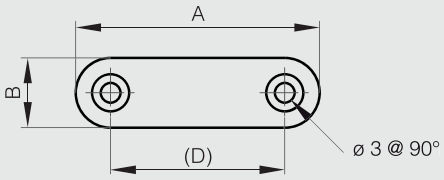

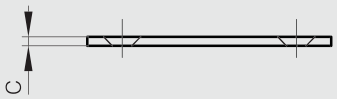

Screw-on magnetic catches with counterplate - force 4 kg

POLYMER RoHS

Part number	Material	Finish	A	B	C	D	Force	Weight (g)
16-7-4278	ABS	white	48	15.5	13	37.5	4kg	22

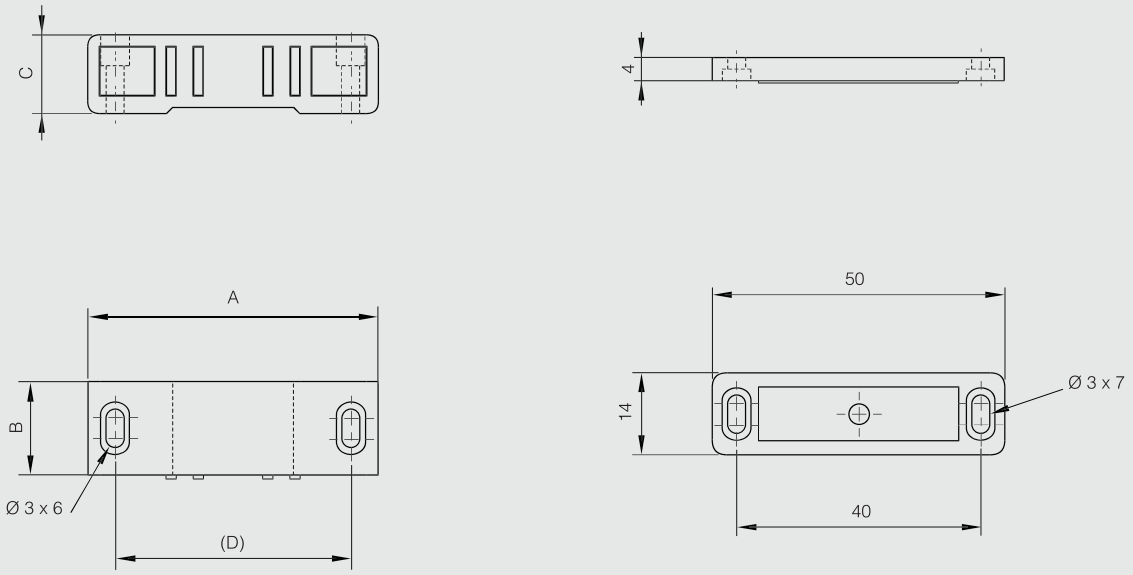

Screw-on magnetic catches with counterplate - force 4 kg - high temperature resistance

ZAMAK RoHS

Part number	Material	Finish	A	B	C	Force	Note	Weight (g)
16-7-3494	zinc die-cast	nickel plated	49.4	16.4	15.6	4kg	temperature up to 80°c	56
16-7-3610	zinc die-cast	nickel plated	49.4	16.4	15.6	4kg	temperature up to 300°c	56

Screw-on magnetic catch with counterplate - force 4 kg

ZAMAK RoHS

Part number	Material	Finish	A	B	C	Force	Weight (g)
16-7-3483	zinc die-cast	nickel plated	52.2	16	15	4kg	49

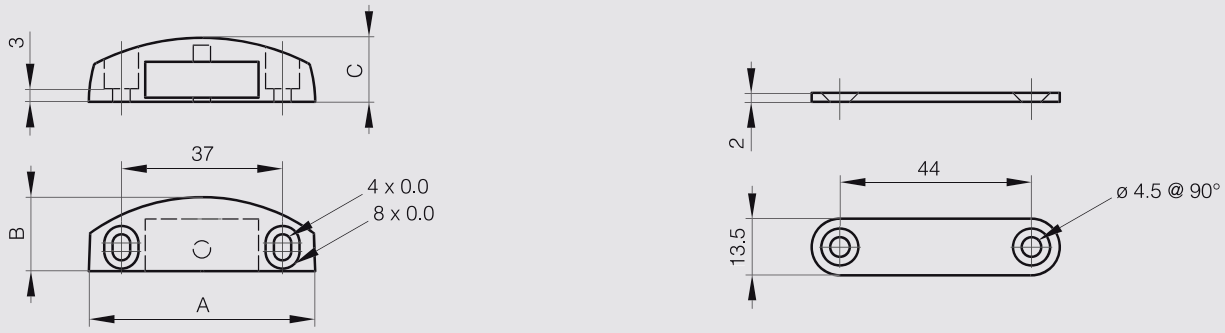

Screw-on magnetic catches with counterplate - force 3 to 6 kg

POLYMER RoHS

Forces valid with the related counterplate.

Part number	Material	Finish	A	B	C	C1	C2	D	E	F	G	S1	S2	Force	Weight (g)
16-7-3487	shock polystyrene	white	58	12	15.2	5	5	42	15.5	57	42	3.2x6	8.1	4kg	31
16-7-3488	shock polystyrene	white	62.1	12.6	15.2	6	5.5	45	16.4	62	44.7	3.2x6	8.1	6kg	41

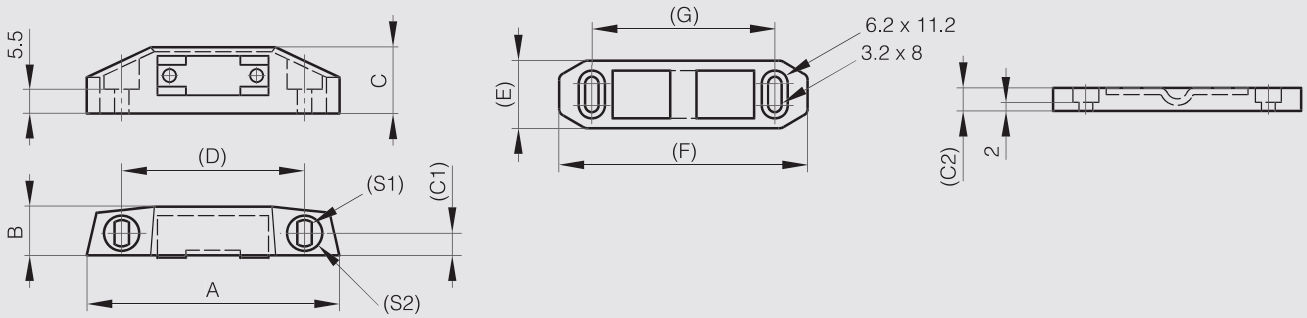

Screw-on magnetic catches with counterplate - force 8 kg - high temperature resistance

ZAMAK RoHS

Part number	Material	Finish	A	B	C	E	F	G	H	Force	Note	Weight (g)
16-7-3391	zinc die-cast	nickel plated	86	16.4	15.6	16	92	76	2	8kg	temperature up to 80°c	112
16-7-3611	zinc die-cast	nickel plated	86	16.4	15.6	16	92	76	2	8kg	temperature up to 300°c	112

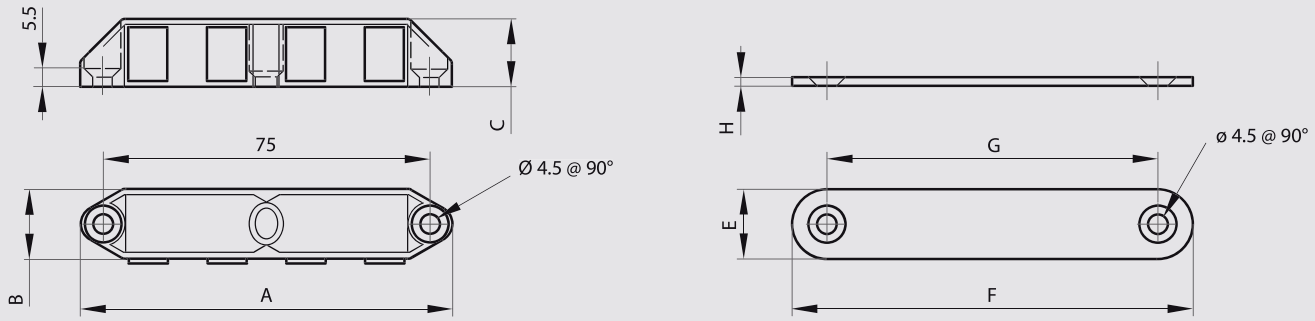

Screw-on magnetic catch without counterplate - force 12 kg

POLYMER RoHS

Part number	Material	Finish	A	B	C	D	Force	Weight (g)
16-7-3672	polypropylene	white	74	14	17.5	64	12kg	37

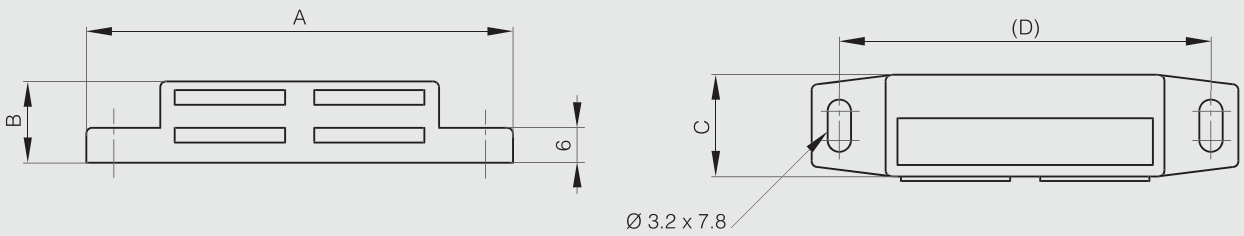

Counter plate for magnetic catch 16-7-3672

STEEL RoHS

Part number	Material	Finish	A	B	C	D	Weight (g)
16-7-3673	steel	zinc plated	66	12	2	54	11

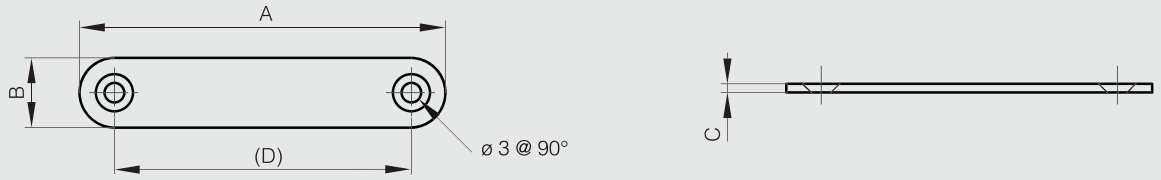

Screw-on magnetic catch with counter plate - force 7 kg

BRASS RoHS

Supplied with counter plate.
Material:
Catch: brass / steel / ferrite / aluminium alloy.
Counter plate: nickel plated steel.

Part number	Material	Finish	A	B	C	D	Force	Weight (g)
16-7-4296	brass	nickel plated	50	17	12	40	7kg	32

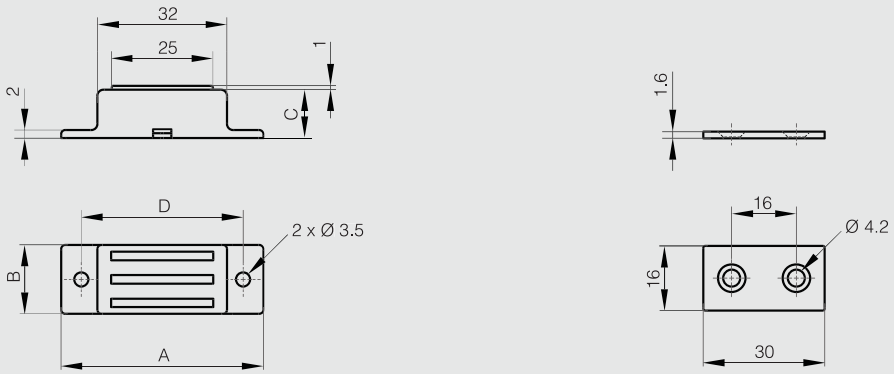

Screw-on magnetic catch without counter plate - force 14 kg

STAINLESS STEEL RoHS

Strong magnetic force.
Material: 304 stainless steel / steel / neodymium.
Counter plate not included.
Produced mainly in stainless steel, for a complete description of the materials contact us.

Part number	Material	Finish	A	B	C	D	Force	Weight (g)
16-7-4297	304 stainless steel	polished	50	17	12.3	40	14kg	41

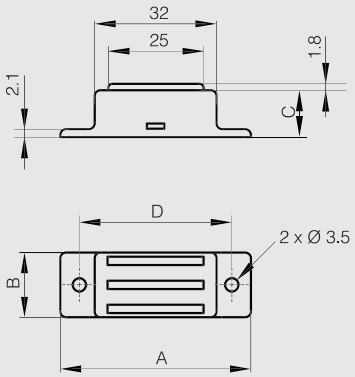

Screw-on magnetic catch without counter plate - force 7 and14 kg - high temperature resistance

STAINLESS STEEL RoHS

Suitable for high temperature environments up to 250°C.
Strong magnetic force. Corrosion free.
Counter plate not included.

Part number	Material	Finish	A	B	C	D	Force	Weight (g)
16-7-4294	304 stainless steel	polished	50	17	12.3	40	7.1kg	40
16-7-4295	304 stainless steel	polished	50	17	12.3	40	14.3kg	40

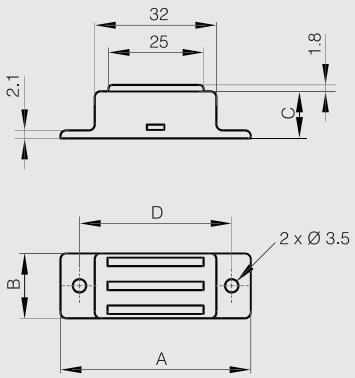

Snap-in magnets without counterplate

POLYMER

Snap-in magnets for sheet metal applications. Suitable for material thicknesses 1.6 mm or 2.6 mm.
E denotes material thickness.
Cut-out varies to suit metal thickness.
Flex-tab for easy removal.

Part number	Material	Finish	A	B	C	Force	Weight (g)
16-7-4209	POM	black	41	13	14.6	3kg	6

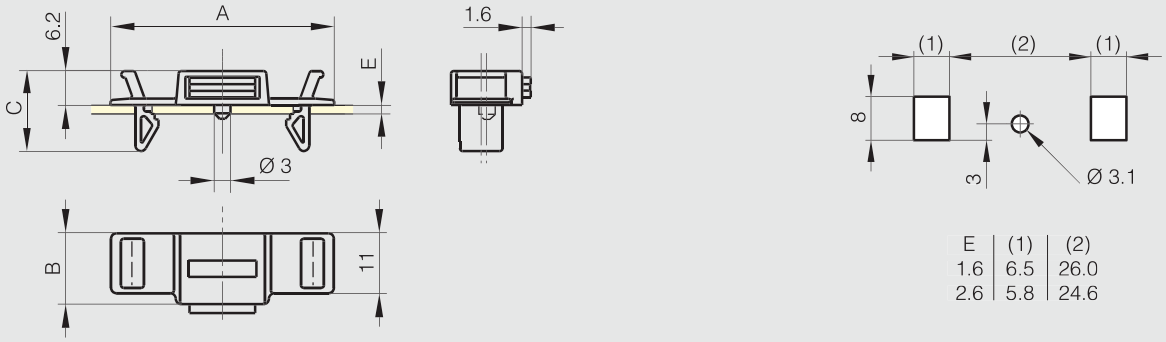

E	(1)	(2)
1.6	6.5	26.0
2.6	5.8	24.6

Snap-in magnets

POLYMER RoHS

Part number	Material	Finish	A	B	C	D	E	Force	Note	Weight (g)
16-7-4013	polypropylene	white	25.5	12.3	10.4	23	11	1.5kg	for sheetmetal thickness 1.5mm	4
16-7-4015	polypropylene	white	39.5	10	11	35	8.2	4kg	for sheetmetal thickness 1.5mm	8
16-7-3674	polypropylene	black	54	12.5	14.5	51.5	10.8	15kg	for sheetmetal thickness 2.0mm	32

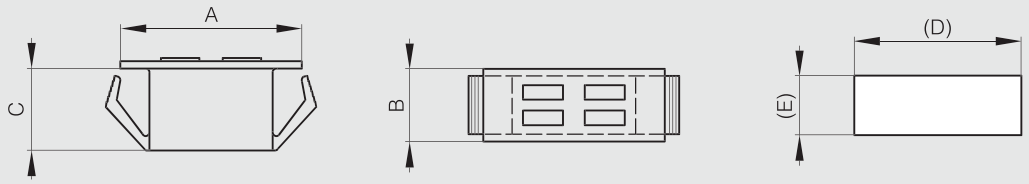

Counterplates for snap-in magnets

STEEL RoHS

Counterplates for part numbers 16-7-4013, 16-7-4015 and 16-7-3674.

Part number	Material	Finish	A	B	C	D	Note	Weight (g)
16-7-3351	steel	zinc plated	41	14	1.5	31	for part number 16-7-4013	6
16-7-3673	steel	zinc plated	66	12	2	54	for part numbers 16-7-3674 and 16-7-4015	11

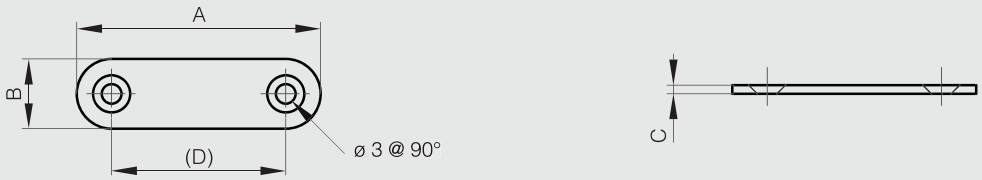

Housing

POLYMER RoHS

Housing for part number 16-7-3674.
For screw-mounting.

Part number	Material	Finish	A	B	C	D	Weight (g)
16-7-3675	polypropylene	black	75.5	14.8	18.5	65	8

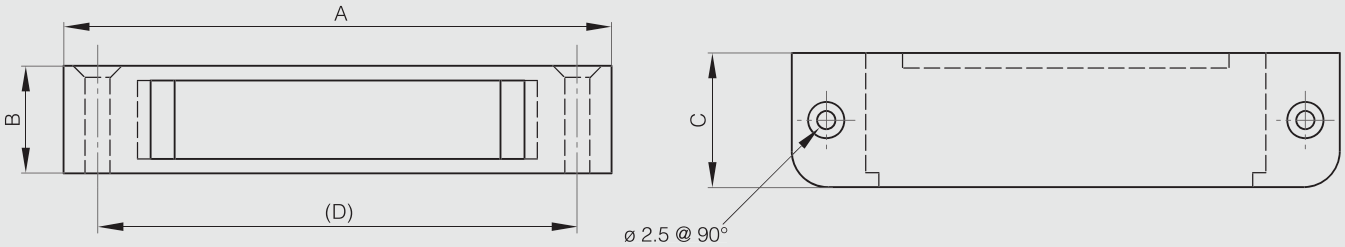

Flush magnet with high temperature resistance - force 4 kg

ZAMAK RoHS

Part number	Material	Finish	A	B	C	D	Force	Note	Weight (g)
16-7-3484	zinc die-cast	nickel plated	56	16.3	16.7	42	4kg	temperature up to 150°c	64

Flush compact magnetic catch without counterplate - force 5 kg

STEEL RoHS

Part number	Material	Finish	A	B	D	Force	Weight (g)
16-7-3387	steel	zinc plated	24	16	13.5	5kg	13

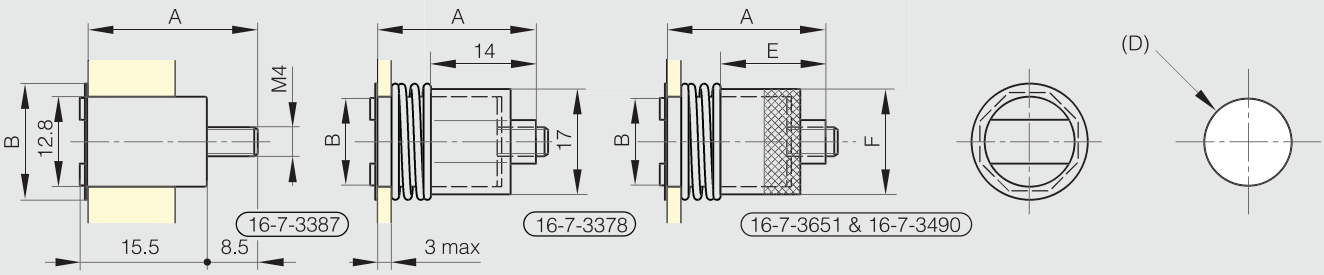

Flush compact magnetic catch without counterplate - force 4.2 kg

STEEL RoHS

Fixing by plastic nut.

Part number	Material	Finish	A	B	D	Force	Weight (g)
16-7-3378	steel	zinc plated	24	12	13.5	4.2kg	14

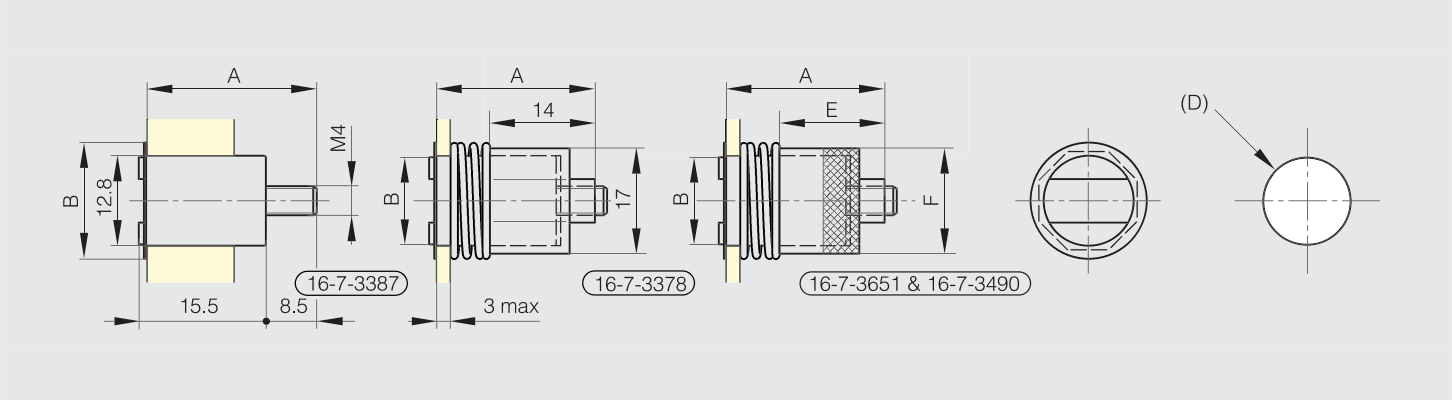

Flush compact catch without counterplate - high temperature resistance

STEEL RoHS

Temperature resistance up to 250°C.
Fixing by knurled nut in aluminium.

Part number	Material	Finish	A	B	D	E	F	Force	Weight (g)
16-7-3490	steel	zinc plated	26	12	13.5	14.2	16.5	4.2kg	18
16-7-3651	steel	zinc plated	32	16	17.5	19.2	21.5	8kg	40

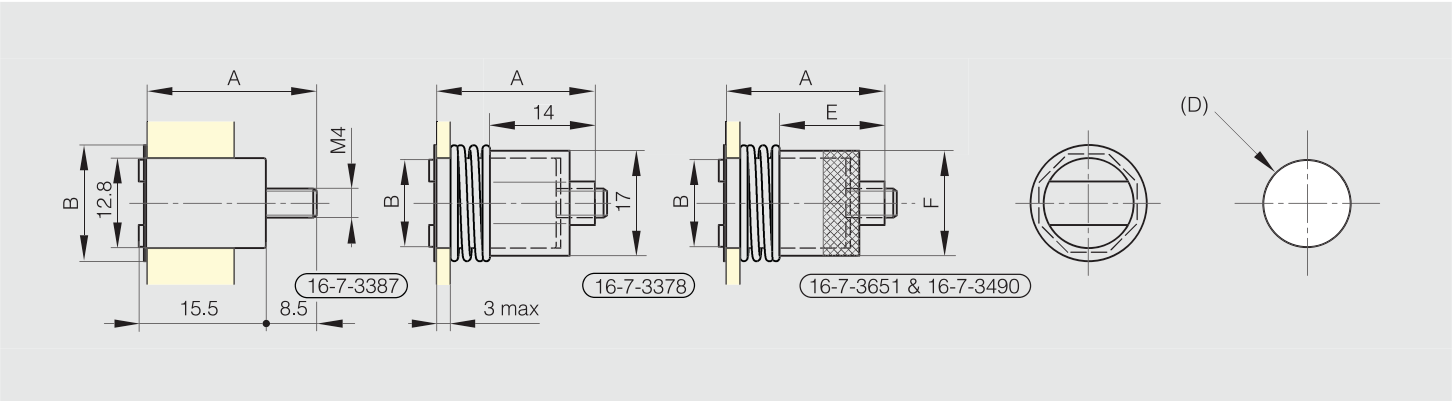

Counter plate for part numbers 16-7-3378, 16-7-3387, 16-7-3490 and 16-7-3651

STEEL RoHS

Part number	Material	Finish	A	B	Weight (g)
16-7-3349	steel	zinc plated	15.1	3	4

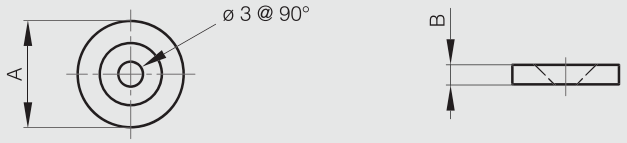

Self-adhesive magnetic profile

RoHS

Sold in 30 meter rolls.
The weight indicated in grams in the table is for 1 meter.
The weight of a roll (30 meters) is:
- 3.36 kg for the part number 16-7-3682.
- 8.70 kg for the part number 16-7-3683.

Heat resistance : 100°C

Part number	Material	Finish	B	C	Force	Weight (g)
16-7-3682	flexible magnet	self adhesive	19	1.5	55 g/cm²	112
16-7-3683	flexible magnet	self adhesive	50	1.5	55 g/cm²	290

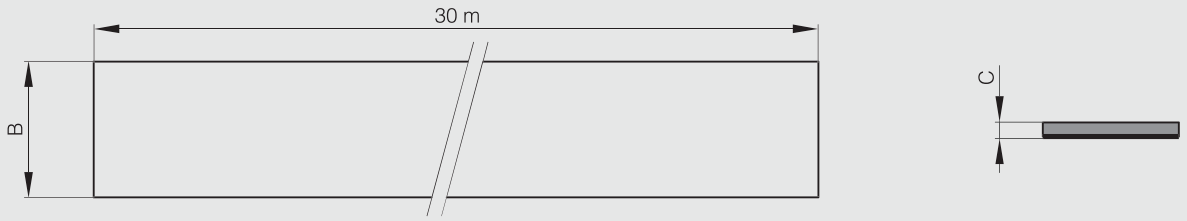

Rotary toggle latches

Strike included.

Part number	Material	Finish	A	B	C	Note	Weight (g)
16-1-9012	steel	zinc plated	62	38	13.2	with strike	50
16-1-9013	304 stainless steel	raw	62	38	13.2	with strike	50

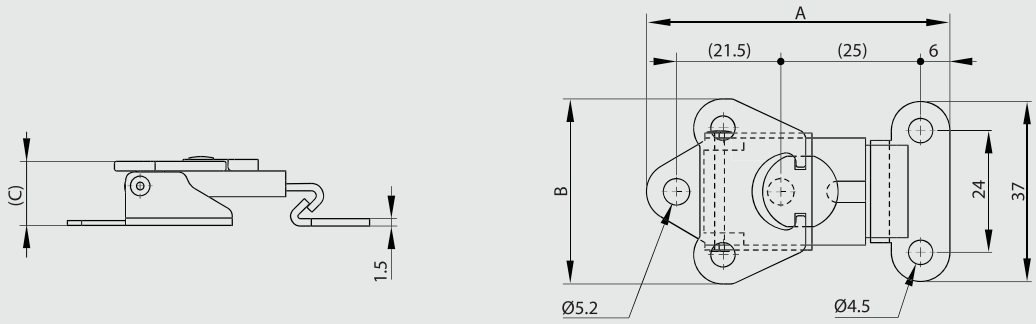

Spring loaded rotary toggle latches

Strike included.

Part number	Material	Finish	A	B	C	Note	Weight (g)
16-1-9014	steel	zinc plated	62	46	12	with strike	60
16-1-9015	304 stainless steel	raw	62	46	12	with strike	60

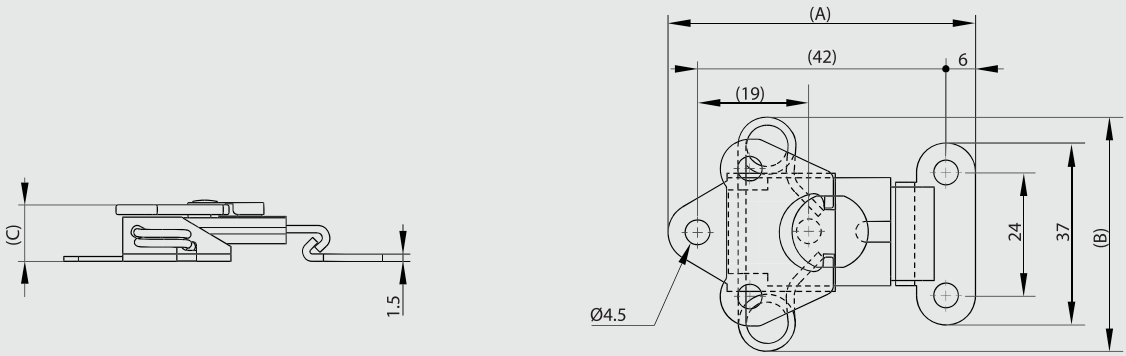

Padlockable rotary toggle latches

Strike included.

Part number	Material	Finish	A	B	C	Note	Weight (g)
16-1-9016	steel	zinc plated	64	38	24	with strike	60
16-1-9017	304 stainless steel	raw	64	38	24	with strike	60

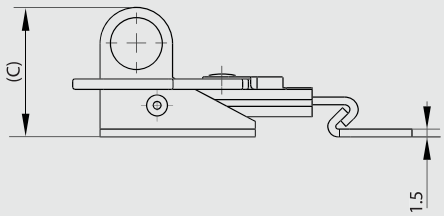

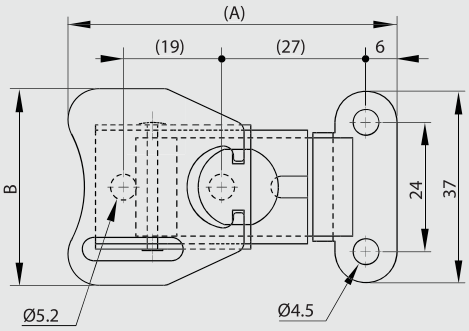

Lockable toggle latch without strike

STAINLESS STEEL | STEEL | RoHS

Keyed alike (2 identical keys).
Strike not included.
For part number 16-1-4257: with dust shutter.

Part number	Material	Finish	A	B	C	Weight (g)
16-1-4050	steel	zinc plated	106.5	40	17	132
16-1-4257	304 stainless steel	raw	106.5	40	17	132

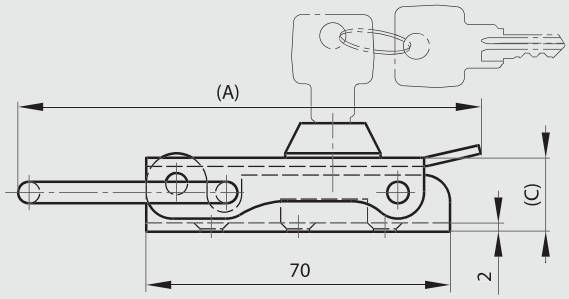

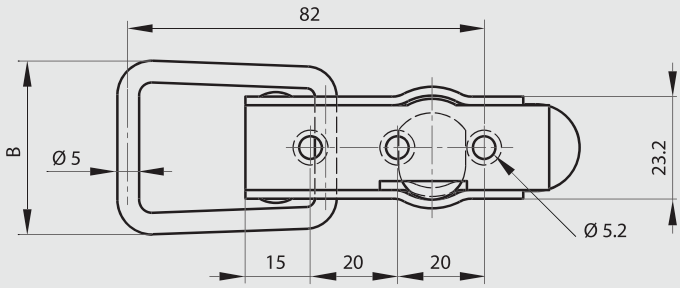

Strikes for part numbers 16-1-4050 and 16-1-4257

STAINLESS STEEL | STEEL | RoHS

Possible alternative strikes: 16-1-4038, 16-7-3406 and 16-7-3870.

Part number	Material	Finish	A	B	Weight (g)
16-7-3551	steel	zinc plated	28	25	24
16-7-3601	304 stainless steel	raw	28	25	24

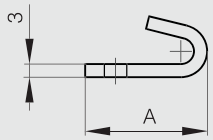

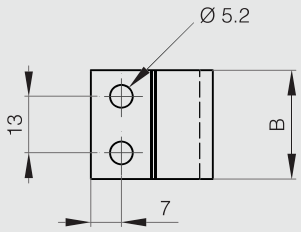

Toggle latches - locking

Zinc die-cast toggle latches with or without lockable options

ZAMAK RoHS

Available with or without keylock options.
Strike included.

Part number	Material	Finish	A	B	C	E	F	G	Note	Weight (g)
16-1-9003	zinc die-cast	black	64.5	26.5	17.3	13	12	30	with key	72
16-1-9004	zinc die-cast	black	64.5	26.5	17.3	13	12	30	without key	72
16-1-9001	zinc die-cast	black	76	32	21	16.8	16	35.5	with key	118
16-1-9002	zinc die-cast	black	76	32	21	16.8	16	35.5	without key	118

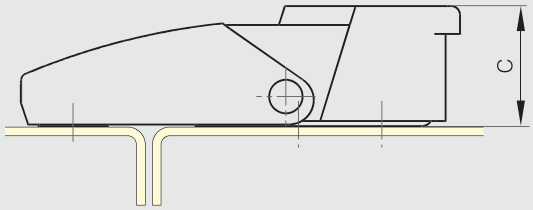

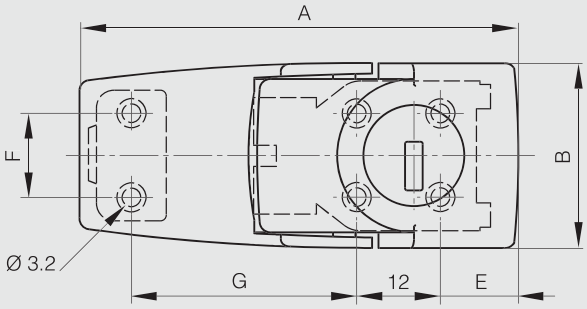

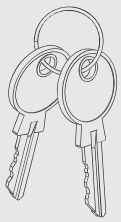

Soft toggle latch

POLYMER RoHS

Part number	Material	Finish	A	B	C	Weight (g)
16-1-9006	elastomer	black	96.5	29	20	36

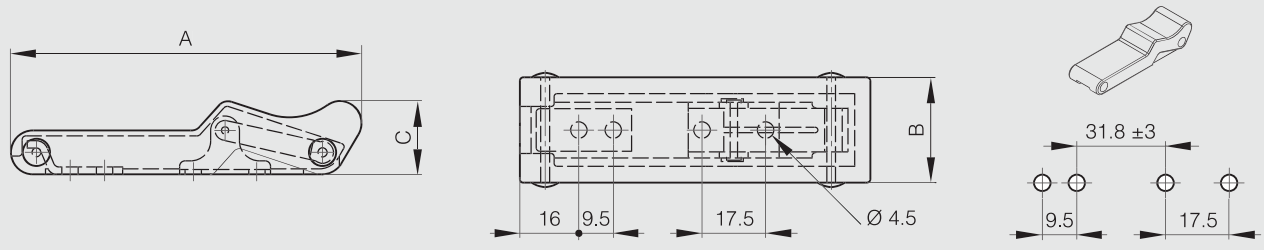

Large soft toggle latch

Stainless steel strike.

POLYMER RoHS

Part number	Material	Finish	A	B	C	Weight (g)
16-1-9011	elastomer	black	151	45.7	29.5	130

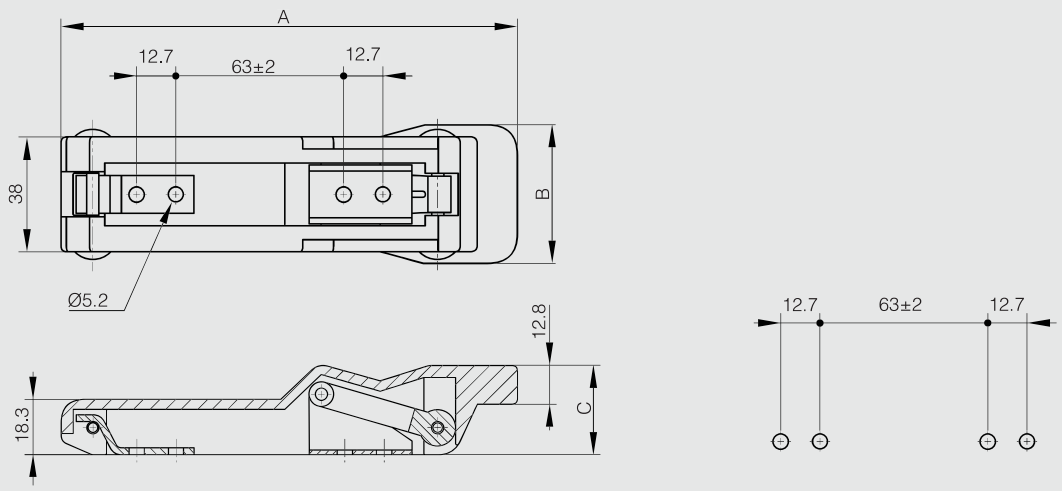

Flexible T-handle latch

Keeper and bracket in Nylon.

Part number	Material	Finish	A	B	C	Weight (g)
16-7-4276	elastomer	black	112	47	34	39

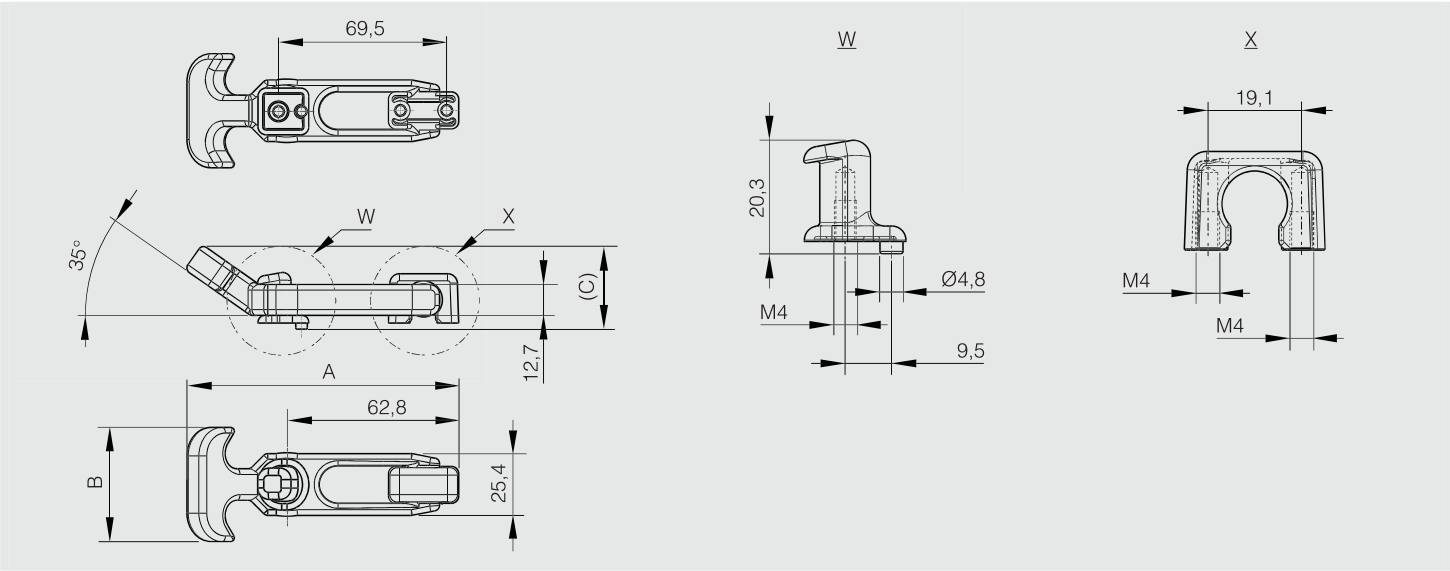

Toggle latches without strike - 50 mm

STAINLESS STEEL STEEL RoHS

These latches are used with strike part numbers 16-7-3414, 16-7-3529 and 16-7-3531.
Padlockable option available for part number 16-7-3394.

Part number	Material	Finish	A	B	C	Note	Weight (g)
16-7-3410	steel	zinc plated	50	22	12.5	drilled	20
16-7-3525	304 stainless steel	raw	50	22	12.5	drilled	20
16-7-3527	304 stainless steel	raw	50	23.4	11.7	undrilled	20

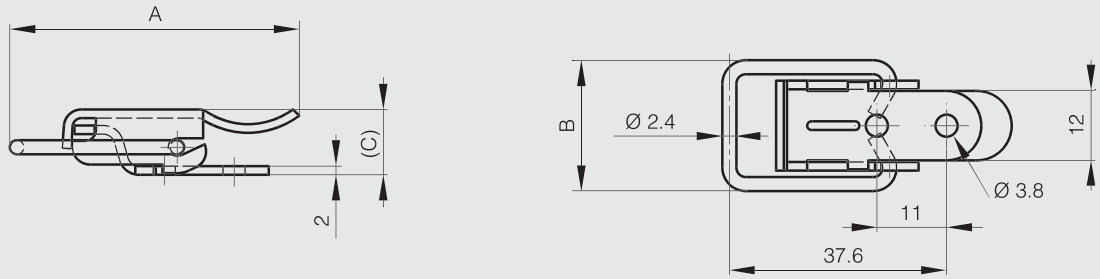

Strikes for part numbers 16-7-3410, 16-7-3525 and 16-7-3527

STAINLESS STEEL STEEL RoHS

Part number	Material	Finish	A	B	C	D	E	Note	Weight (g)
16-7-3414	steel	zinc plated	13.7	24	1.5	14	5	drilled	4
16-7-3531	304 stainless steel	raw	13.4	24	1.5			undrilled	4
16-7-3529	304 stainless steel	raw	13.4	24	1.5	14	5	drilled	4

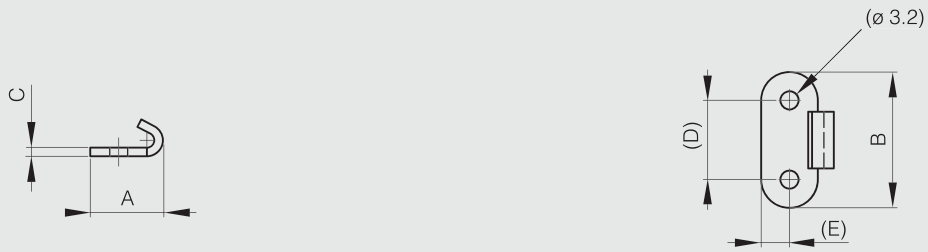

Toggle latches with strike - 52 mm

STAINLESS STEEL | STEEL | RoHS

Part number	Material	Finish	A	B	C	Weight (g)
16-7-3845	steel	zinc plated	52	41	13.5	23
16-7-3846	304 stainless steel	raw	52	41	13.5	23

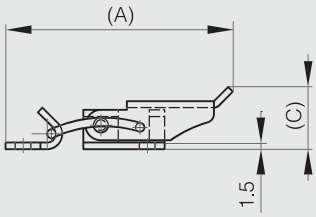

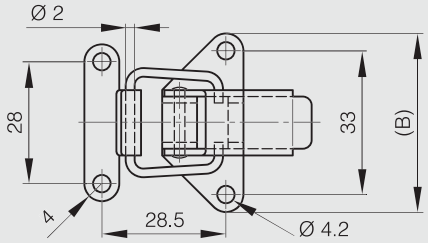

Toggle latches without strike - 58.1 mm

This latch is used with strike, part numbers 16-7-3873 and 16-7-3874.

STAINLESS STEEL STEEL RoHS

Part number	Material	Finish	A	B	C	Weight (g)
16-7-3875	steel	zinc plated	58.1	23.4	12.7	32
16-7-3876	304 stainless steel	raw	58.1	23.4	12.7	32

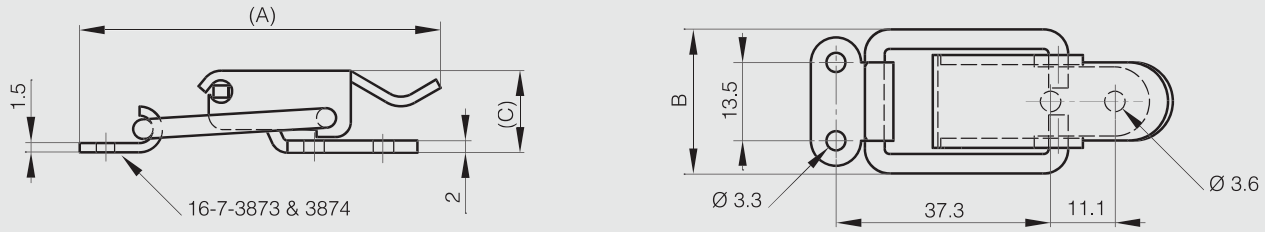

Strikes for part numbers 16-7-3875 and 16-7-3876

STAINLESS STEEL STEEL RoHS

Part number	Material	Finish	Weight (g)
16-7-3873	steel	zinc plated	4
16-7-3874	304 stainless steel	raw	4

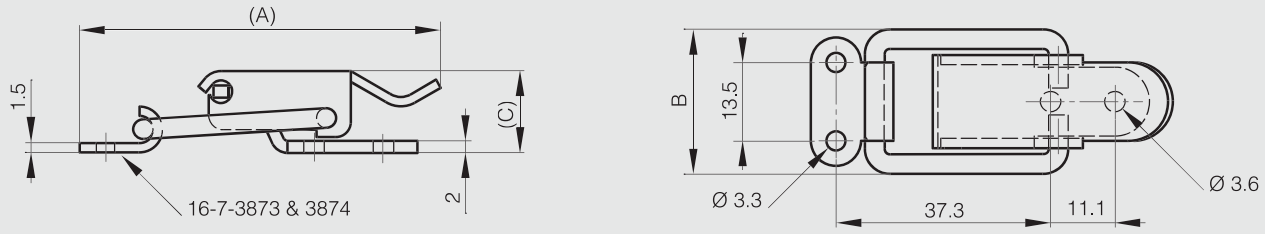

Toggle latches without strike - 80.2 mm

STAINLESS STEEL STEEL RoHS

The latches are used with strikes part numbers 16-7-3415 and 16-7-3530.
Latches are available with padlockable option part numbers 16-7-3395, 16-7-3397, 16-7-3723 and 16-7-3724.

Part number	Material	Finish	A	B	C	Note	Weight (g)
16-7-3411	steel	zinc plated	80.2	32	14.5	drilled	54
16-7-3526	304 stainless steel	raw	80.2	32	14.5	drilled	54

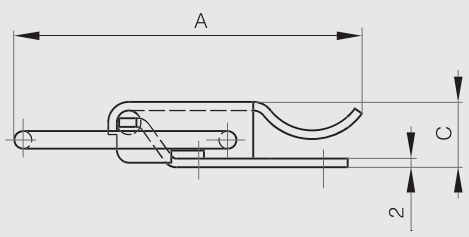

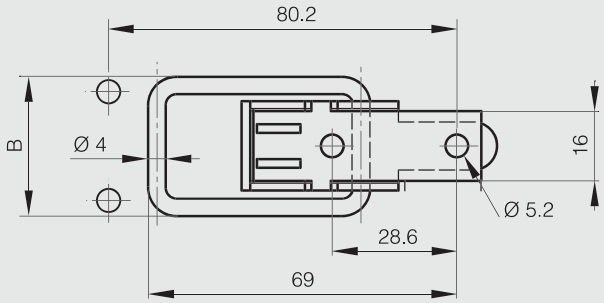

Strikes for part numbers 16-7-3411 and 16-7-3526

STAINLESS STEEL STEEL RoHS

Part number	Material	Finish	A	B	C	D	E	Note	Weight (g)
16-7-3415	steel	zinc plated	20	26.2	2	15	5.1	drilled	9
16-7-3530	304 stainless steel	raw	20	26.5	2	15	5.2	drilled	9

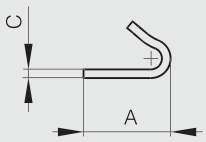

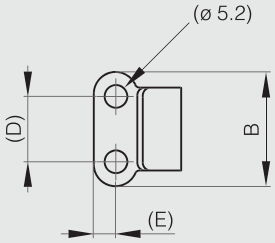

Toggle latch without strike - 89.7 mm

STEEL RoHS

This latch is used with strike part number 16-7-3881.

Part number	Material	Finish	A	B	C	Weight (g)
16-7-3880	steel	zinc plated	89.7	33	14.2	68

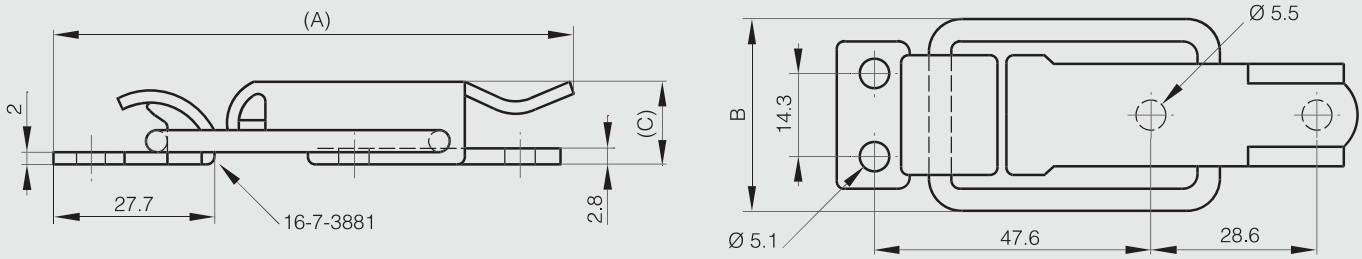

Strike for part number 16-7-3880

STEEL RoHS

Part number	Material	Finish	Weight (g)
16-7-3881	steel	zinc plated	9

Toggle latches without strike - 88.5 mm

STAINLESS STEEL STEEL RoHS

Punched holes.
These latches are used with strike part numbers 16-7-3551 and 16-7-3601.

Part number	Material	Finish	A	B	C	Weight (g)
16-7-3508	steel	zinc plated	88.5	40	20	106
16-7-3829	304 stainless steel	raw	88.5	40	20	106

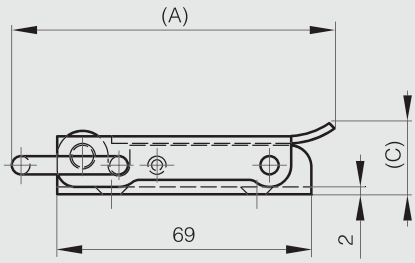

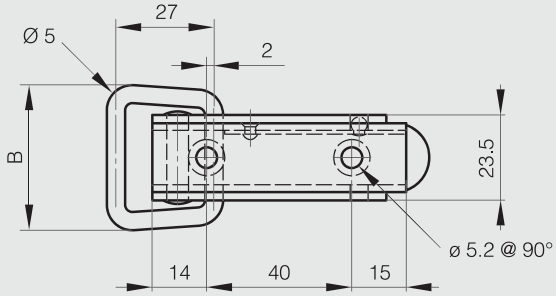

Strikes for part numbers 16-7-3508 and 16-7-3829

STAINLESS STEEL STEEL RoHS

Part number	Material	Finish	A	B	Weight (g)
16-7-3551	steel	zinc plated	28	25	24
16-7-3601	304 stainless steel	raw	28	25	24

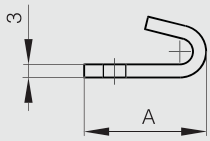

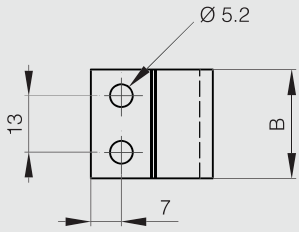

Other strikes for part numbers 16-7-3508 and 16-7-3829

STAINLESS STEEL STEEL RoHS

Drilled and countersunk for 4,5 mm diameter screws.

Part number	Material	Finish	A	B	Weight (g)
16-7-3406	steel	zinc plated	85	25	57
16-7-3828	304 stainless steel	raw	85	25	57

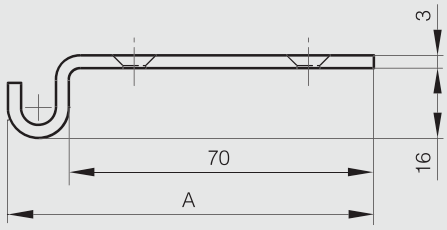

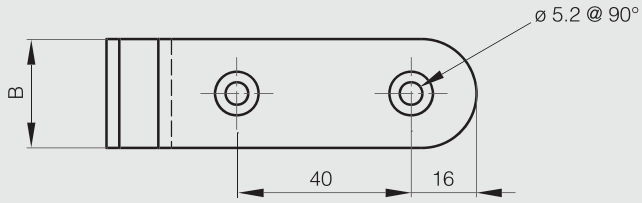

Other strikes for part number 16-7-3508

STEEL RoHS

Part number	Material	Finish	A	B	C	F	G	S	Weight (g)
16-1-4038	steel	zinc plated	63	25	3	8.8	26	4.5	42
16-7-3870	steel	zinc plated	63.5	20	2	7.9	19	5.4	24

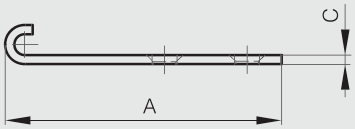

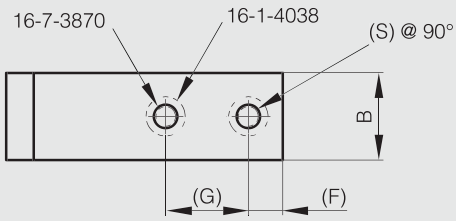

Toggle latches without strike (consistent tension)

This latch is used with strike part number 16-7-3874.

Part number	Material	Finish	A	B	C	Weight (g)
16-7-3891	304 stainless steel	raw	58.6	20.6	12.7	27

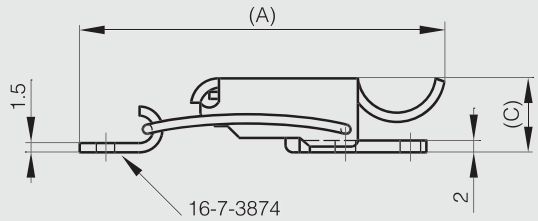

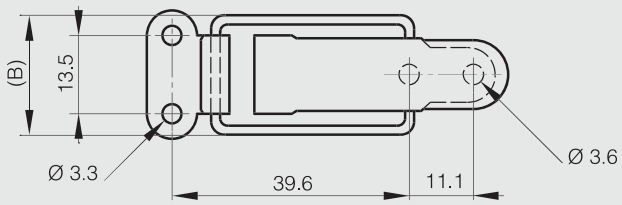

Strike for part number 16-7-3891

Part number	Material	Finish	Weight (g)
16-7-3874	304 stainless steel	raw	4

Heavy duty toggle latch with strike

STEEL RoHS

Part number	Material	Finish	A	B	Weight (g)
16-7-4277	steel	zinc plated	215.8	45	470

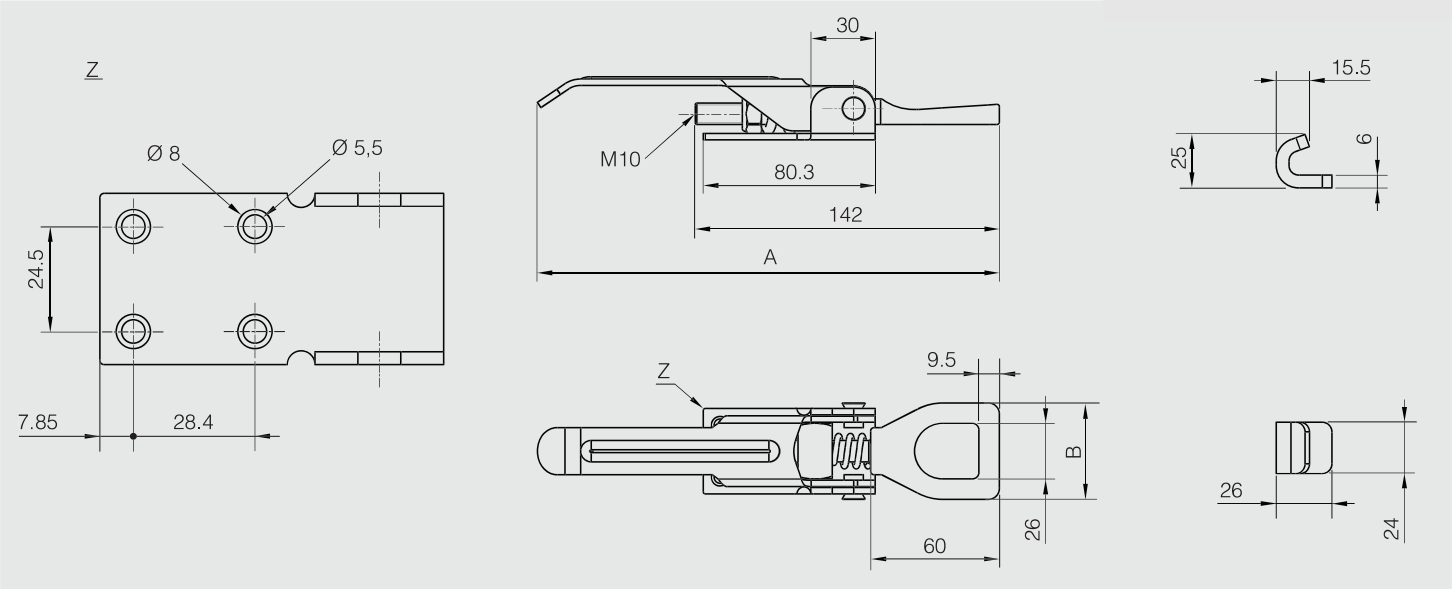

Padlockable toggle latches - 49 mm

This latch is used with strike part number 16-7-3414.

STEEL RoHS

Part number	Material	Finish	A	B	C	Weight (g)
16-7-3394	steel	zinc plated	49	22.5	19	25

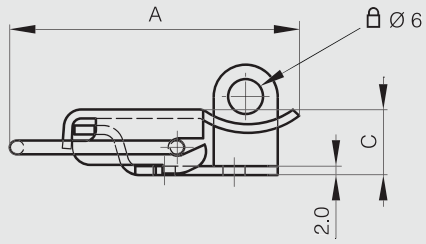

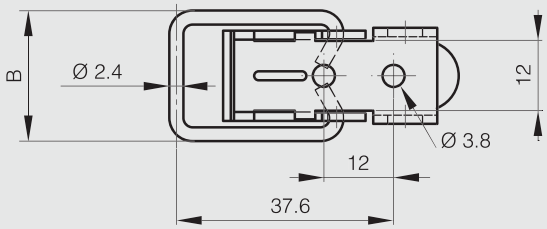

Strike for part number 16-7-3394

STEEL RoHS

Part number	Material	Finish	A	B	C	D	E	Note	Weight (g)
16-7-3414	steel	zinc plated	13.7	24	1.5	14	5	drilled	4

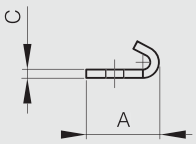

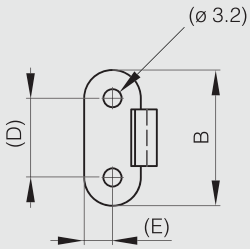

Padlockable toggle latch without strike - 65 mm

STEEL RoHS

This latch is used with strike part number 16-7-3878.

Part number	Material	Finish	A	B	C	Weight (g)
16-7-3879	steel	zinc plated	65	23.4	20.3	36

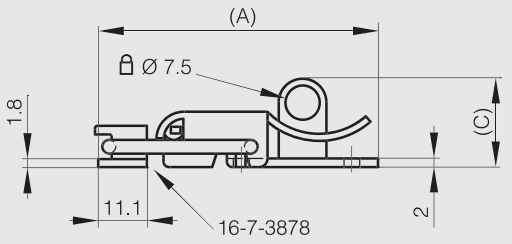

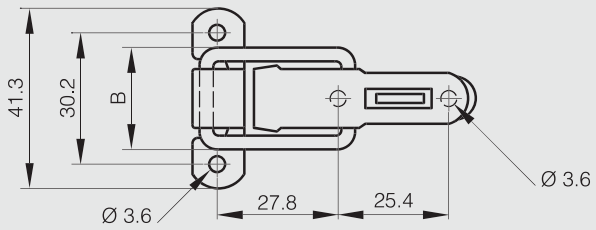

Strike for part number 16-7-3879

STEEL RoHS

Part number	Material	Finish	Weight (g)
16-7-3878	steel	zinc plated	5

Padlockable toggle latches - 80.2 mm

STAINLESS STEEL STEEL RoHS

These latches are used with strike part numbers 16-7-3729 and 16-7-3730.

Part number	Material	Finish	A	B	C	Note	Weight (g)
16-7-3723	steel	zinc plated	80.2	32	23.5	drilled	55
16-7-3724	304 stainless steel	raw	80.2	32	23.5	drilled	55

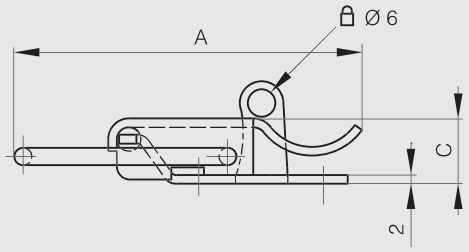

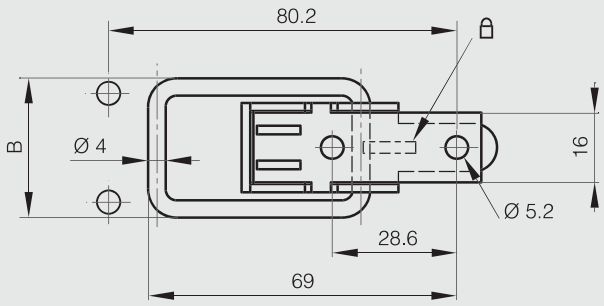

Strikes for part numbers 16-7-3723 and 16-7-3724

STAINLESS STEEL STEEL RoHS

Part number	Material	Finish	A	B	Note	Weight (g)
16-7-3729	steel	zinc plated	27.4	26	drilled	10
16-7-3730	304 stainless steel	raw	27.4	26	drilled	10

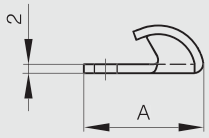

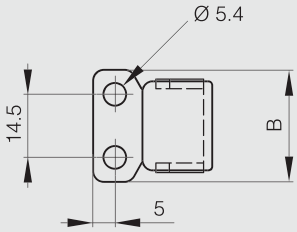

Padlockable toggle latches - 80.5 mm

STEEL RoHS

This latch is used with strike part number 16-7-3415.

Part number	Material	Finish	A	B	C	Note	Weight (g)
16-7-3397	steel	raw	80.5	32	18.5	drilled	59
16-7-3395	steel	zinc plated	80.5	32	15	drilled	59

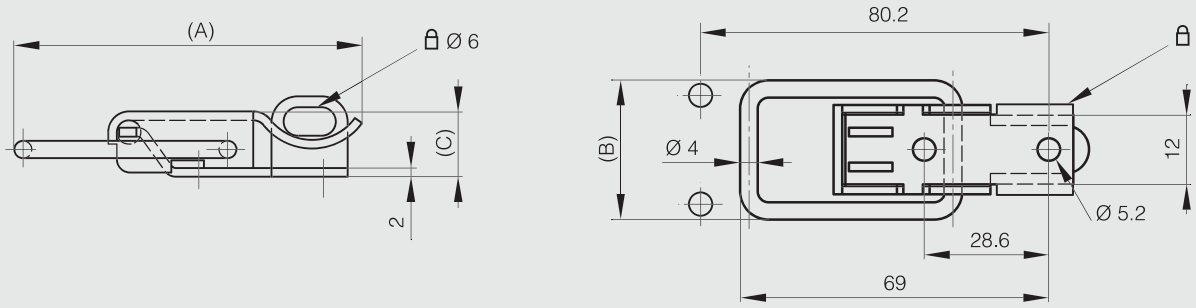

Strike for part numbers 16-7-3395 and 16-7-3397

STEEL RoHS

Part number	Material	Finish	A	B	C	D	E	Note	Weight (g)
16-7-3415	steel	zinc plated	20	26.2	2	15	5.1	drilled	9

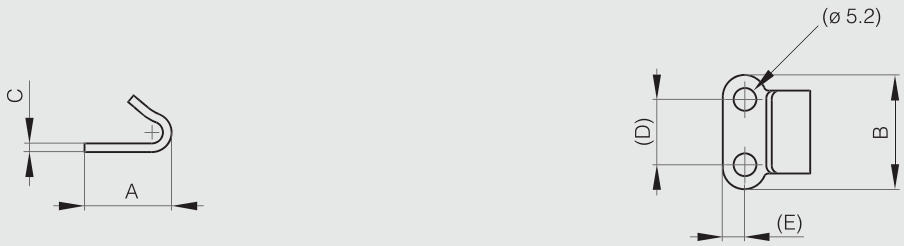

Padlockable toggle latches - 97.6 mm

This latch is used with strike part numbers 16-7-3881 and 16-7-3885.

Part number	Material	Finish	A	B	C	Weight (g)
16-7-3883	steel	zinc plated	97.6	33	23.1	68
16-7-3884	304 stainless steel	raw	97.5	33	23.1	68

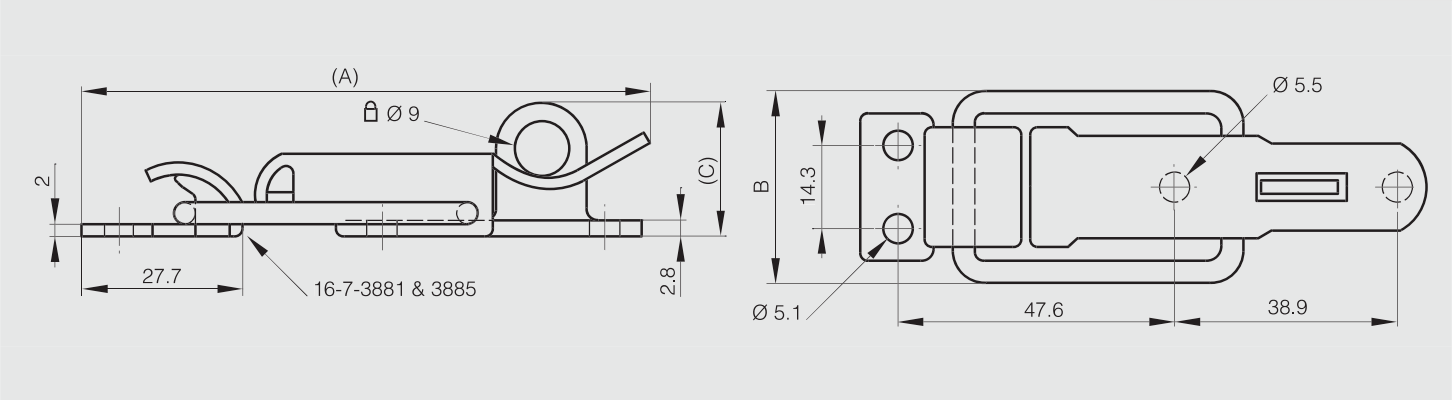

Strikes for part numbers 16-7-3883 and 16-7-3884

Part number	Material	Finish	Weight (g)
16-7-3881	steel	zinc plated	9
16-7-3885	304 stainless steel	raw	9

Padlockable toggle latches - 122 mm

STEEL RoHS

This latch is used with strike part number 16-7-3551.

Part number	Material	Finish	A	B	C	Weight (g)
16-7-3664	steel	zinc plated	122	45	32.5	176

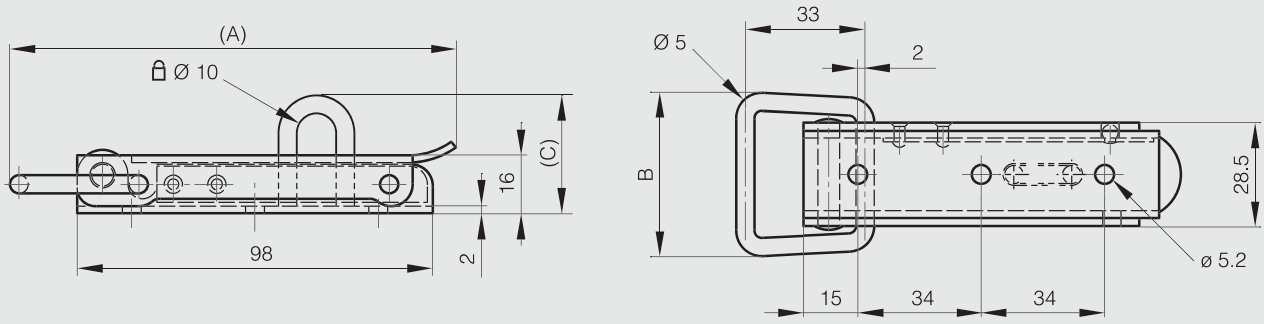

Strike for part number 16-7-3664

STEEL RoHS

Part number	Material	Finish	A	B	Weight (g)
16-7-3551	steel	zinc plated	28	25	24

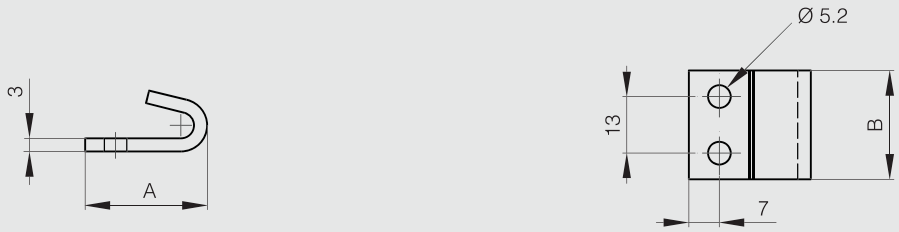

Spring loaded and padlockable toggle latches - 52 mm

STAINLESS STEEL STEEL RoHS

Dimension A (52 mm) without tension. Dimension A can be extended up to 3 mm putting the latch under tension.
These latches are used with strike part numbers 16-7-3739, 16-7-3741 and 16-7-3742.

Part number	Material	Finish	A	B	C	Weight (g)
16-7-3759	steel	zinc plated	55.5	34.5	12	32
16-7-3760	304 stainless steel	raw	55.5	34.5	12	32

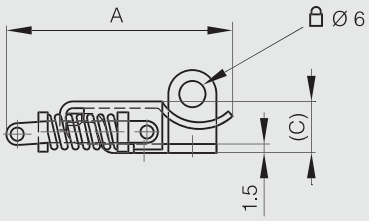

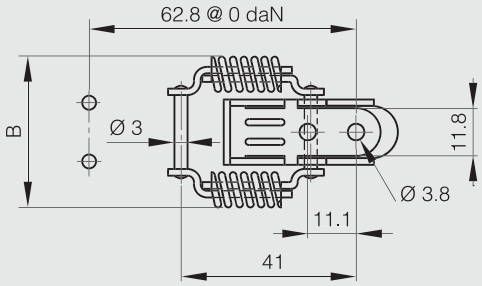

Strikes for part numbers 16-7-3759 and 16-7-3760

STAINLESS STEEL STEEL RoHS

Part number	Material	Finish	A	B	Note	Weight (g)
16-7-3741	steel	zinc plated	28.5	20.5	drilled	4
16-7-3739	304 stainless steel	raw	28.5	20.5	undrilled	4
16-7-3742	304 stainless steel	raw	28.5	20.5	drilled	4

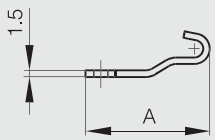

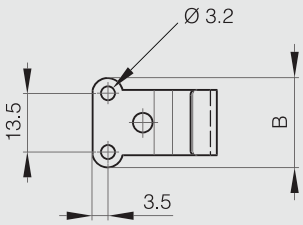

Spring loaded and padlockable toggle latches - 74 mm

STAINLESS STEEL STEEL RoHS

Dimension A (74 mm) without tension. Dimension A can be extended up to 4 mm putting the latch under tension.
This latch is used with strike part numbers 16-7-3751, 16-7-3753 and 16-7-3754.

Part number	Material	Finish	A	B	C	Weight (g)
16-7-3765	steel	zinc plated	74	46.5	15	75
16-7-3766	304 stainless steel	raw	74	46.5	15	75

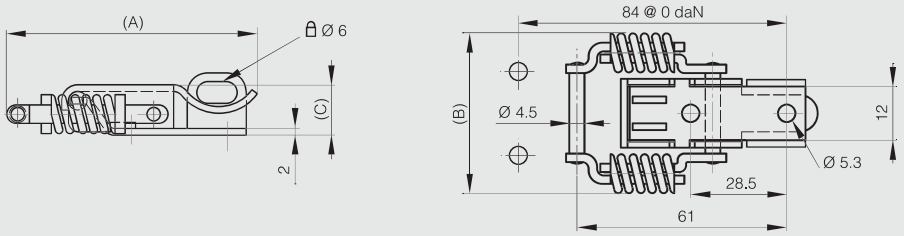

Strikes for part numbers 16-7-3765 and 16-7-3766

STAINLESS STEEL STEEL RoHS

Part number	Material	Finish	A	B	Note	Weight (g)
16-7-3753	steel	zinc plated	36	40	drilled	20
16-7-3751	304 stainless steel	raw	36	40	undrilled	20
16-7-3754	304 stainless steel	raw	36	40	drilled	20

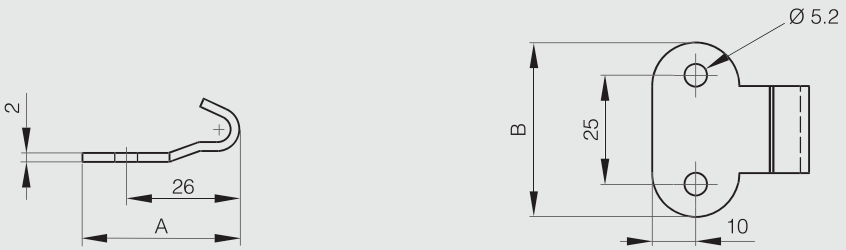

Spring loaded and padlockable toggle latch - 70.9 mm

This latch is used with strike part number 16-7-3916.

Part number	Material	Finish	A	B	C	Weight (g)
16-7-3917	304 stainless steel	raw	70.9	28.7	23.1	50

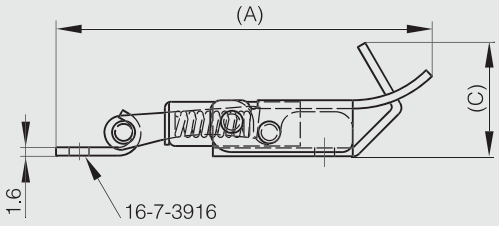

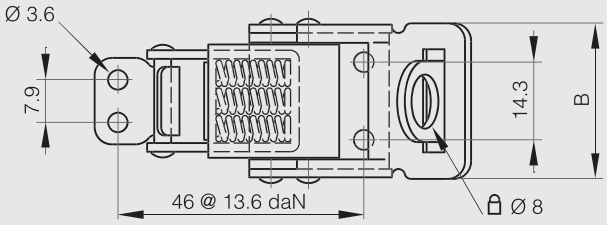

Strike for part number 16-7-3917

Part number	Material	Finish	Weight (g)
16-7-3916	304 stainless steel	raw	5

Adjustable toggle latches with strike - padlockable - 82 mm to 118 mm

STAINLESS STEEL | STEEL | RoHS

Part number	Material	Finish	A	B	C	C1	C2	D	E	F	G	H	J	K	L	S	Note	Weight (g)
16-7-4018	steel	zinc plated	82	27	19	2	2	4	14	4.5	10	62-72	22	11	14	4	82 < A < 92	48
16-7-4020	steel	zinc plated	108	34	17	2.5	3	5	17	6	10	85-96	27	16	18	5.2	108 < A < 119	102
16-7-4021	steel	zinc plated	118	39	22	3	2.5	6	20	6	18	85-96	33	15	20	5.2	118 < A < 129	124
16-7-4025	304 stainless steel	raw	82	27	19	2	2	4	14	4.5	10	62-72	22	11	14	4	82 < A < 92	48
16-7-4027	304 stainless steel	raw	108	34	17	2.5	3	5	17	6.5	10	85-96	27	16	18	5.2	108 < A < 119	102
16-7-4028	304 stainless steel	raw	118	39	22	3	2.5	6	20	6.5	18	85-96	33	15	20	5.2	118 < A < 129	124

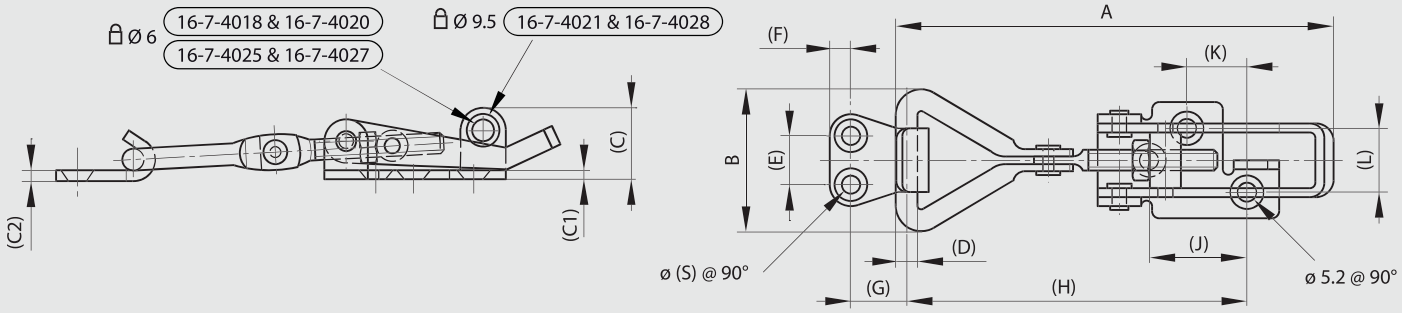

Adjustable toggle latches with strike - padlockable - 174 mm

STAINLESS STEEL | STEEL | RoHS

Part number	Material	Finish	A	B	C	Note	Weight (g)
16-7-4023	steel	zinc plated	174	50	27	174 < A < 186	236
16-7-4030	304 stainless steel	raw	174	50	27	174 < A < 186	236

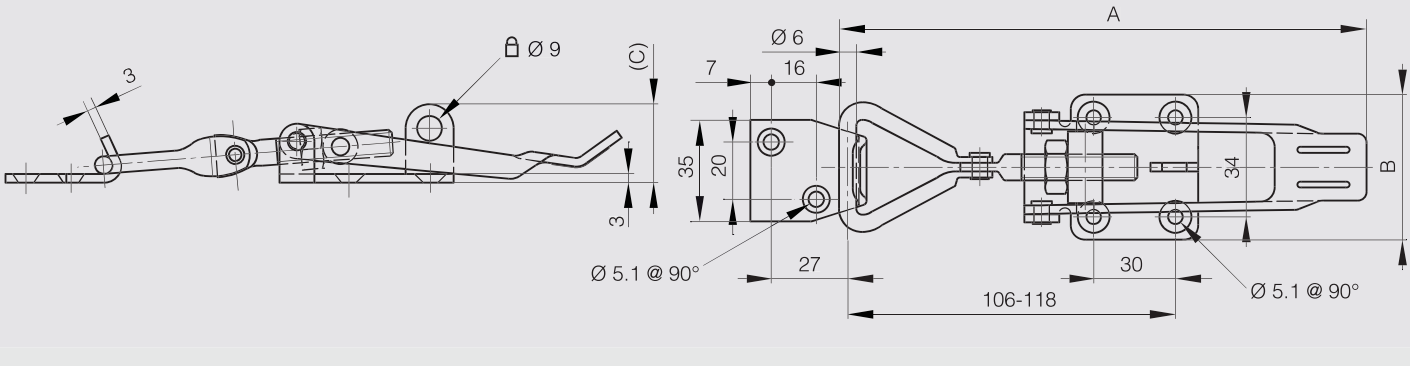

Spring loaded toggle latch without strike 35.8 mm

This small latch is used with strike part number 16-7-3907.

Part number	Material	Finish	A	B	C	Weight (g)
16-7-3906	304 stainless steel	raw	35.8	12.3	7.9	9

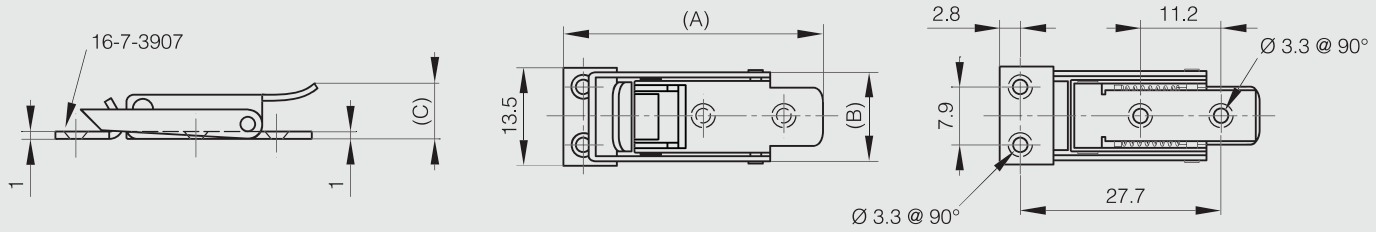

Strike for part number 16-7-3906

Part number	Material	Finish	Weight (g)
16-7-3907	304 stainless steel	raw	5

Spring loaded toggle latches without strike - 70.8 mm

STAINLESS STEEL STEEL RoHS

These latches are used with strike part numbers 16-7-3915 and 16-7-3916.

Part number	Material	Finish	A	B	C	Note	Weight (g)
16-7-3911	304 stainless steel	raw	70.8	28.7	10.2		50
16-7-3920	304 stainless steel	raw	70.8	28.7	10.2	with seal wire hole	50

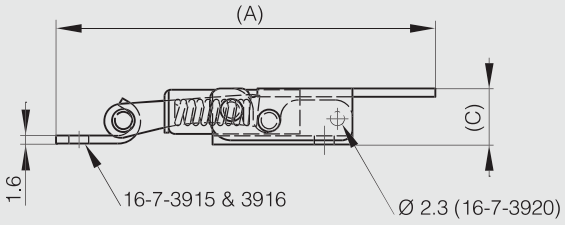

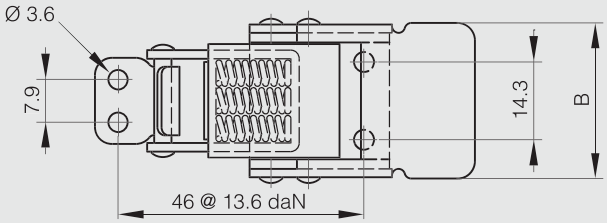

Spring loaded toggle latch without strike - with push button

STAINLESS STEEL RoHS

The push button prevents accidental opening.
This latch is used with strike part number 16-7-3916.
A padlockable option is available for part number 16-7-3917.

Part number	Material	Finish	A	B	C	Note	Weight (g)
16-7-3918	304 stainless steel	raw	70.9	28.7	14.7	with push button to open / no seal wire hole	50

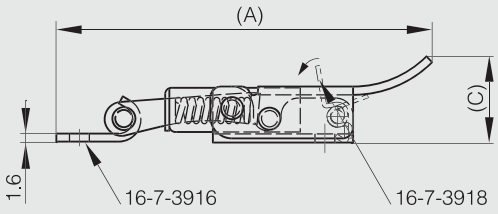

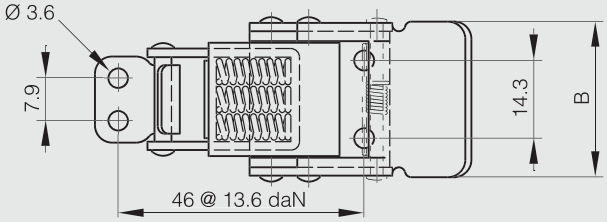

Strikes for part numbers 16-7-3911, 16-7-3918 and 16-7-3920

STAINLESS STEEL STEEL RoHS

Part number	Material	Finish	Weight (g)
16-7-3915	steel	zinc plated	5
16-7-3916	304 stainless steel	raw	5

Spring loaded toggle latches without strike - 52 mm

STAINLESS STEEL STEEL RoHS

These latches are used with strike part numbers 16-7-3739, 16-7-3741 and 16-7-3742.
Padlockable options are available for part numbers 16-7-3759 and 16-7-3760.

Part number	Material	Finish	A	B	C	Weight (g)
16-7-3735	steel	zinc plated	52	34.5	11.8	27
16-7-3736	304 stainless steel	raw	55.5	34.5	12	27

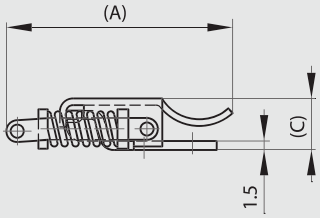

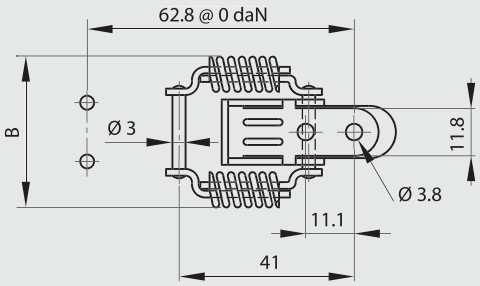

Strikes for part numbers 16-7-3735 and 16-7-3736

STAINLESS STEEL STEEL RoHS

Part number	Material	Finish	A	B	Note	Weight (g)
16-7-3741	steel	zinc plated	28.5	20.5	drilled	4
16-7-3739	304 stainless steel	raw	28.5	20.5	undrilled	4
16-7-3742	304 stainless steel	raw	28.5	20.5	drilled	4

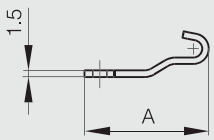

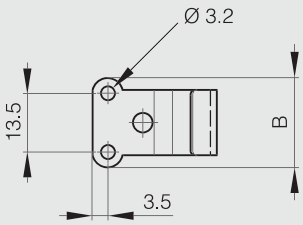

Spring loaded toggle latches without strike - 74 mm

STAINLESS STEEL STEEL RoHS

Dimension A (74 mm) without tension. Dimension A can be extended up to 4 mm putting the latch under tension.
These latches are used with strike part numbers 16-7-3751, 16-7-3753 and 16-7-3754.
Padlockable options are available for part numbers 16-7-3765 and 16-7-3766.

Part number	Material	Finish	A	B	C	Note	Weight (g)
16-7-3747	steel	zinc plated	74	46.5	15	drilled	70
16-7-3745	304 stainless steel	raw	74	47	15	undrilled	70
16-7-3748	304 stainless steel	raw	74	47	15	drilled	70

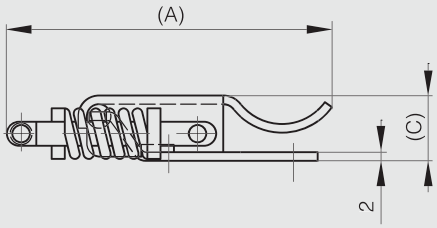

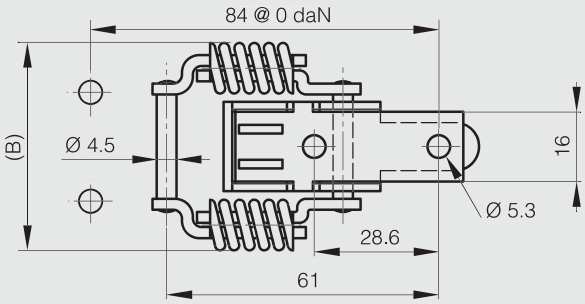

Strikes for part numbers 16-7-3745, 16-7-3747 and 16-7-3748

STAINLESS STEEL STEEL RoHS

Part number	Material	Finish	A	B	Note	Weight (g)
16-7-3753	steel	zinc plated	36	40	drilled	20
16-7-3751	304 stainless steel	raw	36	40	undrilled	20
16-7-3754	304 stainless steel	raw	36	40	drilled	20

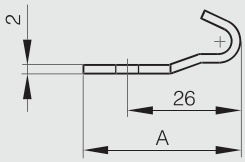

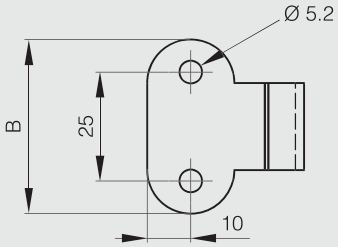

Spring loaded toggle latches without strike - 108 mm

STEEL

This latch is used with strike part numbers 16-7-3406, 16-1-4038 and 16-7-3870.

Part number	Material	Finish	A	B	C	Weight (g)
16-7-3400	steel	raw	108	49.5	19.5	118
16-7-3402	steel	zinc plated	108	49.5	19.5	118

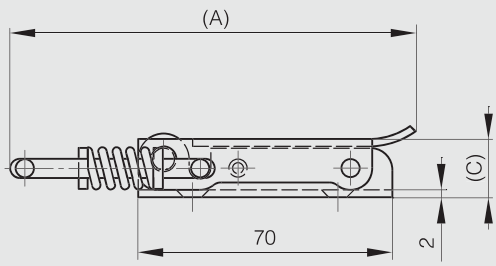

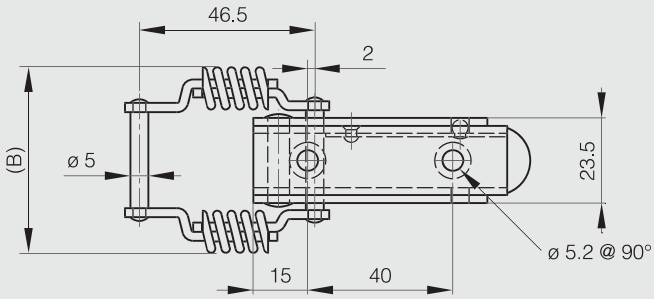

Strikes for part numbers 16-7-3400 and 16-7-3402

STEEL

Part number	Material	Finish	A	B	S	Weight (g)
16-7-3406	steel	zinc plated	85	25	5	57

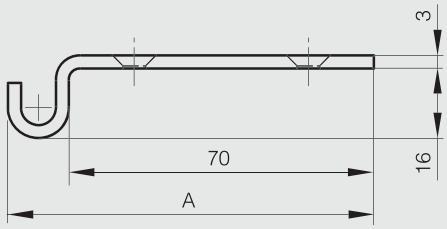

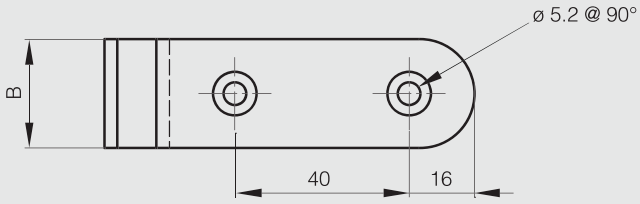

Other strikes for part numbers 16-7-3400 and 16-7-3402

Part number 16-7-3551 may also be used as an alternative strike.

STEEL RoHS

Part number	Material	Finish	A	B	C	F	G	S	Weight (g)
16-1-4038	steel	zinc plated	63	25	3	8.8	26	4.5	42
16-7-3870	steel	zinc plated	63.5	20	2	7.9	19	5.4	24

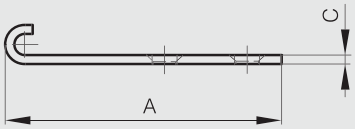

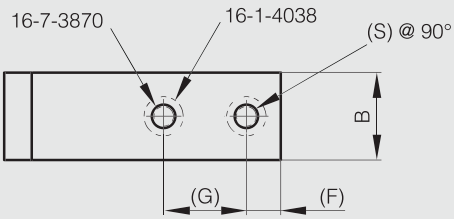

Adjustable toggle latches with secondary lock and strike

STAINLESS STEEL STEEL RoHS

Part number	Material	Finish	A	B	C	Weight (g)
16-1-9022	steel	zinc plated	70	27.5	13.5	77
16-1-9021	304 stainless steel	electropolished	70	27.5	13.5	77

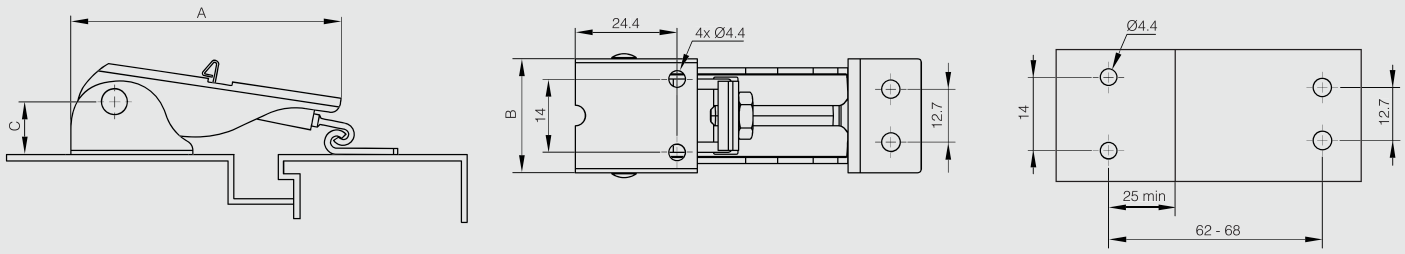

Adjustable toggle latch with strike - 60 mm

STEEL RoHS

Dimension A is adjustable from 60 mm to 65 mm.

Part number	Material	Finish	A	B	C	Note	Weight (g)
16-7-3839	steel	zinc plated	60	22	10	60 < A <65	36

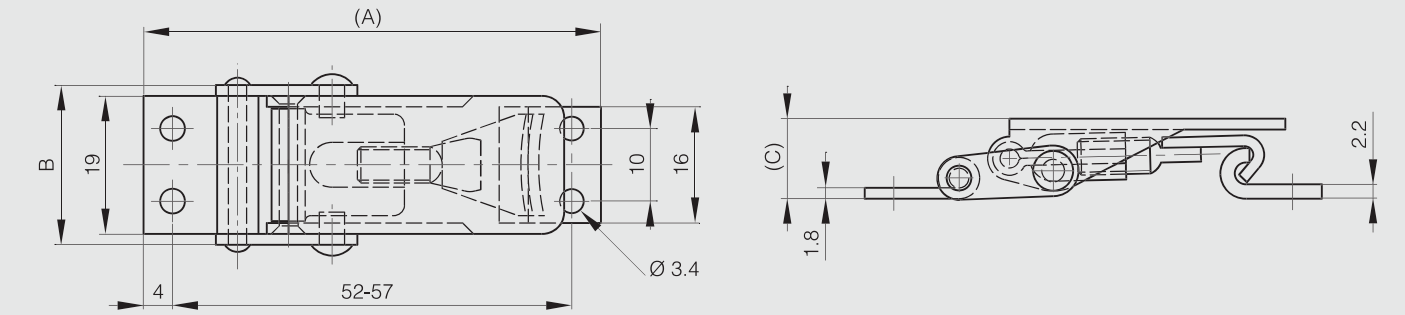

Adjustable toggle latches without strike 70.6 mm

STAINLESS STEEL STEEL

These latches are used with strike part numbers 16-7-3939 and 16-7-3940.
Part number 16-7-3934 has a lockable nut.

Part number	Material	Finish	A	B	C	Weight (g)
16-7-3934	steel	zinc plated	70.6	28.2	16	50
16-7-3933	304 stainless steel	raw	70.6	28.2	16	50

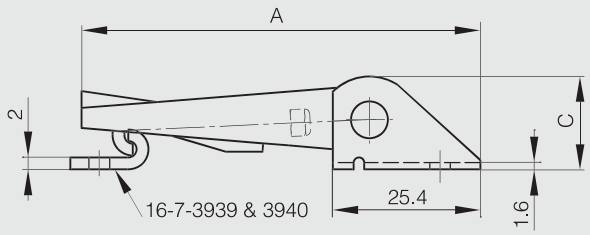

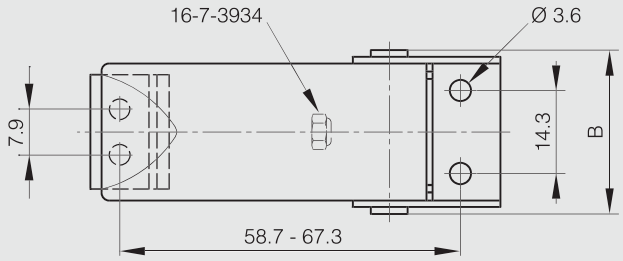

Strikes for part numbers 16-7-3932, 16-7-3933 and 16-7-3934

STAINLESS STEEL STEEL

Part number	Material	Finish	Weight (g)
16-7-3939	steel	zinc plated	5
16-7-3940	304 stainless steel	raw	5

Adjustable toggle latches with strike 82 mm and 103 mm long

STAINLESS STEEL STEEL RoHS

Part number	Material	Finish	A	B	C	C1	C2	D	E	F	G	H	J	S	Note	Weight (g)
16-7-4017	steel	zinc plated	82	28	14	2	2	4	14	5	10	52-59	18	4	82 < A <89	46
16-7-4019	steel	zinc plated	103	34	16	2.5	3	5	17	6.5	10	68-86	17	5.2	103 < A < 121	90
16-7-4024	304 stainless steel	raw	82	28	14	2	2	4	14	5	10	52-59	18	4	82 < A < 89	46
16-7-4026	304 stainless steel	raw	103	34	16	2.5	3	5	17	6.5	10	68-86	17	5.2	103 < A < 121	90

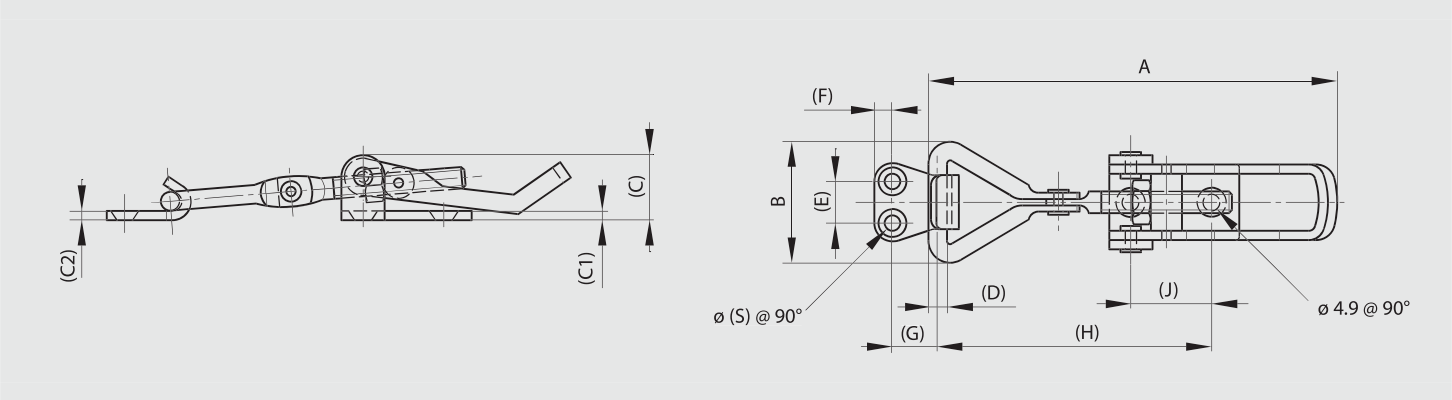

Adjustable toggle latches with strike 118 mm

STAINLESS STEEL STEEL RoHS

Part number	Material	Finish	A	B	C	Note	Weight (g)
16-7-4022	steel	zinc plated	118	40	18	118 < A < 128	130
16-7-4029	304 stainless steel	raw	118	40	18	118 < A < 128	130

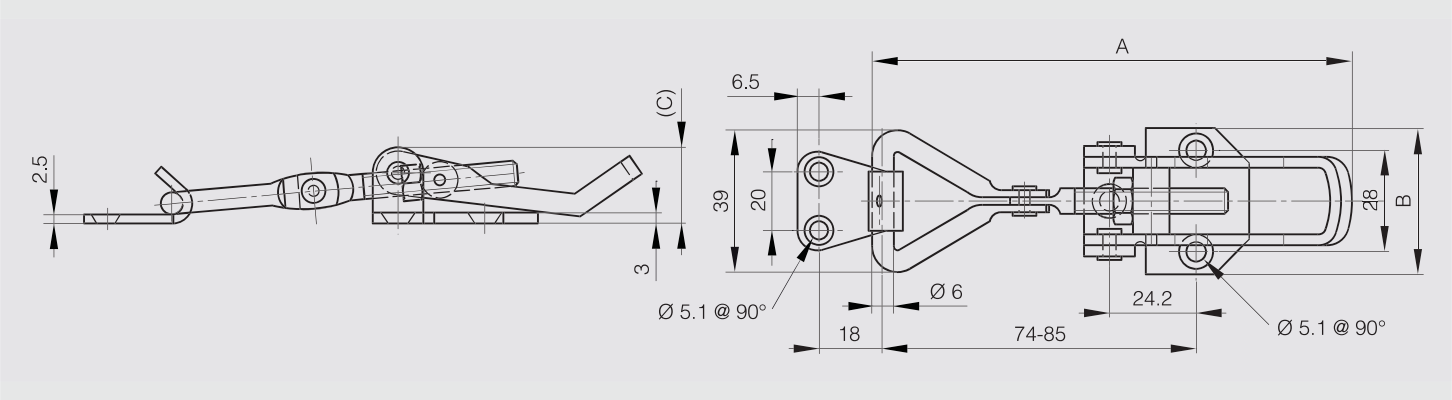

Adjustable toggle latches with strike 88 mm

STAINLESS STEEL RoHS

Part number	Material	Finish	A	B	C	Weight (g)
16-7-3844	304 stainless steel	raw	88	48.5	26	174

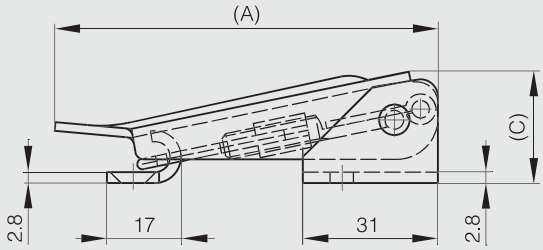

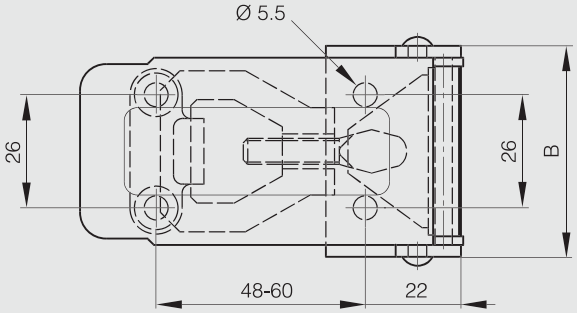

Adjustable toggle latch with strike - 135 mm

Dimension A is adjustable from 135 mm to 150 mm.

STEEL RoHS

Part number	Material	Finish	A	B	C	Note	Weight (g)
16-7-3842	steel	zinc plated	135	45.5	23	135 < A < 150	170

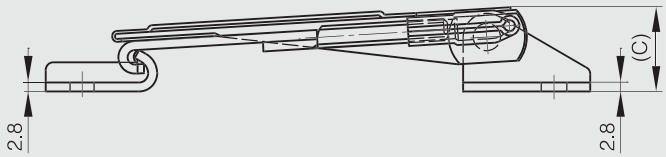

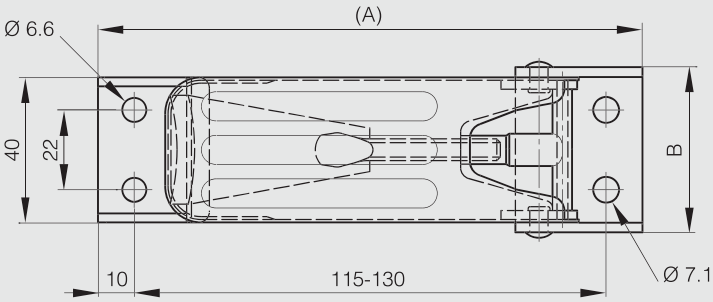

Adjustable toggle latches with strike 138 mm

STAINLESS STEEL STEEL RoHS

Dimension A is adjustable from 138 mm to 150 mm.

Part number	Material	Finish	A	B	C	Note	Weight (g)
16-7-3840	steel	zinc plated	138	52	18	138 < A < 150	100
16-7-3841	304 stainless steel	raw	138	52	18	138 < A < 150	100

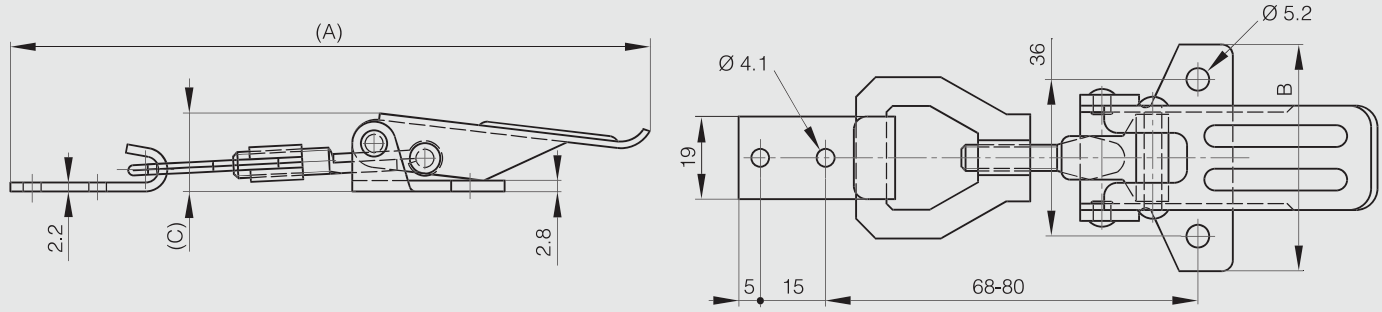

Adjustable toggle latches with secondary lock without strike

STAINLESS STEEL RoHS

Dimension A is adjustable from 115 mm to 122 mm.

Part number	Material	Finish	A	B	C	Note	Weight (g)
16-1-4231	304 stainless steel	raw	115	52	22	115 < A < 122	85

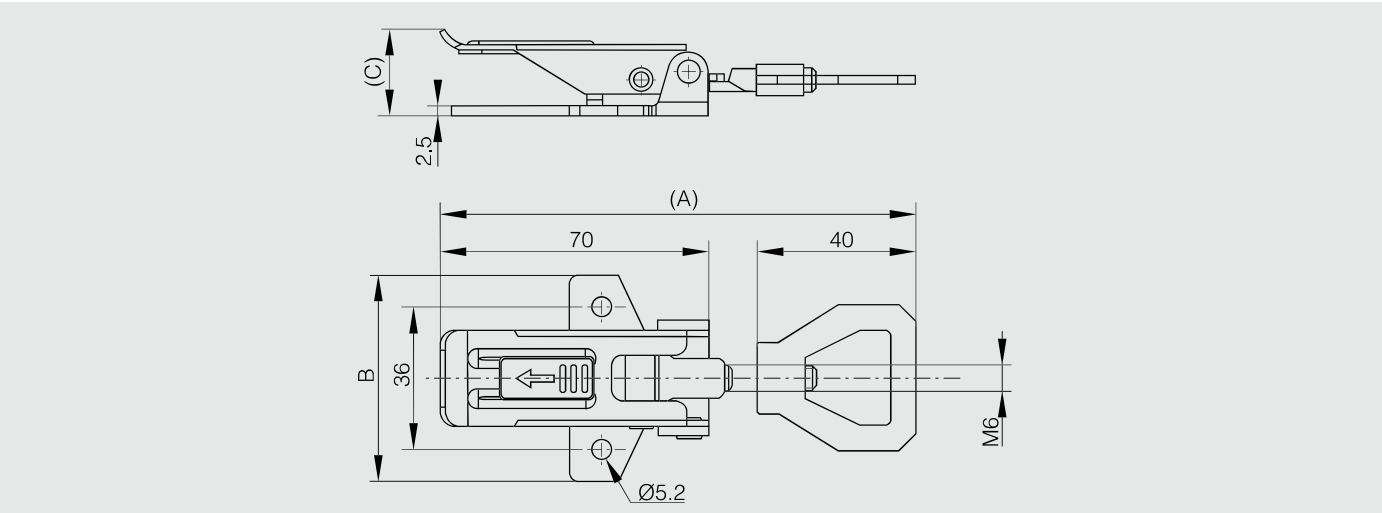

Strike for part number 16-1-4231

STAINLESS STEEL RoHS

Part number	Material	Finish	A	B	Weight (g)
16-1-4236	304 stainless steel	raw	67	57.9	35

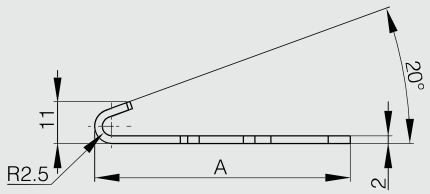

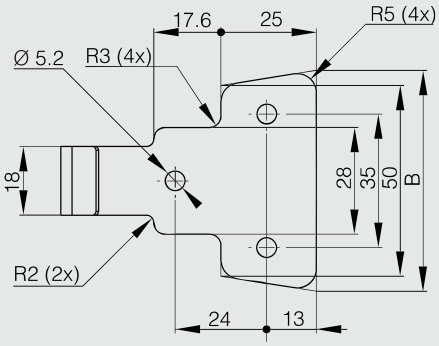

Other strikes for part number 16-1-4231

STAINLESS STEEL RoHS

Part number	Material	Finish	A	B	Note	Weight (g)
16-7-3751	304 stainless steel	raw	36	40	undrilled	20
16-7-3754	304 stainless steel	raw	36	40	drilled	20

Toggle latches without strikes

Mini toggle latch without strike - 30.5 mm

STEEL RoHS

Part number	Material	Finish	A	B	C	Weight (g)
16-1-4111	steel	zinc plated	30.5	15.4	6.5	4

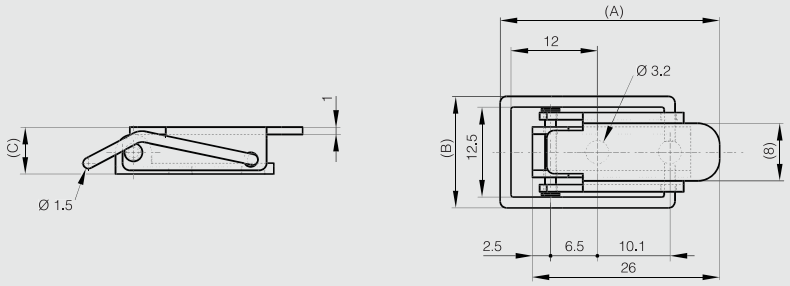

Toggle latch without strike 62.5 mm

STAINLESS STEEL RoHS

Part number	Material	Finish	A	B	C	Weight (g)
16-7-3900	304 stainless steel	raw	62.5	24.4	13.5	27

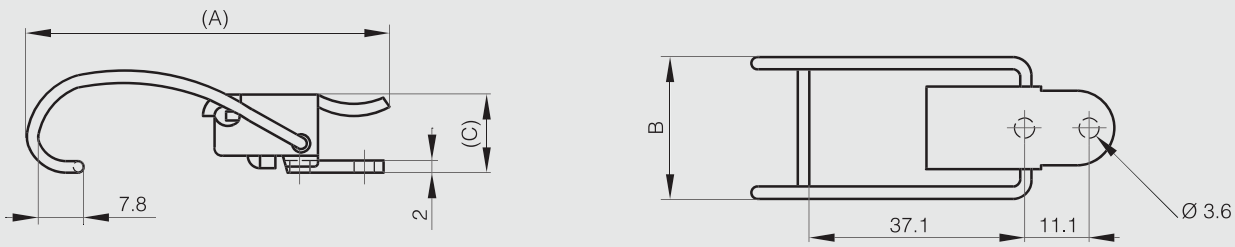

Toggle latch without strike - 63.6 mm

STEEL RoHS

Part number	Material	Finish	A	B	C	Weight (g)
16-7-3767	steel	black cataphoresis	63	22	11.8	20

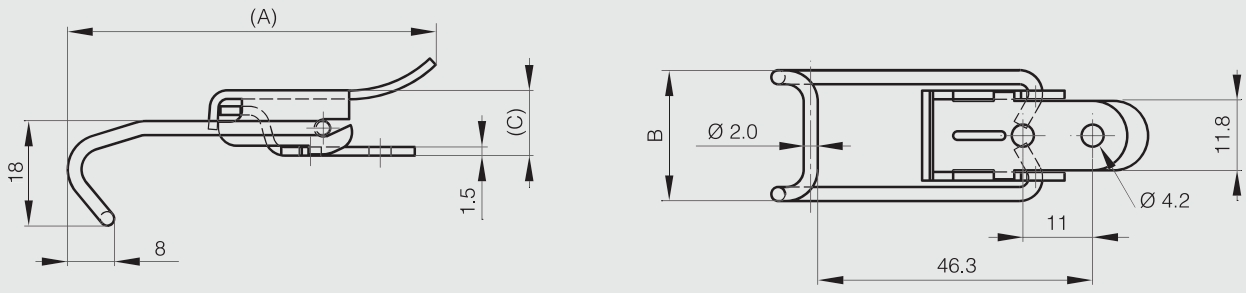

Toggle latches without strike - 64 mm

STAINLESS STEEL STEEL RoHS

Part number	Material	Finish	A	B	C	Weight (g)
16-7-3947	steel	zinc plated	64	28.7	14	45
16-7-3948	304 stainless steel	raw	64	28.7	14	45

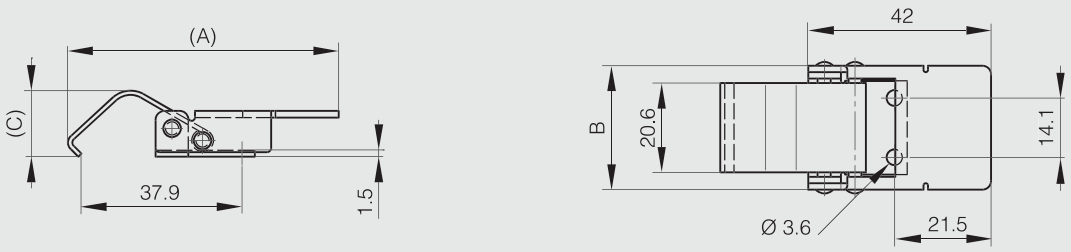

Toggle latches without strike - 67.6 mm

STAINLESS STEEL RoHS

Part number	Material	Finish	A	B	C	Weight (g)
16-7-3902	304 stainless steel	raw	67.6	25.4	13.7	32

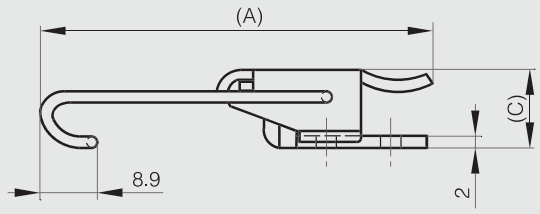

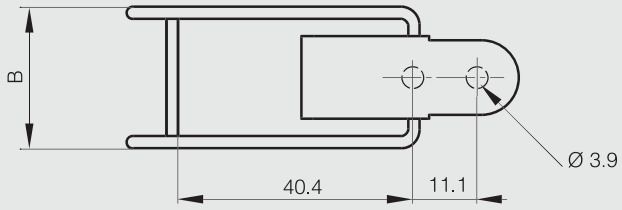

Toggle latch without strike - 73.5 mm

With seal wire hole.

STEEL RoHS

Part number	Material	Finish	A	B	C	Weight (g)
16-1-4130	steel	zinc plated	73.5	22	13	29

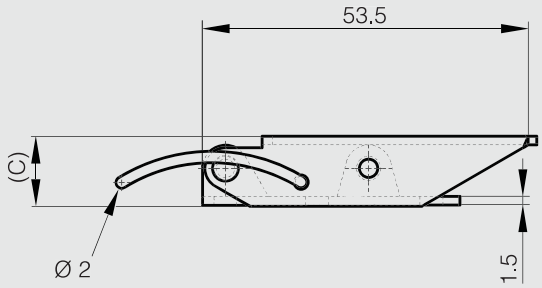

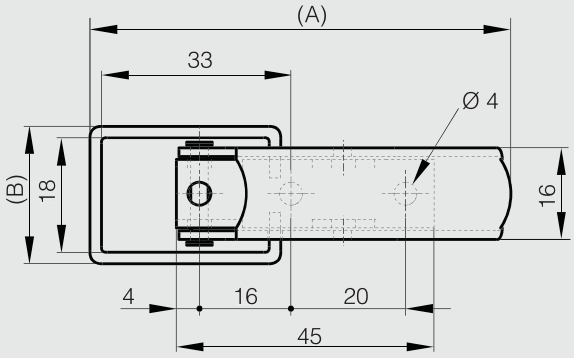

Toggle latch without strike - 106 mm

STEEL RoHS

Part number	Material	Finish	A	B	C	Weight (g)
16-7-3768	steel	black cataphoresis	106	47	19.5	42

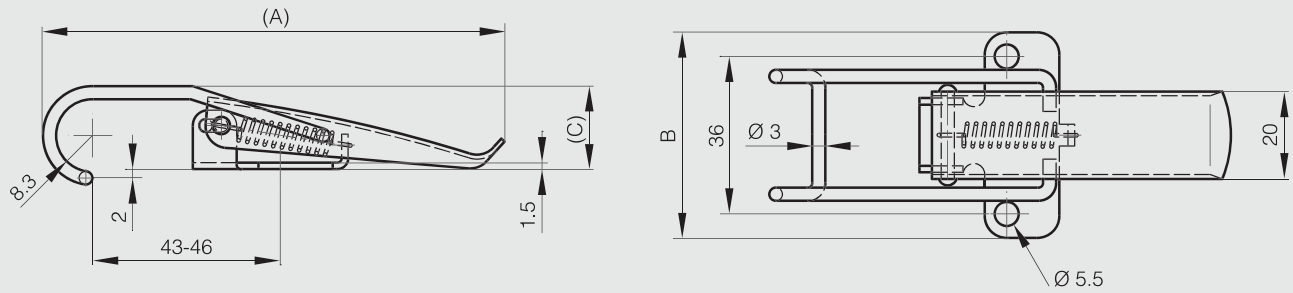

Hooked toogle latch without strike

STAINLESS STEEL RoHS

Part number	Material	Finish	A	B	C	Note	Weight (g)
16-1-4261	304 stainless steel	raw	80	27	32.1	80 < A < 107	82

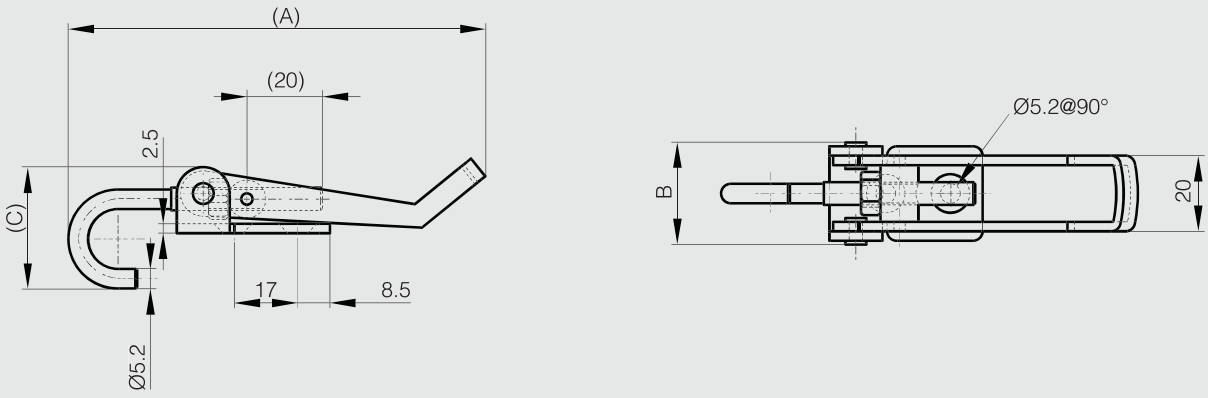

Notes

HANDLES

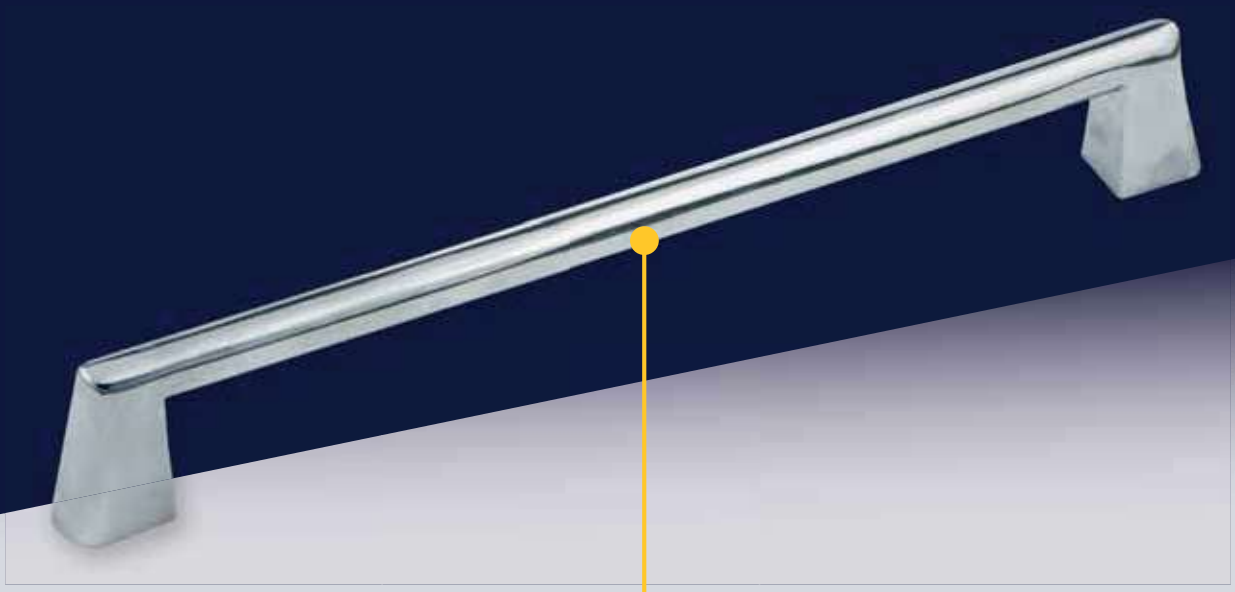

GRAB HANDLES

	Front mounted grab handles 107 mm in steel or stainless steel	328
	Front mounted grab handle 107 mm - zinc die-cast	328
	Front mounted grab handle 125 mm	329
	Front mounted grab handles 106 and 126 mm	329
	Front mounted grab handles 122 and 150 mm	330
	Rear mounted grab handles 50 mm	331
	Rear mounted grab handles 110 mm	331
	Rear mounted grab handles 92 and 108 mm	332
	Rear mounted grab handles 52 to 120 mm	332
	Rear mounted grab handles 95 to 150 mm	333
	Rear mounted grab handles 102 to 204 mm	333
	Rear mounted handles	334
	Rear mounted grab handles 92 to 200 mm	334
	Black aluminium rear mounted grab handles 75 to 150 mm	335
	Black aluminium rear mounted grab handles 88 to 120 mm	335
	Chrome plated rear mounted grab handle 90 mm	336
	Chrome plated zinc die-cast rear mounted grab handles 160 mm	336
	Moulded grab handle - rear mounted	337

DROP HANDLES

	Drop handles 96 x 61 mm - load 25 kg	338
	Drop handle 96 x 71 mm - load 25 kg	338
	Drop handle 104.8 x 73.7 mm load 90 kg	339
	Drop handles 140 x 87 mm - load 60 kg	339
	Drop handles- load 35 kg or 45 kg	340
	Drop handle with chamfered angles - load 35 kg	340
	Drop handle 130 x 80 mm - load 68 kg	341
	Black steel folding handle	341
	Folding handles with stop in open position	342
	Spring loaded handles 110 mm - load 25 kg	343

	Spring loaded handles - load 34 kg - 180° opening	343
	Spring loaded handles 130 mm - load 45 kg	344
	Spring loaded handles 130.3 mm - load 45 kg	344
	Spring loaded handle 130 mm - load 54 kg	345
	Spring loaded handles 130 mm - load 68 kg	345
	Recessed spring loaded drop handles 155.5 mm - load 57 kg	346
	Recessed spring loaded drop handles 177.8 mm - load 68 kg	346

FLUSH HANDLES

	Flush handles 105 x 63.5 mm	347
	Flush handle 120 x 91 mm	347
	Flush handle 150 x 105 mm	348
	Flush handle 194 x 76 mm	348
	Retractable flush handles in stainless steel	349
	Screw-on flush handle 101 x 52 mm	349
	Screw-on flush handle 131 x 79 mm	350
	Screw-on recessed grab handle	350
	Bolt-on flush handle 120 x 60 mm	351
	Bolt-on flush handle 120 x 62 mm	351
	Bolt-on flush handle 138 x 88 mm	352
	Recessed handle in elastomer	353
	Snap-in flush handle 90 x 40 mm	353
	Snap-in flush handles 137.4 x 37.4 mm or 140 x 36 mm	354
	Flush handle with fixing clips 110 x 56.3 mm	355
	Flush handle with fixing clips 187 x 79 mm	355

Front mounted grab handles 107 mm in steel or stainless steel

STAINLESS STEEL STEEL RoHS

Handle made from galvanised steel is pregalvanised. Therefore any cut surface is ungalvanised.

Part number	Material	Finish	A	B	C	F	Weight (g)
19-1-3807	galvanised steel	raw	107	21	15	120	32
19-1-3797	304 stainless steel	deburred	107	21	15	120	32

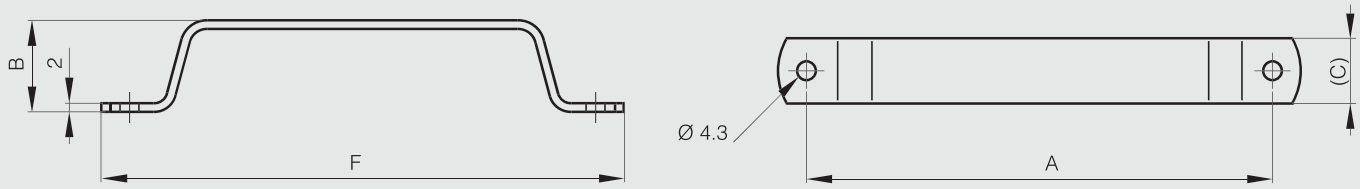

Front mounted grab handle 107 mm - zinc die-cast

ZAMAK RoHS

Part number	Material	Finish	A	B	C	F	Weight (g)
19-7-3639	zinc die-cast	chrome plated	107	22	14	120	40

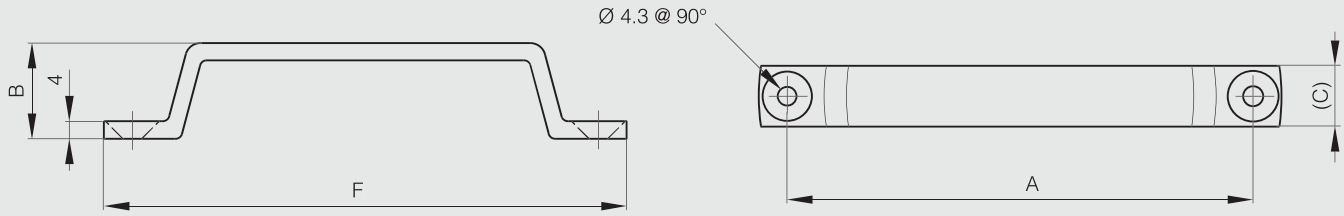

Front mounted grab handle 125 mm

STEEL

Part number	Material	Finish	A	B	F	Weight (g)
19-7-3343	steel	zinc plated	125	38	140	68

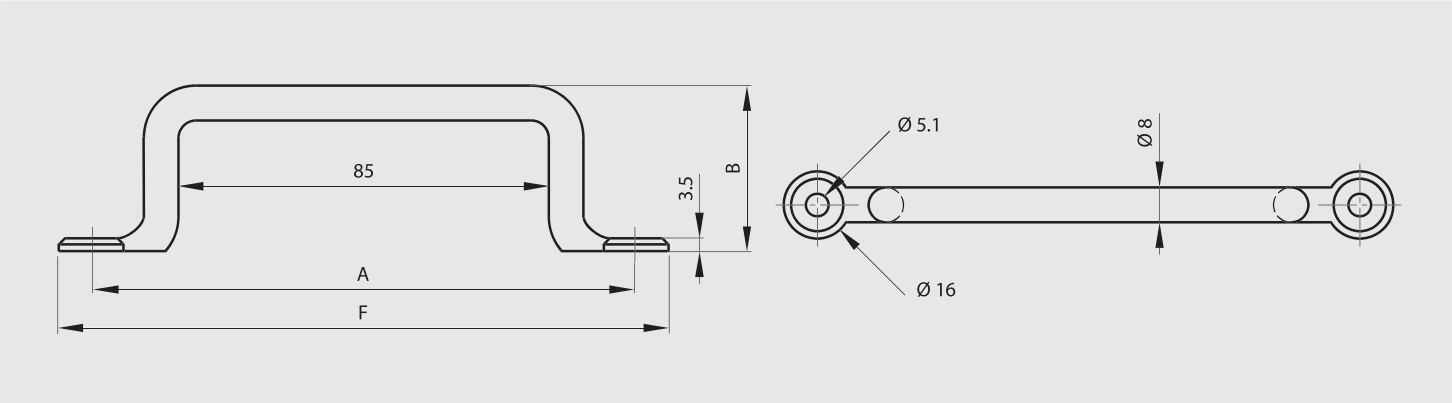

Front mounted grab handles 106 and 126 mm

Complete with wood screws.

STAINLESS STEEL RoHS

Part number	Material	Finish	A	B	C	D	E	F	G	H	S	Weight (g)
19-7-3694	304 stainless steel	mirror polished	106	27	36	7	5	120	24	12	4.1	131
19-7-3695	304 stainless steel	mirror polished	126	33	45	8	6	150	30	15	5.3	242

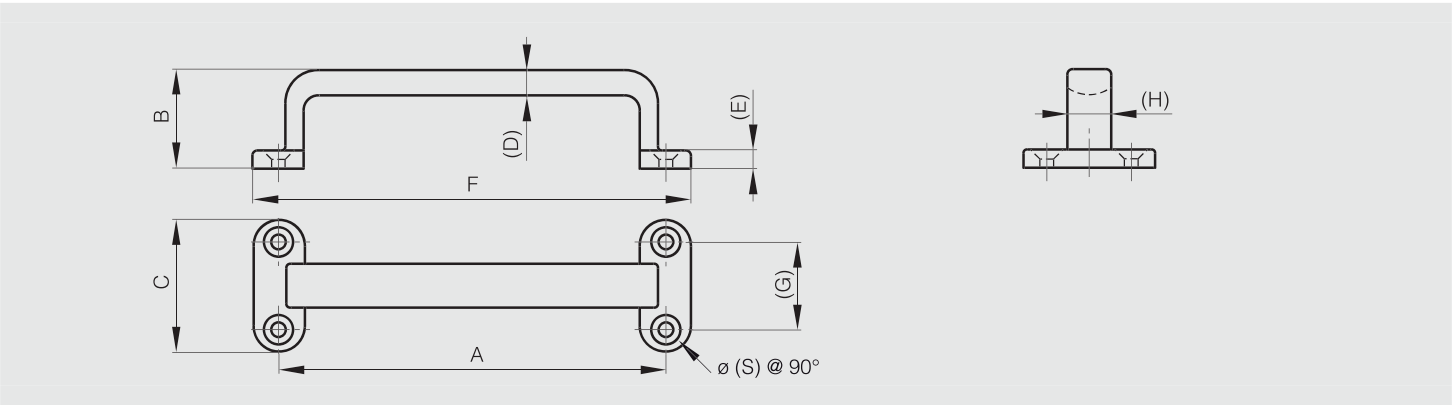

Front mounted grab handles 122 and 150 mm

POLYMER RoHS

Part number	Material	Finish	A	B	C	D	E	F	Weight (g)
87-7-2201	polyamide	matt black	122	40	26	8	12	142	42
87-7-2203	polyamide	matt black	150	52	28	10	13	170	71

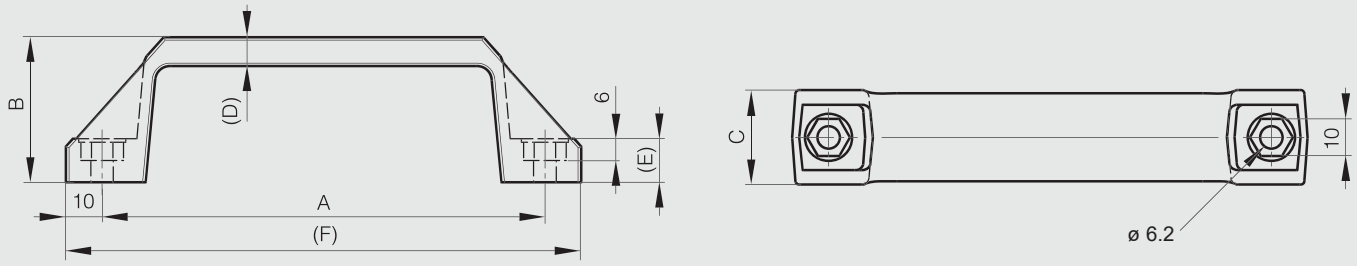

Rear mounted grab handles 50 mm

STEEL RoHS

Part number	Material	Finish	A	B	C	Weight (g)
19-1-3798	steel	chrome plated	50	25	35	46

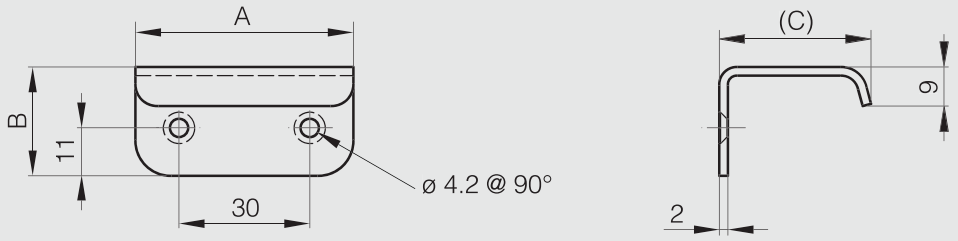

Rear mounted grab handles 110 mm

STAINLESS STEEL RoHS

Part number	Material	Finish	A	B	D	L	M	Weight (g)
19-1-3424	304 stainless steel	polished	110	35	8	11	5	61

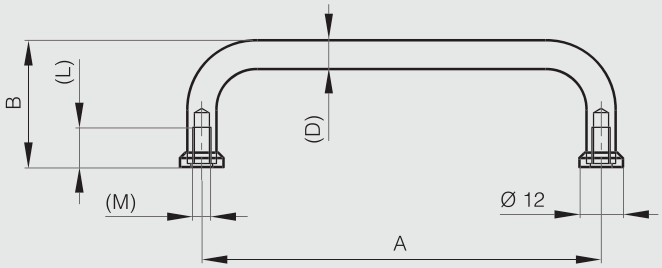

Rear mounted grab handles 92 and 108 mm

ALU RoHS

Part number	Material	Finish	A	B	D	L	M	Weight (g)
19-1-3425	aluminium	polished	92	32	10	10	5	26
19-1-3672	aluminium	polished	108	39	10	10	4	30

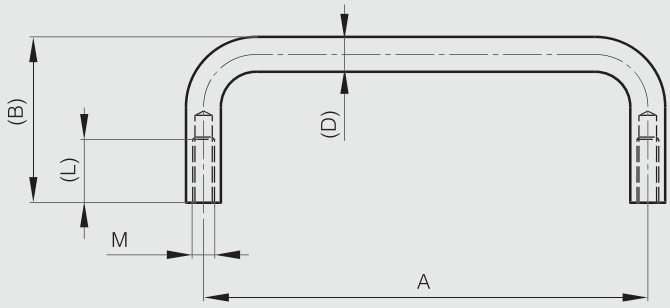

Rear mounted grab handles 52 to 120 mm

BRASS ALU RoHS

Part number	Material	Finish	A	B	D	L	M	Weight (g)
19-7-3683	aluminium	clear anodised	52	34	8	10	4	14
19-7-3684	aluminium	clear anodised	80	34	8	12	4	17
19-7-3685	aluminium	clear anodised	100	34	8	12	4	20
19-7-3686	aluminium	clear anodised	120	34	8	10	4	23
19-7-3409	aluminium	polished	100	30	7	8	4	14
19-7-3410	brass	chrome plated	100	30	7	8	4	44
19-7-3411	brass	nickel plated	100	30	7	8	4	44

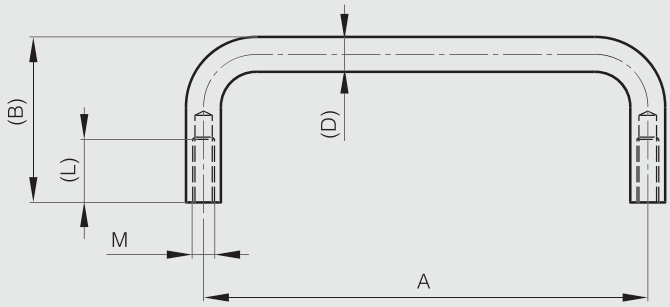

Rear mounted grab handles 95 to 150 mm

STAINLESS STEEL

For use with M4 screws (included).

Part number	Material	Finish	A	B	D	L	M	Weight (g)
19-7-3701	304 stainless steel	mirror polished	95	28	9	8	4	76
19-7-3700	304 stainless steel	mirror polished	120	28	9	8	4	88
19-7-3699	304 stainless steel	mirror polished	150	28	9	8	4	103

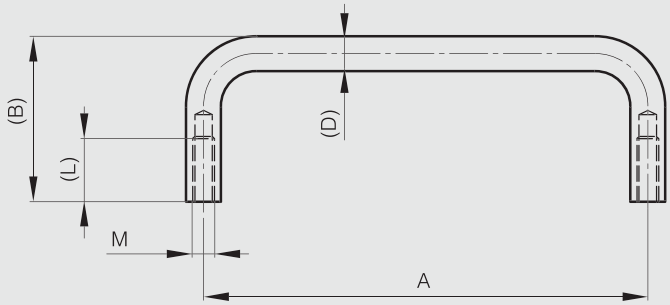

Rear mounted grab handles 102 to 204 mm

STEEL RoHS

Part number	Material	Finish	A	B	D	L	M	Weight (g)
19-1-3569	steel	chrome plated	102	38	8	14	5	70
19-1-3570	steel	chrome plated	153	38	8	14	5	90
19-1-3571	steel	chrome plated	204	38	8	14	5	105

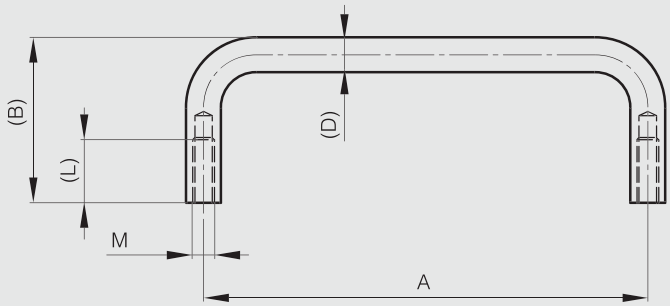

Rear mounted handles

BRASS RoHS

Part number	Material	Finish	A	B	Weight (g)
19-1-3390	brass	chrome plated	160	50	114

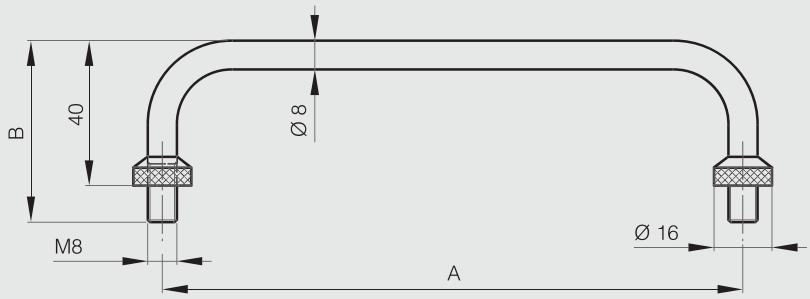

Rear mounted grab handles 92 to 200 mm

STAINLESS STEEL

Complete with M5 screws for 304 stainless steel version (included).

Part number	Material	Finish	A	B	C	D	L	Weight (g)
19-1-3833	316 stainless steel	mirror polished	92	32	14.8	7.8	10	120
19-7-3696	304 stainless steel	mirror polished	100	40	14	8	11	120
19-1-3834	316 stainless steel	mirror polished	110	32	14.8	7.8	10	120
19-7-3697	304 stainless steel	mirror polished	150	50	14	8	11	174
19-7-3698	304 stainless steel	mirror polished	200	50	14	8	11	210

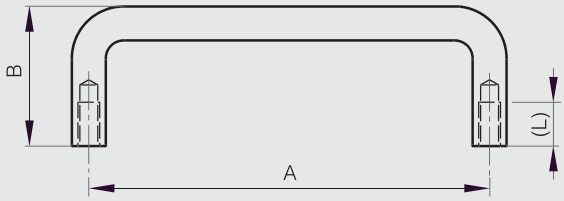

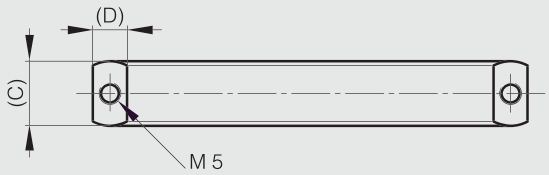

Black aluminium rear mounted grab handles 75 to 150 mm

ALU RoHS

Part number	Material	Finish	A	B	C	Weight (g)
19-1-9001	aluminium	black painting	75	38	16	34
19-1-9002	aluminium	black painting	100	38	16	45
19-1-9003	aluminium	black painting	150	38	16	68

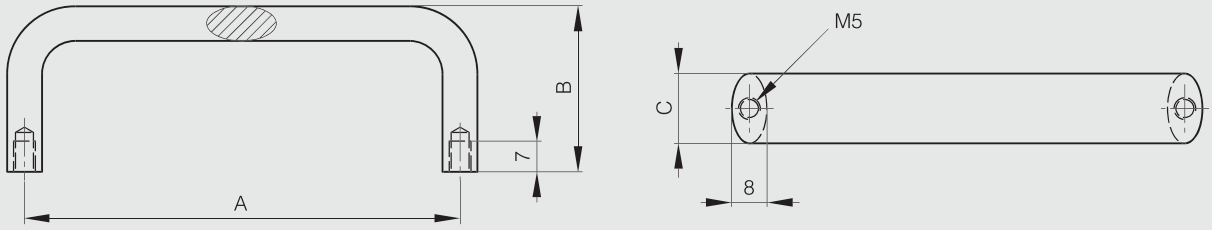

Black aluminium rear mounted grab handles 88 to 120 mm

ALU RoHS

Part number	Material	Finish	A	B	F	Weight (g)
19-7-3644	aluminium	matt black	88	40	102	50
19-7-3645	aluminium	matt black	120	40	134	60

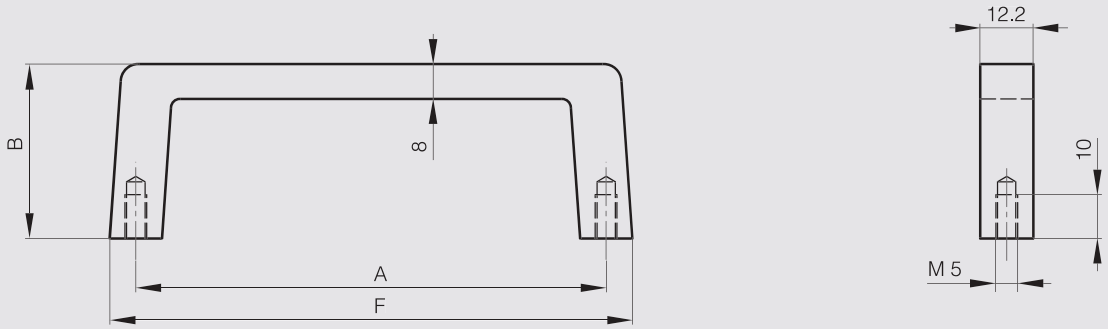

Chrome plated rear mounted grab handle 90 mm

ZAMAK RoHS

Part number	Material	Finish	A	B	F	Weight (g)
19-7-3426	zinc die-cast	chrome plated	90	33	99	53

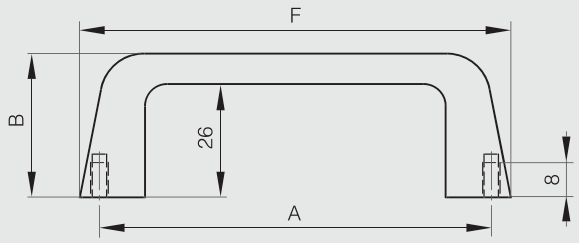

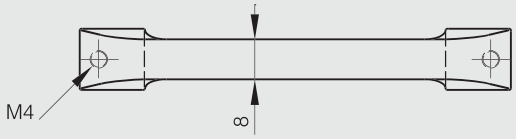

Chrome plated zinc die-cast rear mounted grab handles 160 mm

ZAMAK RoHS

Part number	Material	Finish	A	B	F	Weight (g)
19-7-3385	zinc die-cast	chrome plated	160	26	174	84
19-7-3387	zinc die-cast	matt black	160	26	174	84

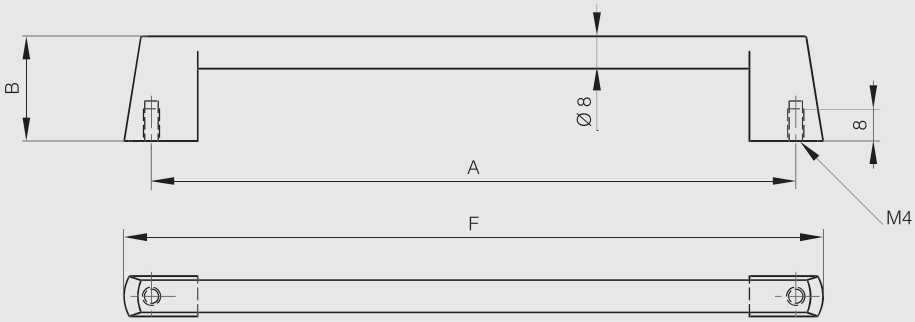

Moulded grab handle - rear mounted

POLYMER RoHS

Part number	Material	Finish	A	B	C	F	Weight (g)
19-1-9000	polymer	black	132	55	25	160	86

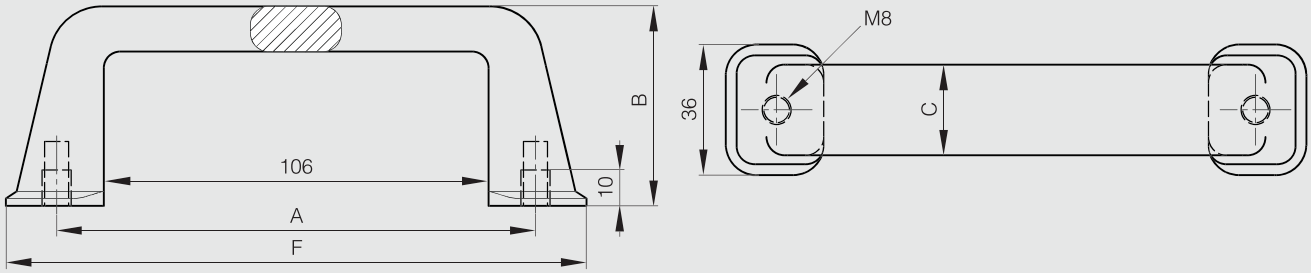

Drop handles 96 x 61 mm - load 25 kg

STEEL

Maximum load: 25 kg.
With 80° stop.

Part number	Material	Finish	A	B	C	Note	Weight (g)
19-7-3339	steel	raw	96	63	34	undrilled	77
19-7-3637	steel	zinc plated	96	63	34	drilled	77

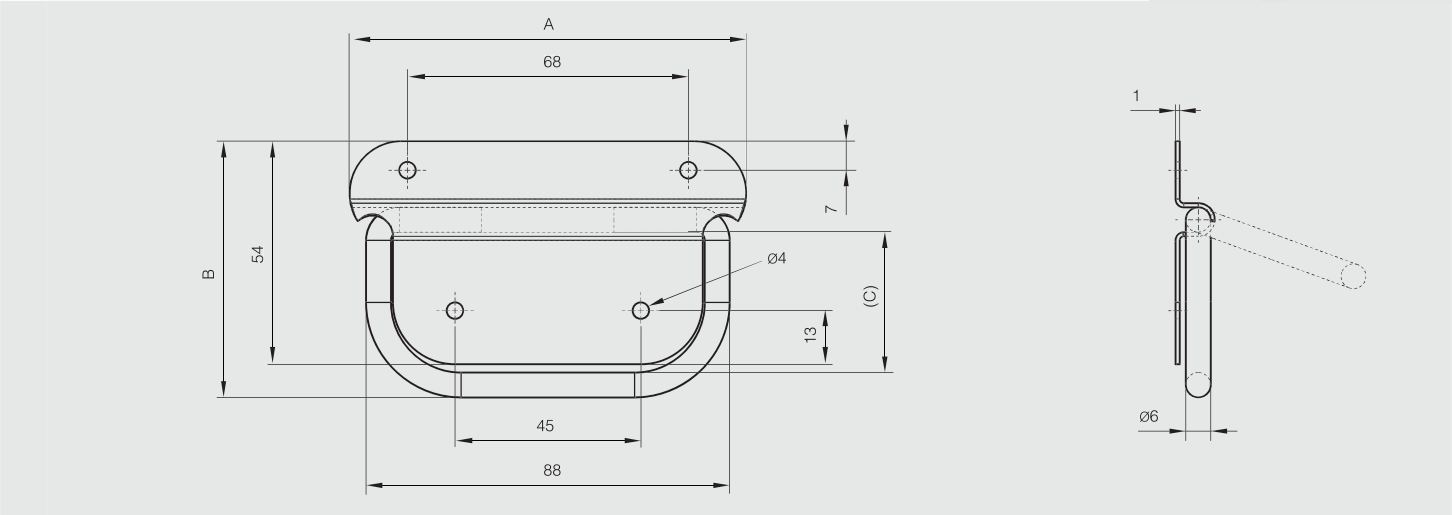

Drop handle 96 x 71 mm - load 25 kg

STEEL

Maximum load: 25 kg.
With 80° stop.

Part number	Material	Finish	A	B	C	Note	Weight (g)
19-7-3633	steel	zinc plated	96	72	45	drilled	107

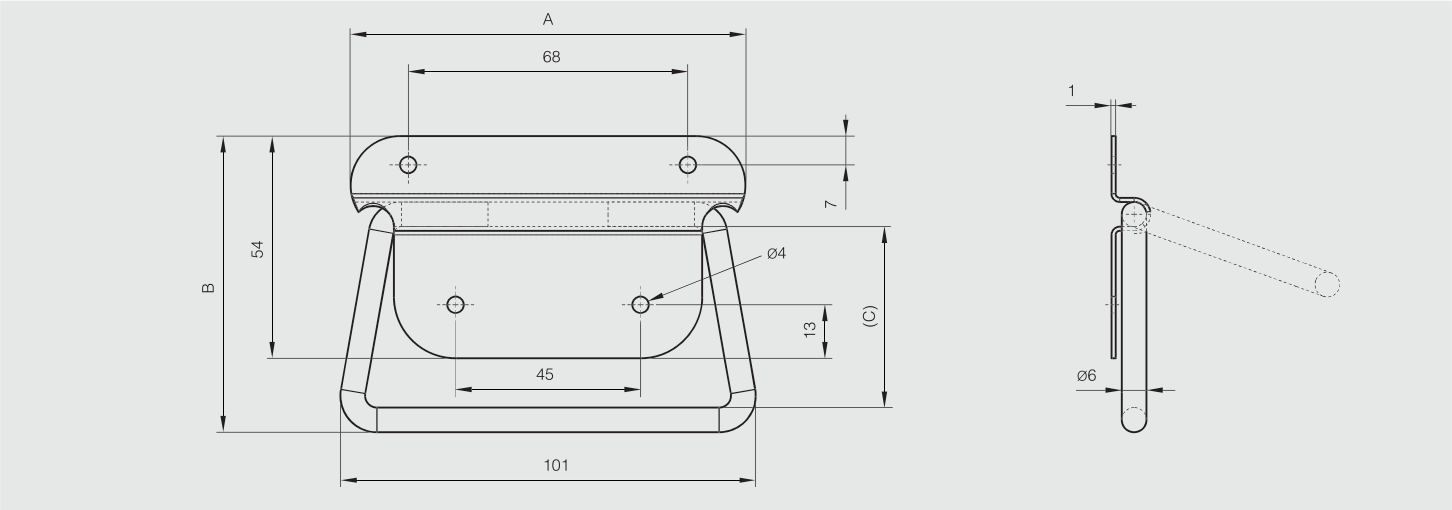

Drop handle 104.8 x 73.7 mm - load 90 kg

STEEL

Maximum load: 90 kg.
With 90° stop.

Part number	Material	Finish	A	B	C	Weight (g)
19-7-3721	steel	zinc plated	104.8	73.7	34.9	181

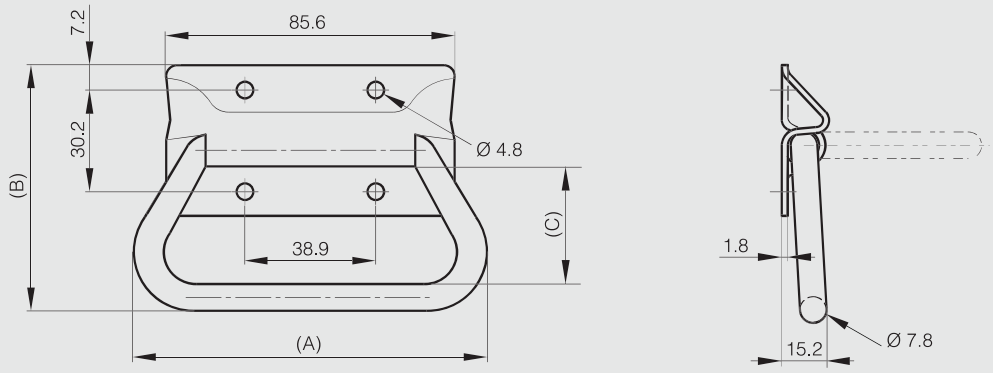

Drop handles 140 x 87 mm - load 60 kg

STEEL

Maximum load: 60 kg.
With 80° stop.

Part number	Material	Finish	A	B	C	Note	Weight (g)
19-7-3341	steel	raw	118	80	34	undrilled	180
19-7-3638	steel	zinc plated	118	80	34	drilled	180

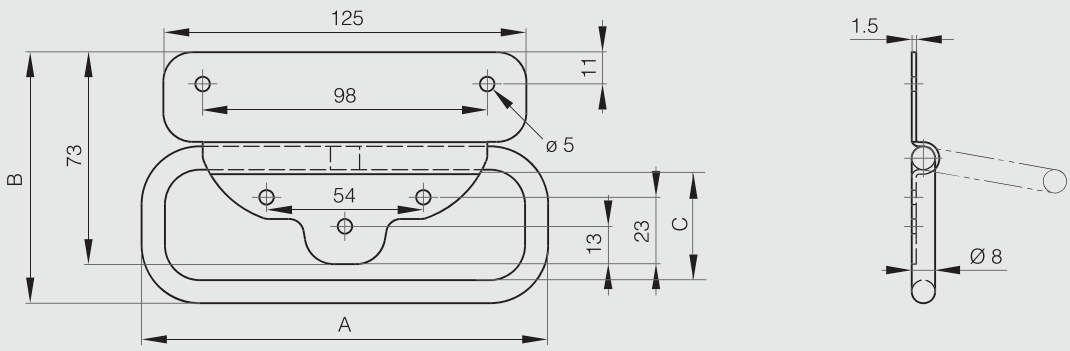

Drop handles - load 35 kg or 45 kg

With 90° stop.

STEEL

Part number	Material	Finish	A	B	C	D	E	S	Note	Weight (g)
19-7-3515	steel	zinc plated	142	45	120	75	8	5.2	load: 35 kg	115
19-7-3535	steel	zinc plated	160	46	138	94	8	5.2	load: 45 kg	142
19-7-3649	steel	zinc plated	187	49.6	162	109	8	5.2	load: 45 kg	155

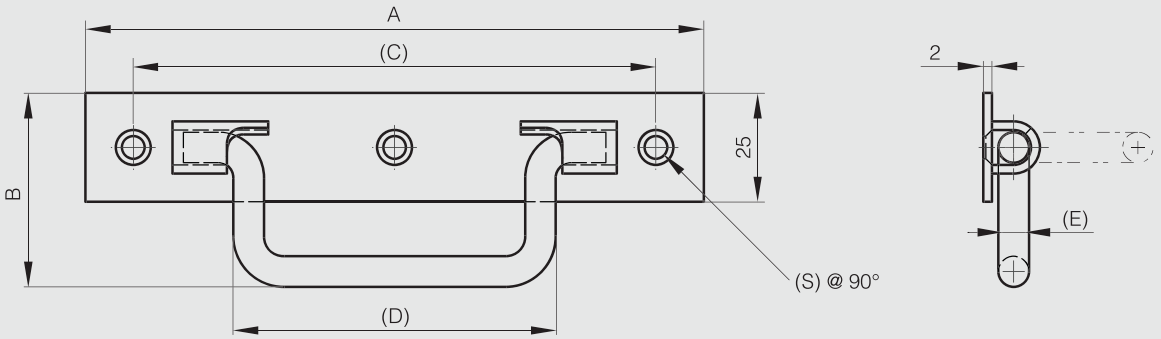

Drop handle with chamfered angles - load 35 kg

With 90° stop.

STAINLESS STEEL RoHS

Part number	Material	Finish	A	B	C	D	E	S	Note	Weight (g)
19-7-3690	304 stainless steel	raw	158	54	130	89	7	5.2	load: 35 kg / chamfremed angles	120

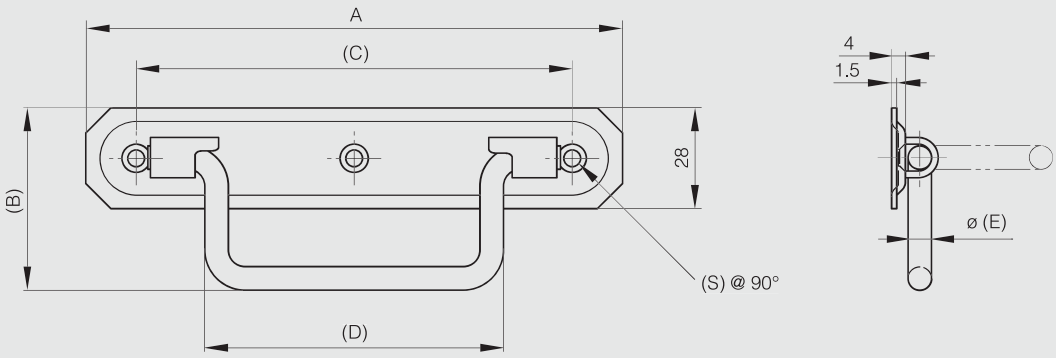

Drop handle 130 x 80 mm - load 68 kg

STEEL

Maximum load: 68 kg.
With 180° stop.
Rubber grip in neoprene.

Part number	Material	Finish	A	B	C	Weight (g)
19-7-3706	steel	zinc plated	130	80	38.1	227

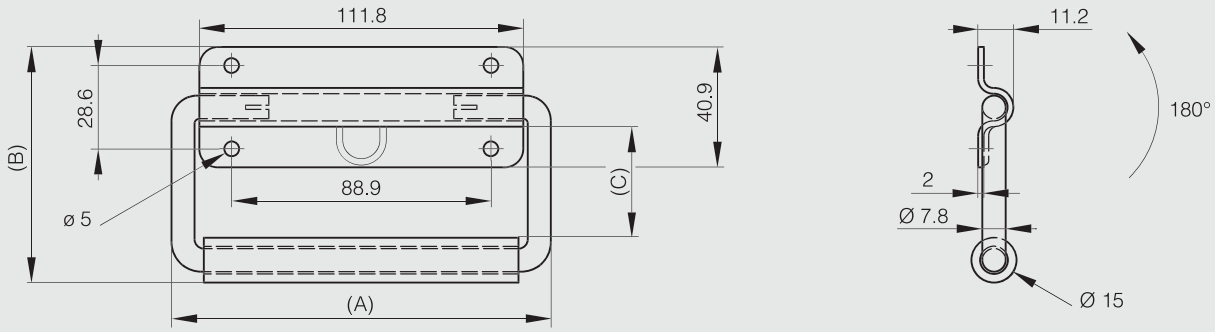

Black steel folding handle

STEEL RoHS

Part number	Material	Finish	A	B	Weight (g)
19-1-9006	steel	black epoxy	101.5	37.5	54

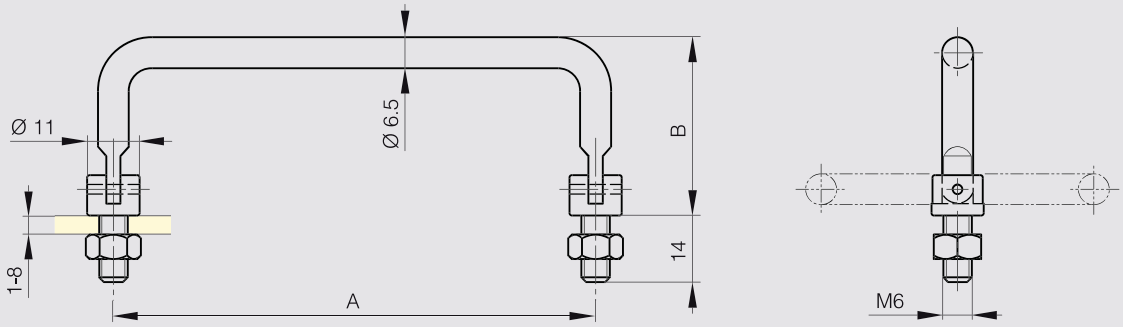

Folding handles with stop in open position

With 90° stop and position control.

STEEL RoHS

Part number	Material	Finish	A	B	Weight (g)
19-1-9004	steel	chrome plated	100	41.5	120
19-1-9005	steel	chrome plated	135	41.5	150

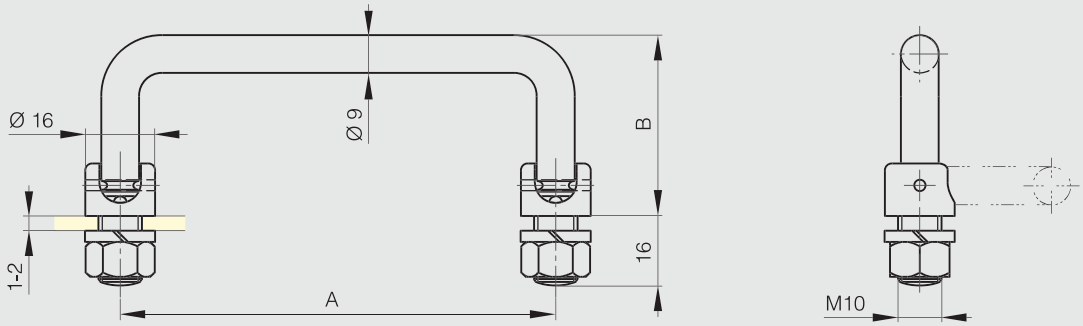

Spring loaded handles 110 mm - load 25 kg

STEEL

Maximum load: 25 kg.
With 70° stop.

Part number	Material	Finish	A	B	C	Weight (g)
19-7-3641	steel	zinc plated	110	87	50.5	210

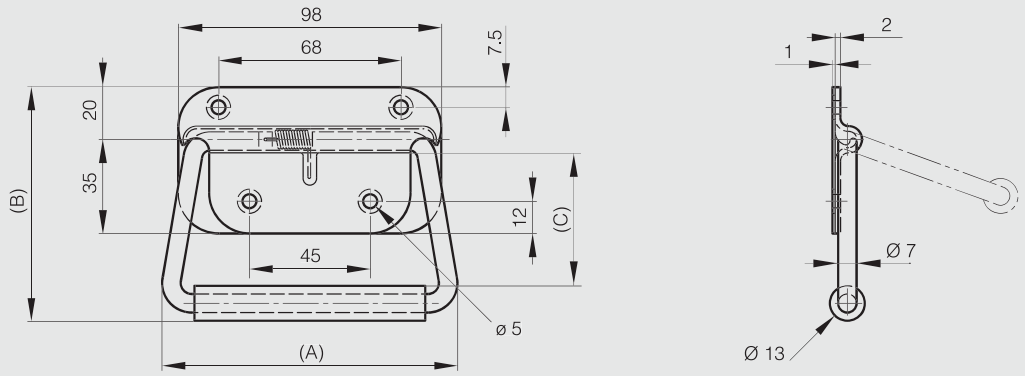

Spring loaded handles - load 34 kg - 180° opening

STAINLESS STEEL | STEEL | RoHS

Maximum load: 34 kg.
With 180° stop.
Rubber grip in EPDM.
Produced mainly in stainless steel, for a complete description of the materials contact us.

Part number	Material	Finish	A	B	C	Weight (g)
19-7-3710	steel	black epoxy	130	75.4	46	227
19-7-3711	304 stainless steel	passivated	130	75.4	46	227

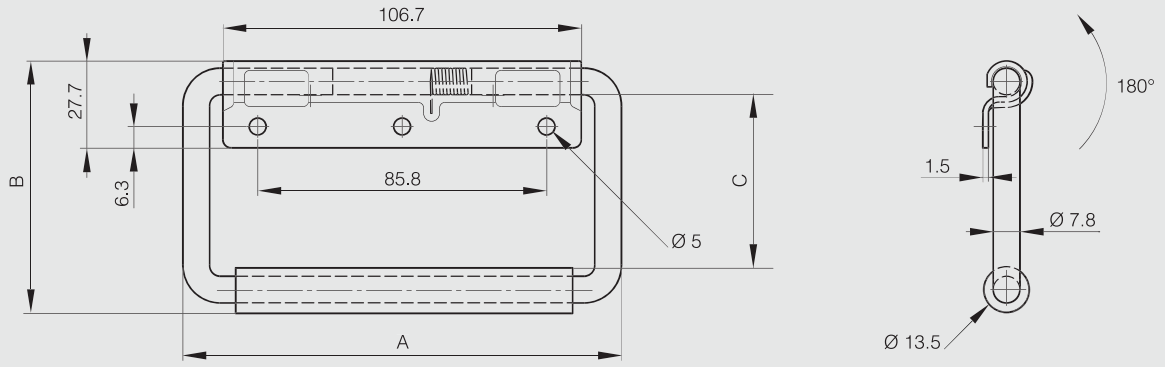

Spring loaded handles 130 mm - load 45 kg

STEEL

Maximum load: 45 kg.
With 90° stop.
Rubber grip.

Part number	Material	Finish	A	B	C	D	Weight (g)
19-7-3733	steel	zinc plated	130	81.3	48.3	15	226

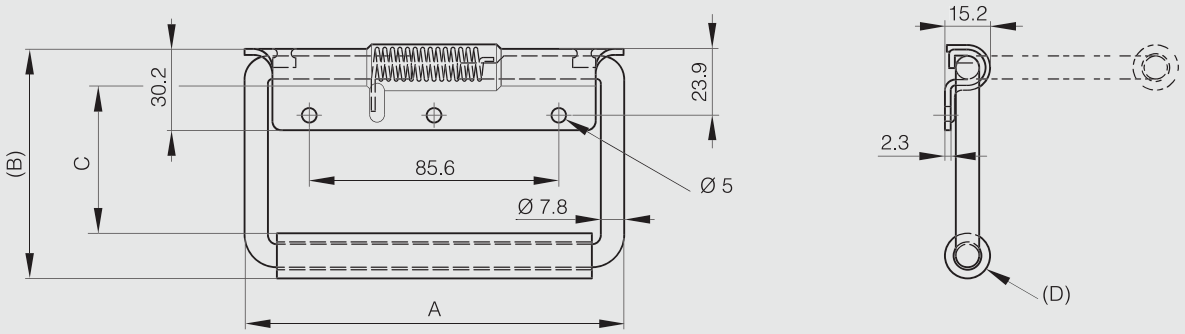

Spring loaded handles 130.3 mm - load 45 kg

STAINLESS STEEL STEEL

Maximum load: 45 kg.
With 90° stop.
Rubber grip.
Produced mainly in stainless steel, for a complete description of the materials contact us.

Part number	Material	Finish	A	B	C	E	Weight (g)
19-7-3745	steel	zinc plated	130.3	82.6	38.1	39.6	215
19-7-3740	steel	zinc plated	130.3	104.1	60.4	39.6	232
19-7-3746	304 stainless steel	raw	130.3	82.6	38.1	41.9	217
19-7-3741	302 stainless steel	raw	130.3	104.1	60.4	41.9	237

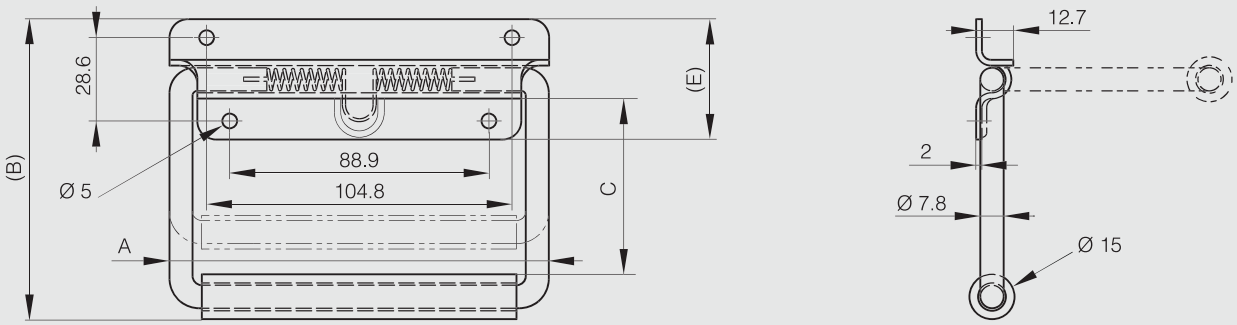

Spring loaded handle 130 mm - load 54 kg

STAINLESS STEEL RoHS

Maximum load: 54 kg.
With 90° stop.
A special aluminium sleeve located between the rubber grip and the bail assures the grip will not ride up on the bail during lifting. Adds comfort and durability.
Fungus resistant neoprene.
Meets military specifications MIL.T.945, MIL.C.4150.
Produced mainly in stainless steel, for a complete description of the materials contact us.

Part number	Material	Finish	A	B	C	Weight (g)
19-7-3725	304 stainless steel	raw	130	112.7	50.8	317

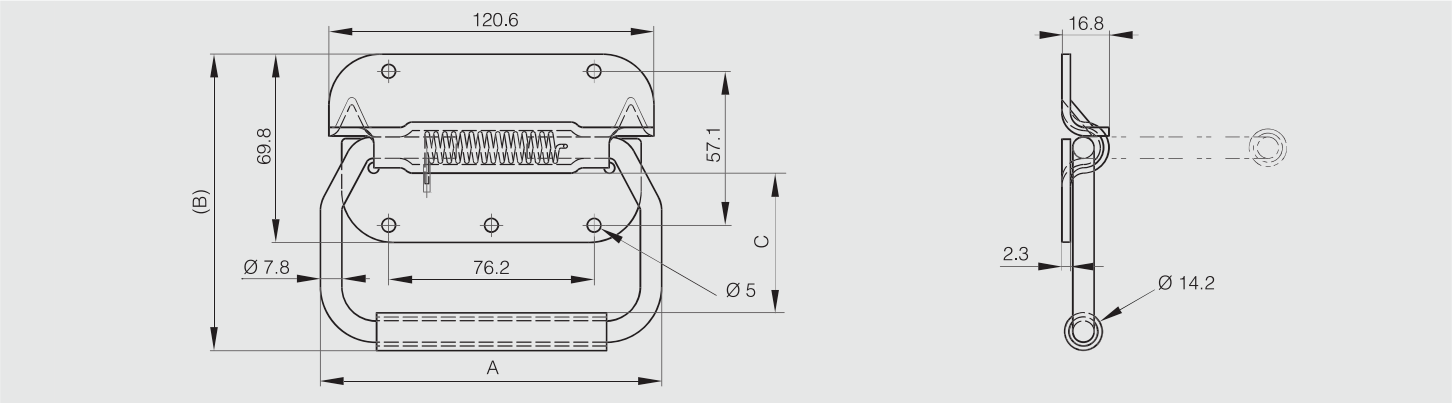

Spring loaded handles 130 mm - load 68 kg

STEEL

Maximum load: 68 kg.
With 90° stop.
A special aluminium sleeve located between the rubber grip and the bail assures the grip will not ride up on the bail during lifting. Adds comfort and durability.
Fungus resistant neoprene.
Meets military specifications MIL.T.945, MIL.C.4150.

Part number	Material	Finish	A	B	C	D	E	Weight (g)
19-7-3729	steel	zinc plated	130	101.6	50.8	14.2	2.3	275
19-7-3730	steel	zinc plated	130	104.1	50.8	19	2.3	285

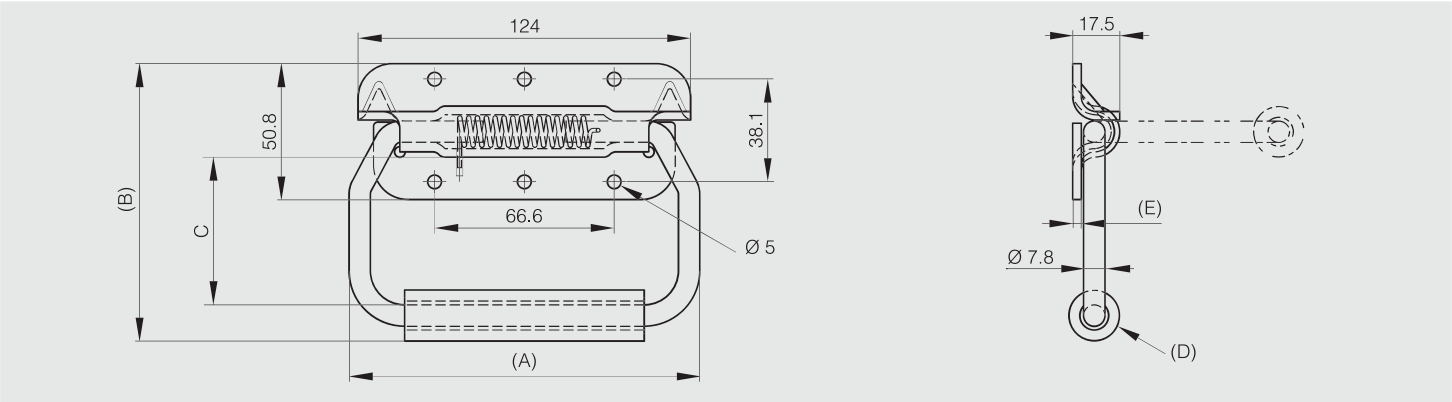

Recessed spring loaded drop handles 155.5 mm - load 57 kg

STEEL

Maximum load: 57 kg.
With 90° stop.
Cut-out dimension: 78.7 x 132.

Part number	Material	Finish	A	B	C	D	Weight (g)
19-7-3751	steel	zinc plated	152.4	101.6	42.9	19	385
19-7-3749	steel	zinc plated	155.5	101.6	46	13.5	385

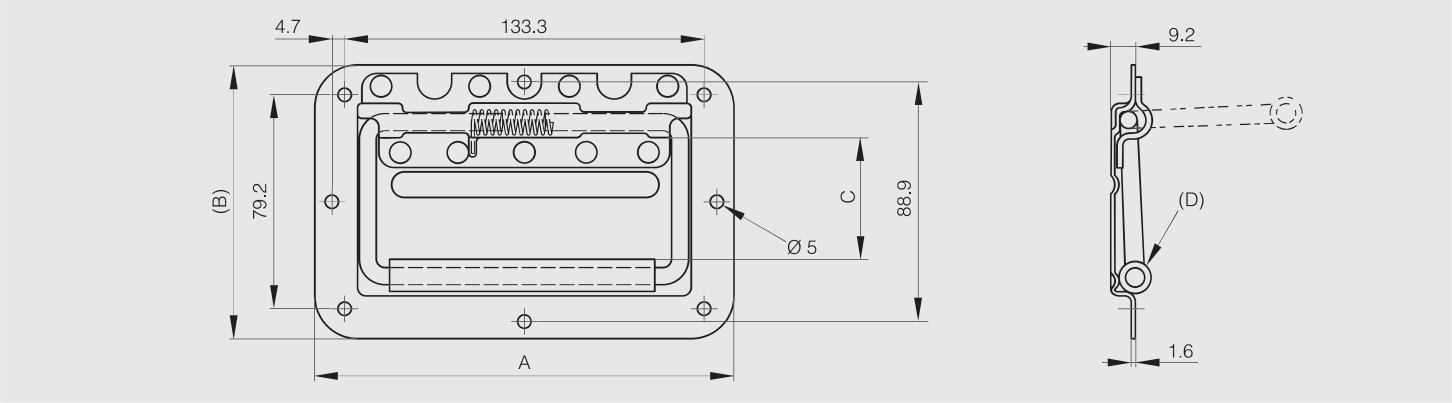

Recessed spring loaded drop handles 177.8 mm - load 68 kg

STEEL

Maximum load: 68 kg.
With 90° stop.
Cut-out dimension: 99 x 146.

Part number	Material	Finish	A	B	C	Weight (g)
19-7-3756	steel	zinc plated	177.8	127	62	567

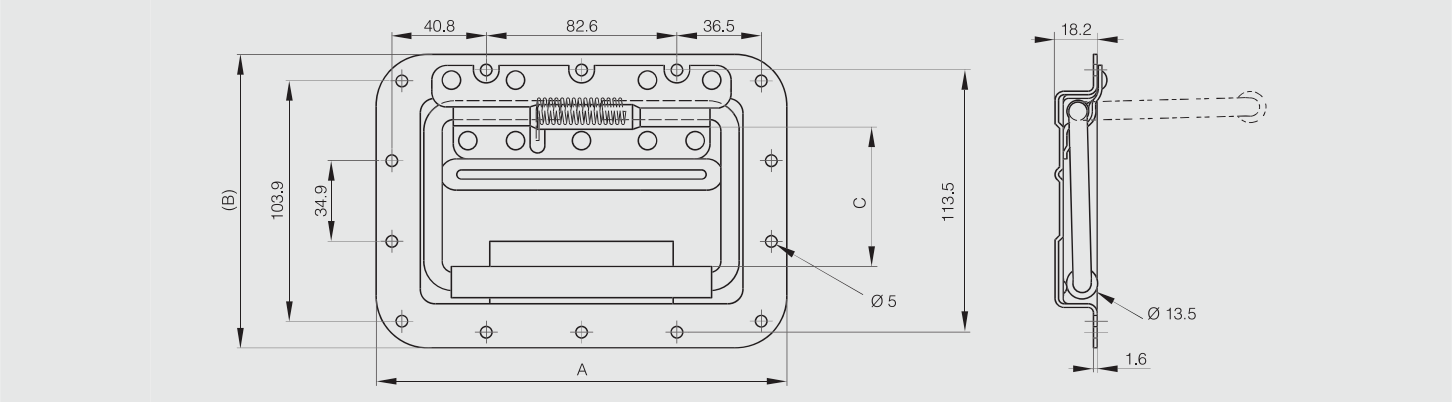

Flush handles 105 x 63.5 mm

ALU RoHS

This handle has 2 detents at 0° and 90°.
Maximum load: 100 kg/pair.
Handle is chrome plated.
Delivered unassembled.
Assembled version: upon request.

Part number	Material	Finish	A	B	C	Weight (g)
19-7-3605	aluminium	raw	105	63.5	17.5	123

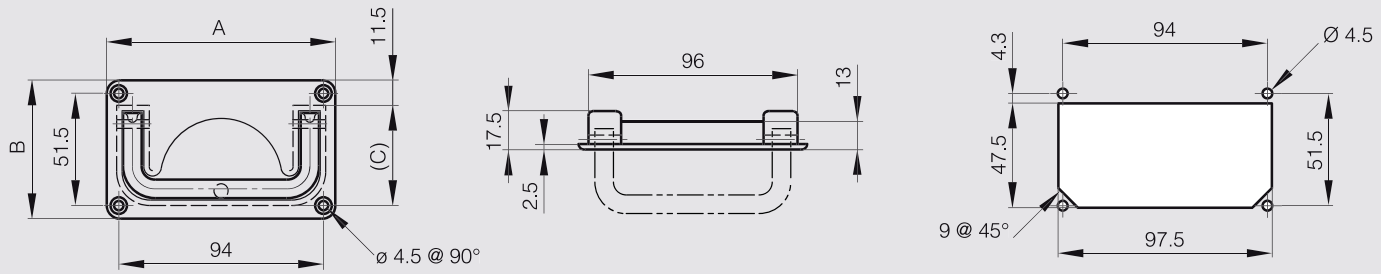

Flush handle 120 x 91 mm

ALU RoHS

This handle has 2 detents at 0° and 90°.
Maximum load: 100 kg/pair.
Delivered unassembled.
Assembled version: upon request.

Part number	Material	Finish	A	B	C	Weight (g)
19-7-3338	aluminium	raw	120	91	71.5	145

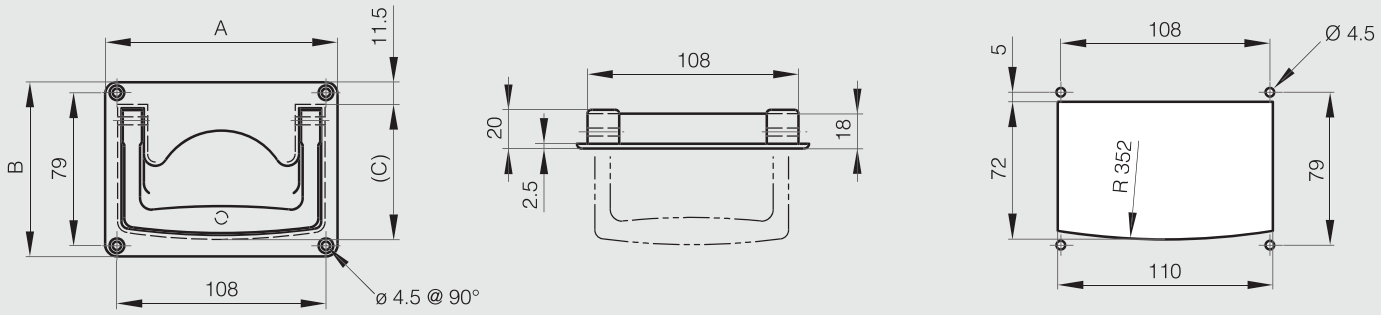

Flush handle 150 x 105 mm

STEEL RoHS

This handle has 2 detents at 0° and 90°.
Maximum load: 100 kg/pair.
Delivered unassembled.
Cut-out dimension: 83 x 127.

Part number	Material	Finish	A	B	Weight (g)
19-7-3606	steel	zinc plated	150	105	450

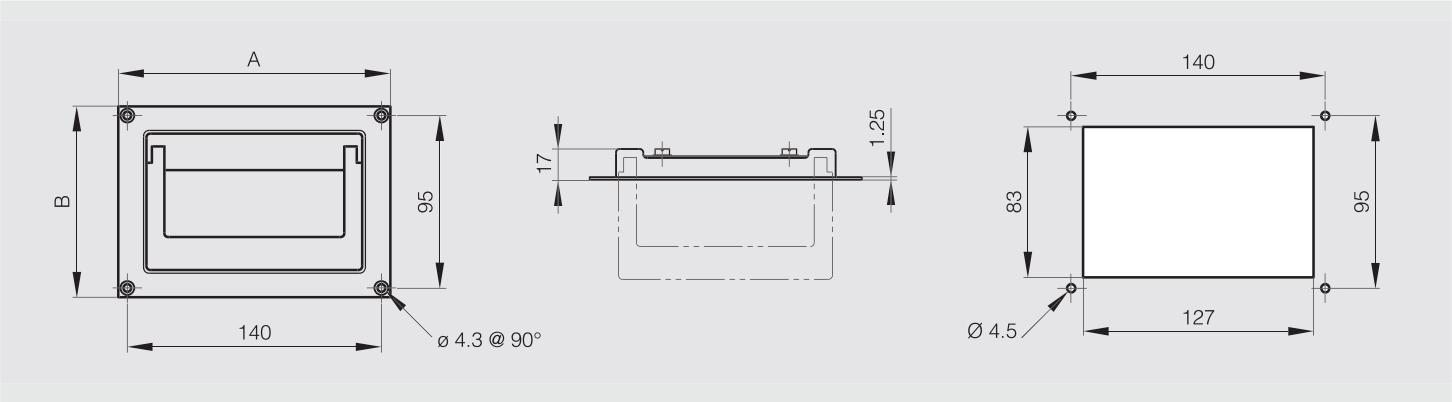

Flush handle 194 x 76 mm

ZAMAK RoHS

This handle has 2 detents at 0° and 90°.
Maximum load: 100 kg/pair.

Part number	Material	Finish	A	B	C	Weight (g)
19-7-3643	zinc die-cast	silver varnish / black	194	76	20.5	310

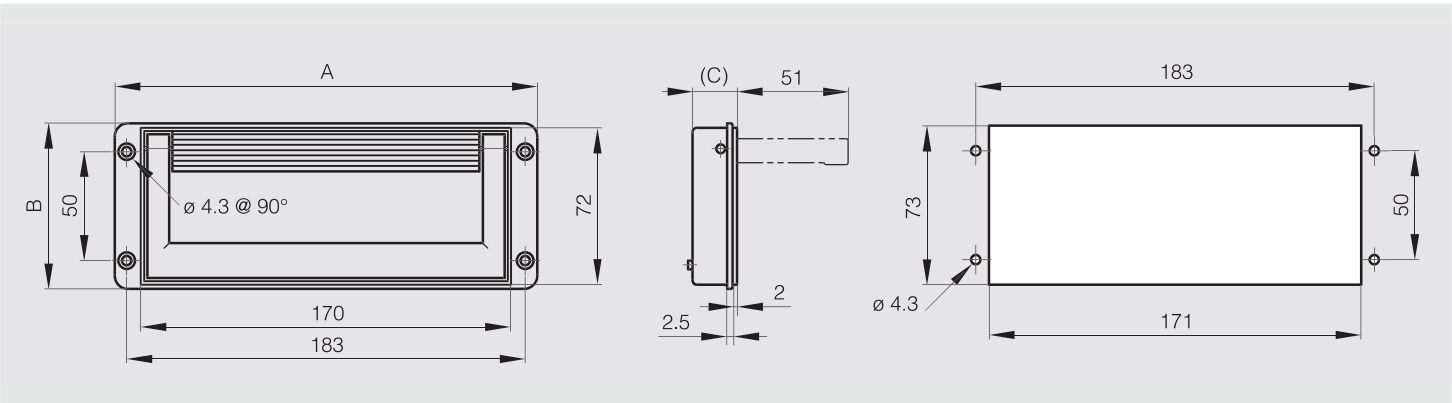

Retractable flush handles in stainless steel

STAINLESS STEEL RoHS

Part number	Material	Finish	A	B	C	D	E	F	Weight (g)
19-7-3813	304 stainless steel	satin	76	36	24	60	18	90	46
19-7-3814	304 stainless steel	satin	94	42	24	72	18	110	55

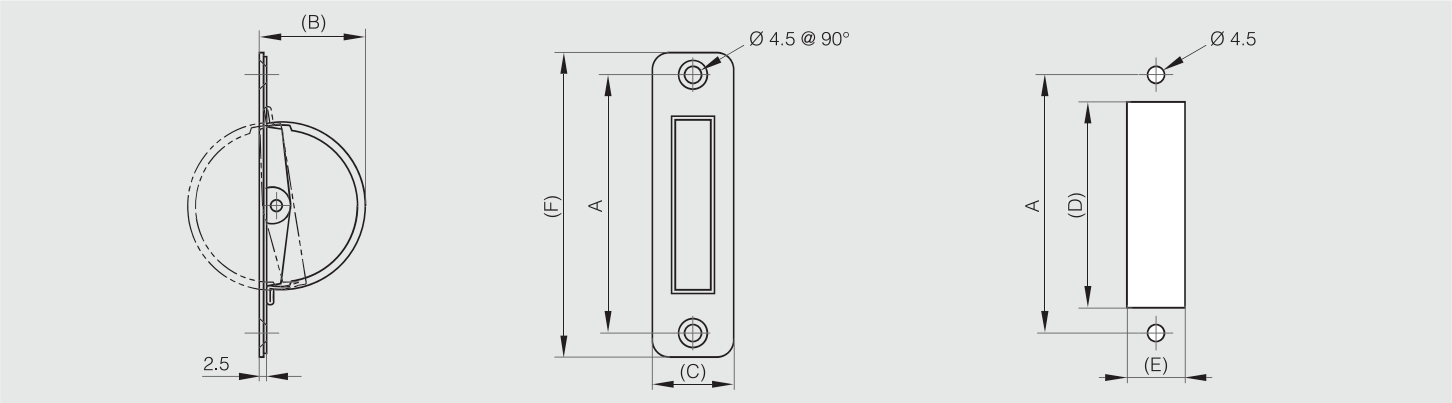

Screw-on flush handle 101 x 52 mm

POLYMER RoHS

Part number	Material	Finish	A	B	C	Weight (g)
19-7-3642	ABS	grey	101	52	15	20

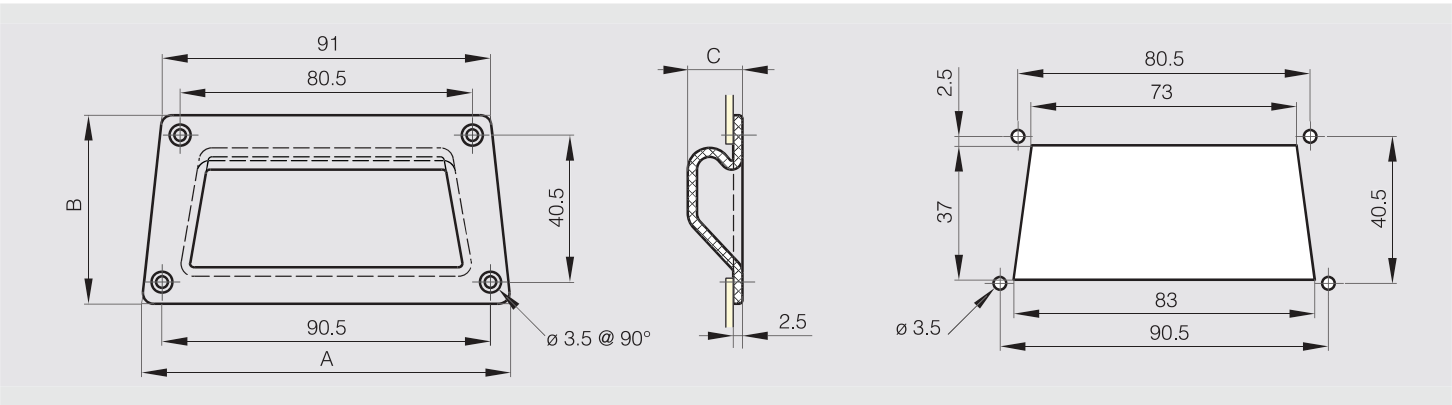

Screw-on flush handle 131 x 79 mm

POLYMER RoHS

Part number	Material	Finish	A	B	C	Weight (g)
19-7-3667	ABS	black	131	79	58	45

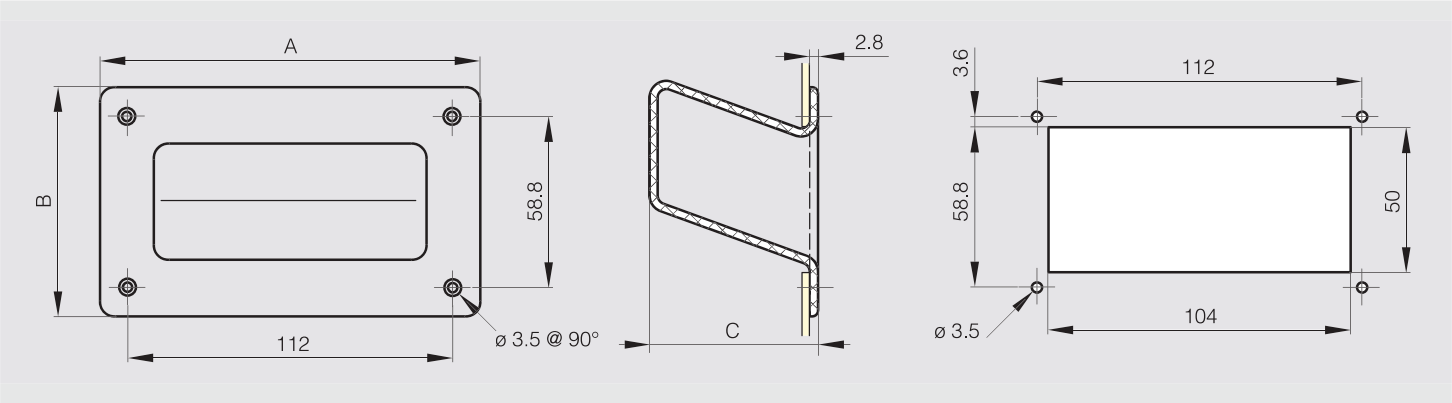

Screw-on recessed grab handle

POLYMER RoHS

Part number	Material	Finish	A	B	C	Weight (g)
19-1-3815	polyamide	black	133	60	22	47

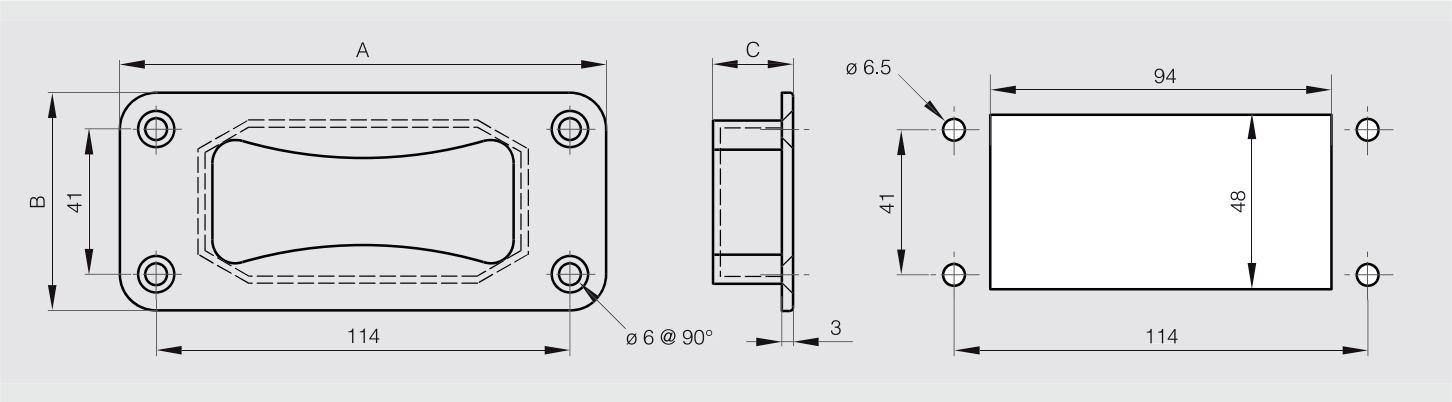

Bolt-on flush handle 120 x 60 mm

STAINLESS STEEL RoHS

Part number	Material	Finish	A	B	C	Weight (g)
19-7-3831	304 stainless steel	satin	120	60	15	54

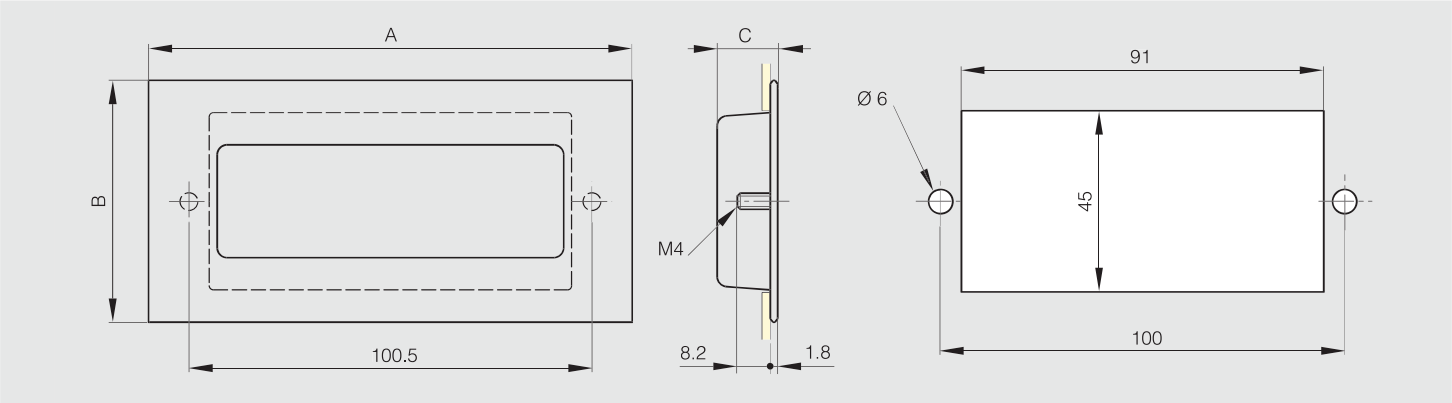

Bolt-on flush handle 120 x 62 mm

STAINLESS STEEL

Bolt in copper plated steel.
Produced mainly in stainless steel, for a complete description of the materials contact us.

Part number	Material	Finish	A	B	C	Weight (g)
19-7-3832	304 stainless steel	satin	120	62	16	60

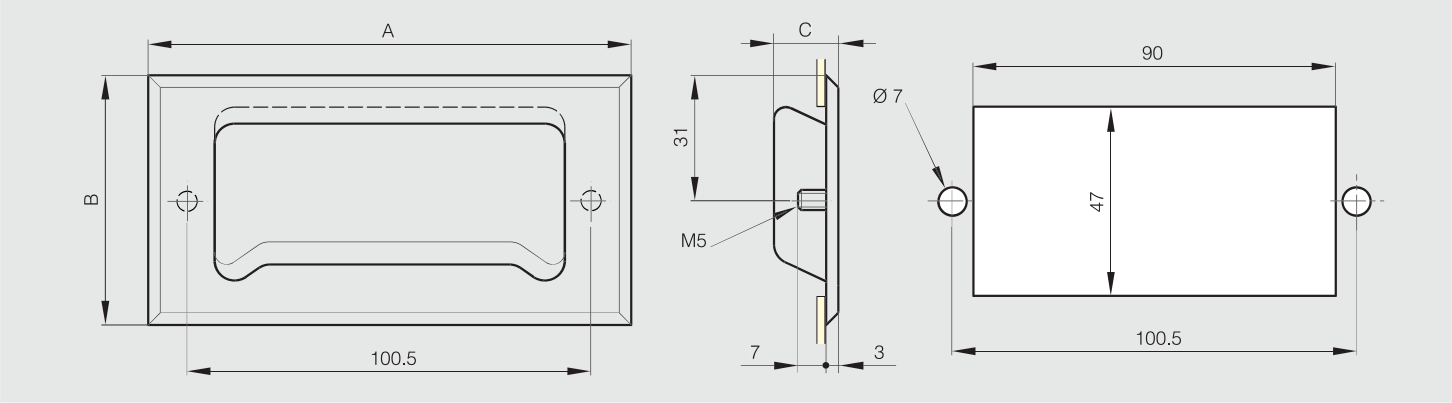

Bolt-on flush handle 138 x 88 mm

Stud in 304 stainless steel.

Part number	Material	Finish	A	B	C	Weight (g)
19-7-3845	304 stainless steel	satin	138	88	26	170

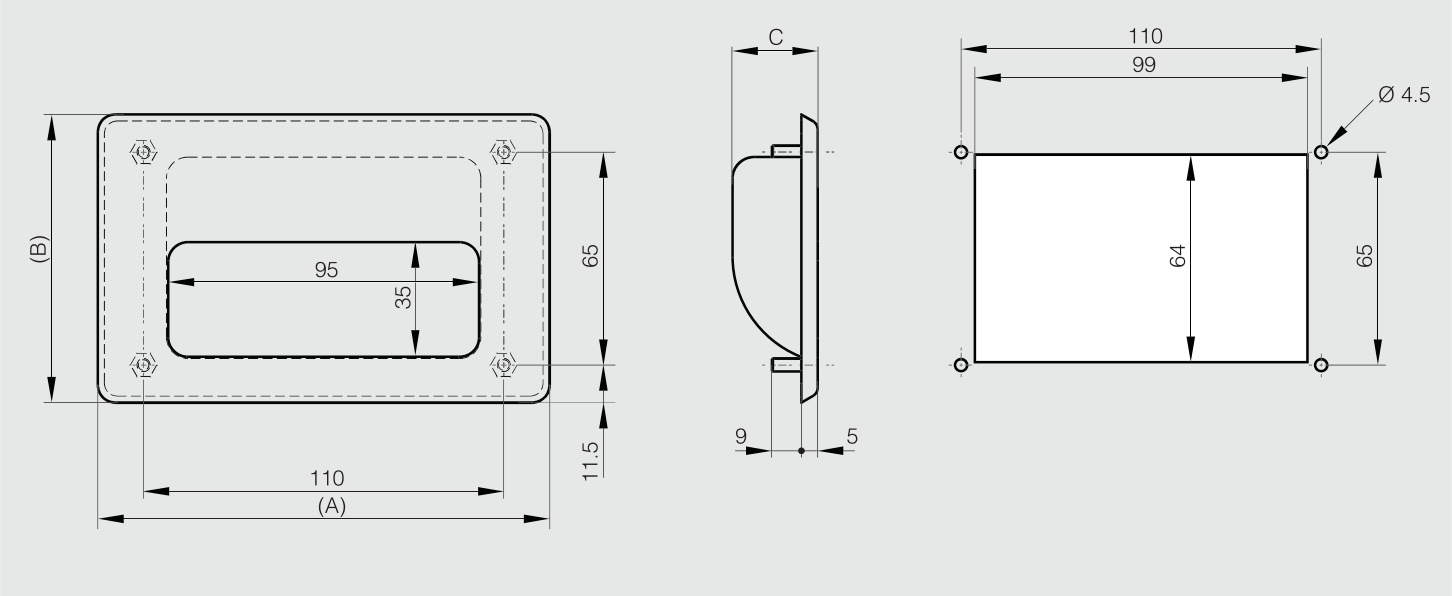

Recessed handle in elastomer

Snap-in in the cut-out.

POLYMER RoHS

Part number	Material	Finish	A	B	C	Weight (g)
19-7-3838	elastomer	black	120	58	43	95

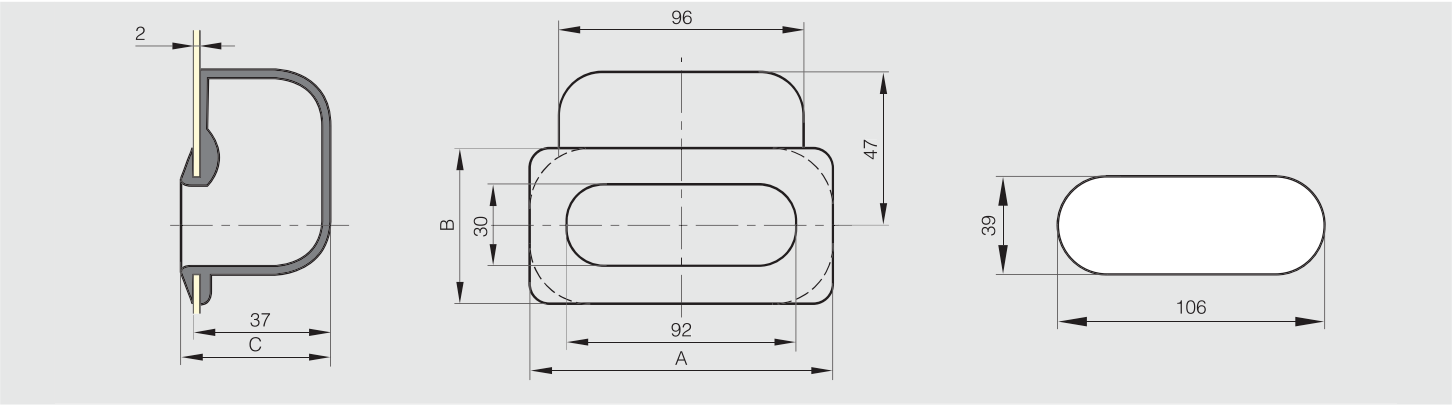

Snap-in flush handle 90 x 40 mm

Door thickness: 0.75 to 1.5 mm.

POLYMER RoHS

Part number	Material	Finish	A	B	C	Weight (g)
19-1-3687	ABS	black	90	40	16	11

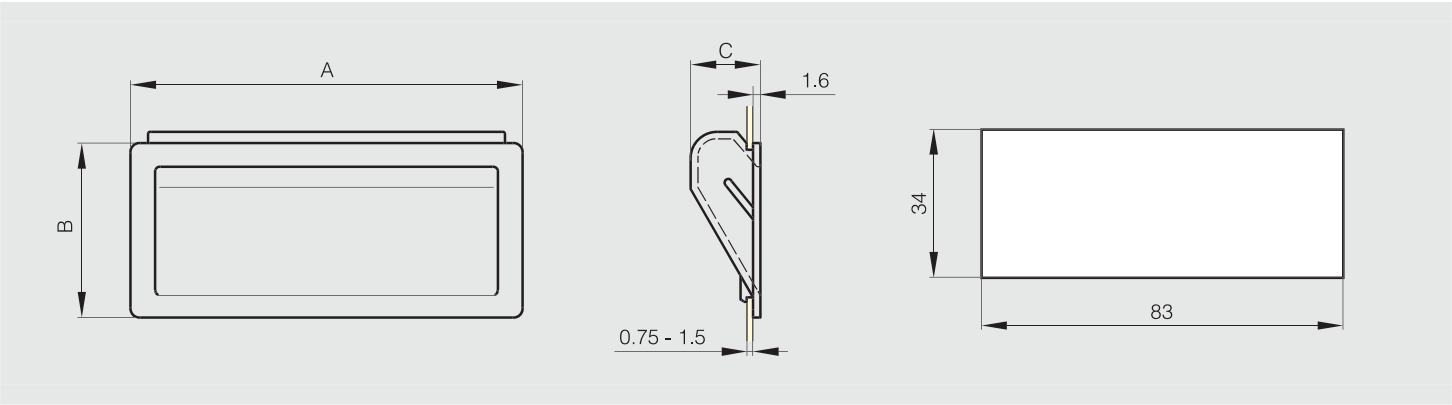

Snap-in flush handles 137.4 x 37.4 mm or 140 x 36 mm

POLYMER RoHS

Part number 19-1-3830: cut-out 132 x 30.7 for material thickness from 0.8 to 1.5 mm.
Part number 19-7-3826: cut-out 132 x 30.7 for material thickness from 0.8 to 1.2 mm.
Part number 19-7-3826: cut-out 132 x 31.7 for material thickness from 1.2 to 1.5 mm.

Part number	Material	Finish	A	B	C	E	Weight (g)
19-1-3830	ABS	black	137.4	37.4	18.6	1.6	30
19-7-3826	polyamide	black	140	36	30	2.0	32

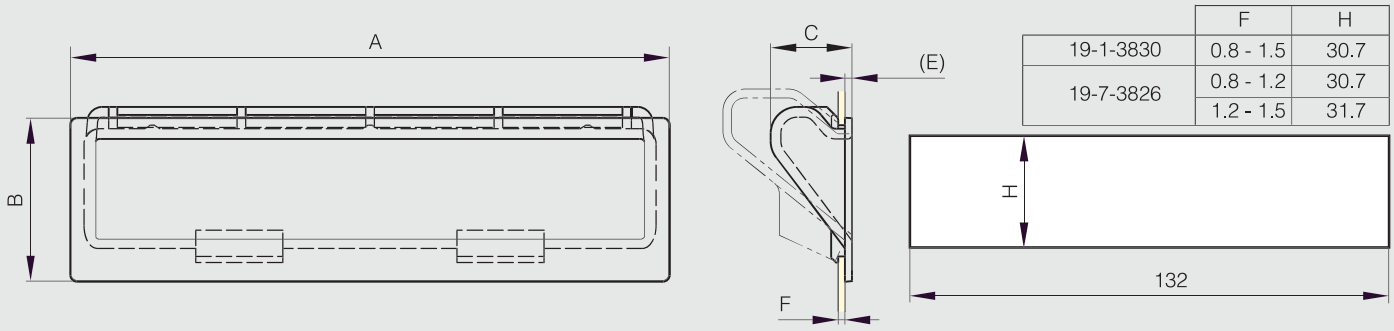

	F	H
19-1-3830	0.8 - 1.5	30.7
19-7-3826	0.8 - 1.2	30.7
	1.2 - 1.5	31.7

Flush handle with fixing clips 110 x 56.3 mm

POLYMER RoHS

Door thickness: 0.75 to 1.5 mm.
Supplied with fixing clips.

Part number	Material	Finish	A	B	C	Weight (g)
19-7-3688	ABS	black	110	56.3	18	32

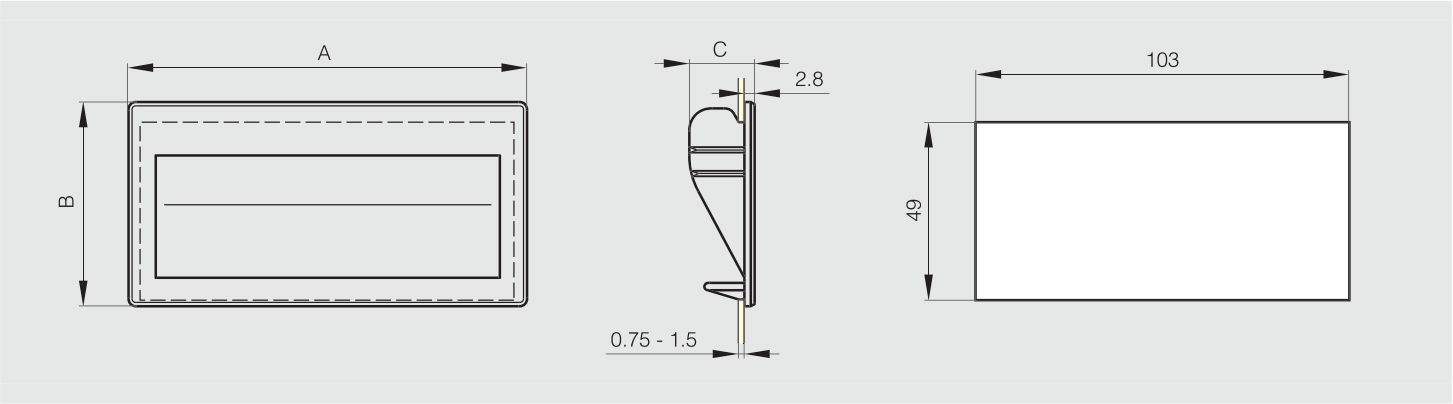

Flush handle with fixing clips 187 x 79 mm

POLYMER RoHS

Door thickness: 1.5 to 2 mm.
Supplied with fixing clips.

Part number	Material	Finish	A	B	C	Weight (g)
19-7-3689	ABS	black	187	79	22	85

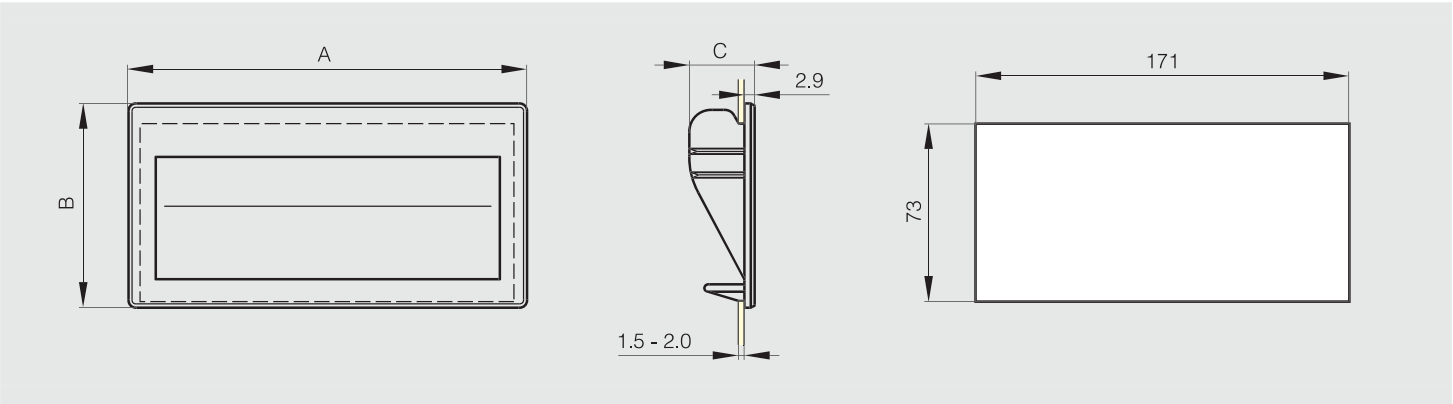

Notes

ACCESSORIES

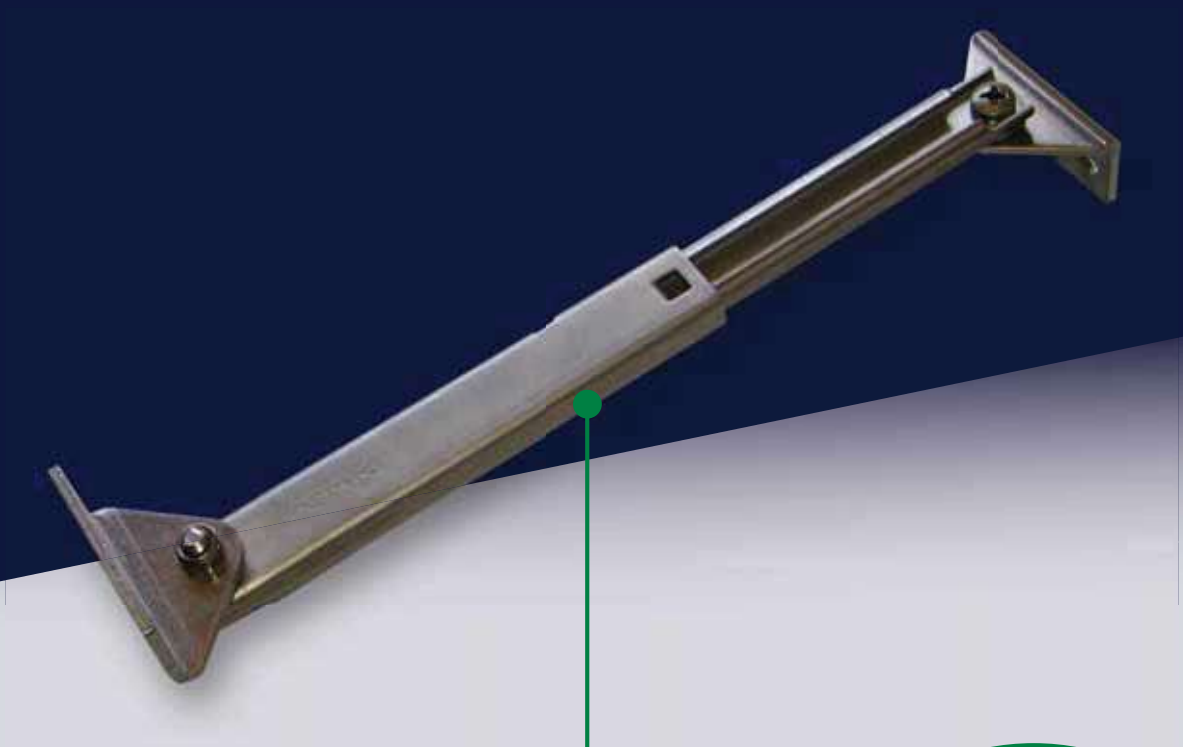

SUPPORT STAYS

Support stays with automatic release - small size 360

Support stay with automatic release - 239 mm long 360

Support stays with automatic release in stainless steel 361

Support stay with automatic release - 495 mm long 361

Support stays with manual release 362

Bracket 362

Multi-angle lid stay with lock 363

Support stay 364

LID STAYS

Heavy duty spring loaded stay 365

Stay with safety stop 366

Black zinc plated stays A 367

Black zinc plated stays B 367

Stays without bracket 368

Zinc plated stays 368

NEW
Folding bracket 369

DOOR HOLDER

Door holders 370

RECESSED HOOKS

NEW
Hook 371

NEW
Double hook 371

NEW		Rotating swing hook	372
NEW		Swing hook	372

TELESCOPIC SLIDES

		3/4 extension ball-bearing slide (2 pieces), front disconnect	373
		Full extension ball-bearing slide (3 pieces), front disconnect and positive lock	374
		Full extension ball-bearing slide (3 pieces), front disconnect and positive stop	375
		Heavy duty, full extension ball-bearing slide (3 pieces), front disconnect and positive stop	376
		Full extension ball-bearing slide (3 pieces), soft-closing	377

Support stays with automatic release

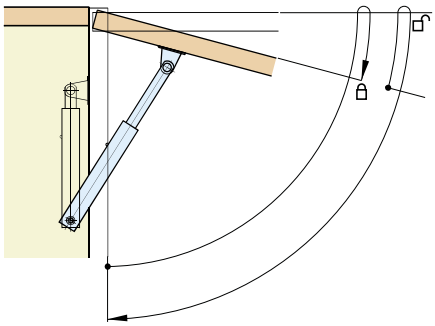

Support stays with automatic release - small size

STAINLESS STEEL RoHS

Load capacity: 6 kg.
Produced mainly in stainless steel, for a complete description of the materials contact us.

Part number	Material	Finish	A	B	C	D	K	Weight (g)
24-7-3571	304 stainless steel	raw	88	140	15.4	8.8	52	40
24-7-3577	304 stainless steel	raw	67	100	15.4	8.8	32	10

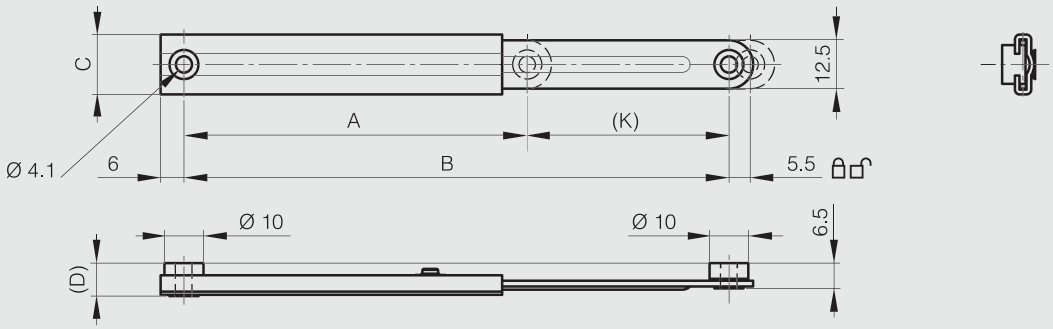

Support stay with automatic release - 239 mm long

STEEL RoHS

A = closed dimension.
B = extended dimension.

Part number	Material	Finish	A	B	Weight (g)
24-7-3542	steel	zinc plated	159	239	112

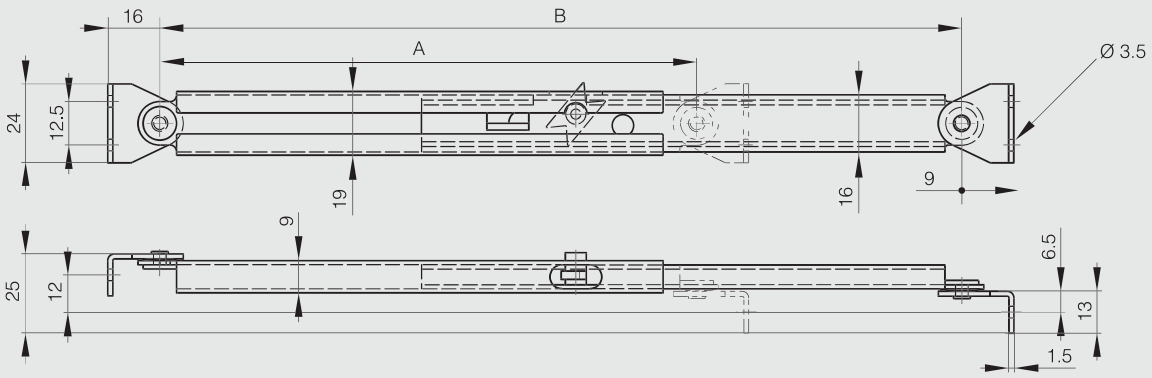

Support stays with automatic release in stainless steel

STAINLESS STEEL

Load capacity: 15 kg.

Part number	Material	Finish	A	B	Weight (g)
24-7-3552	304 stainless steel	satin	133	195	125
24-7-3553	304 stainless steel	satin	170	270	150

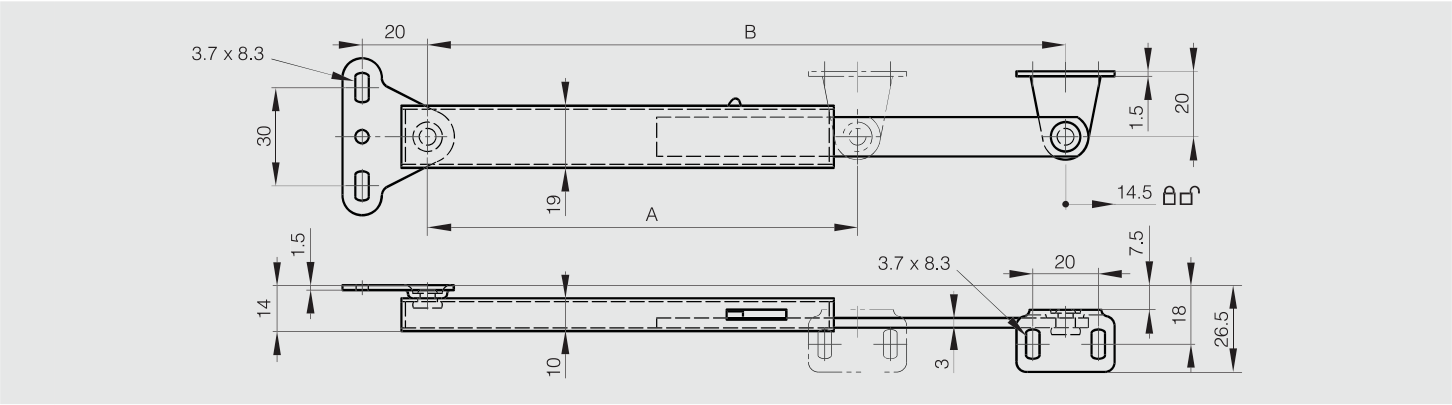

Support stay with automatic release - 495 mm long

STEEL RoHS

A = closed dimension.
B = extended dimension.

Part number	Material	Finish	A	B	Weight (g)
24-7-3543	steel	zinc plated	290	495	300

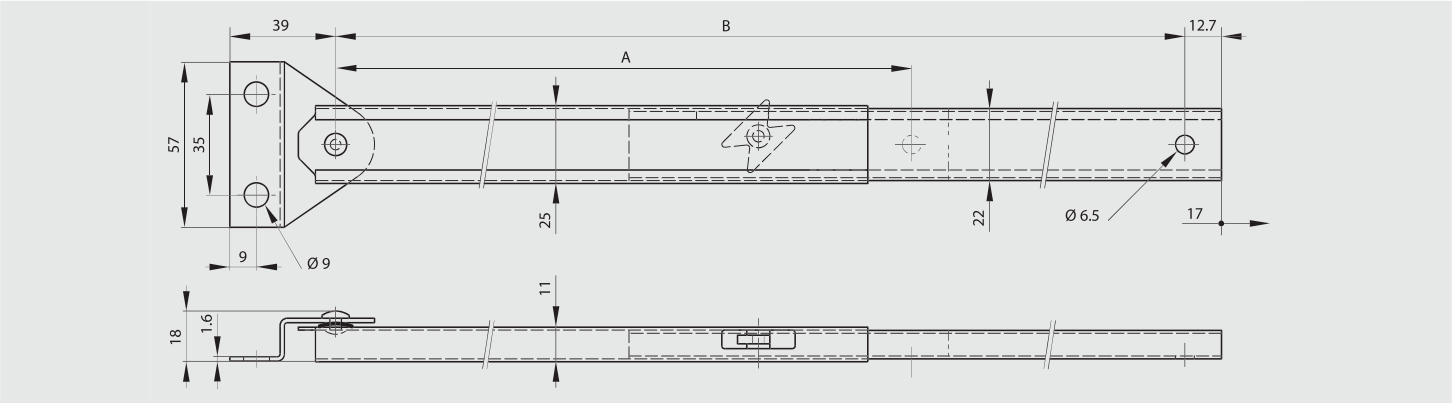

Support stays with manual release

STAINLESS STEEL RoHS

A = closed dimension.
B = extended dimension.
Load capacity: 50 kg.
Push button release.

Part number	Material	Finish	A	B	Weight (g)
24-1-3558	304 stainless steel	raw	125	175	101
24-1-3559	304 stainless steel	raw	150	225	125
24-1-3560	304 stainless steel	raw	175	275	145

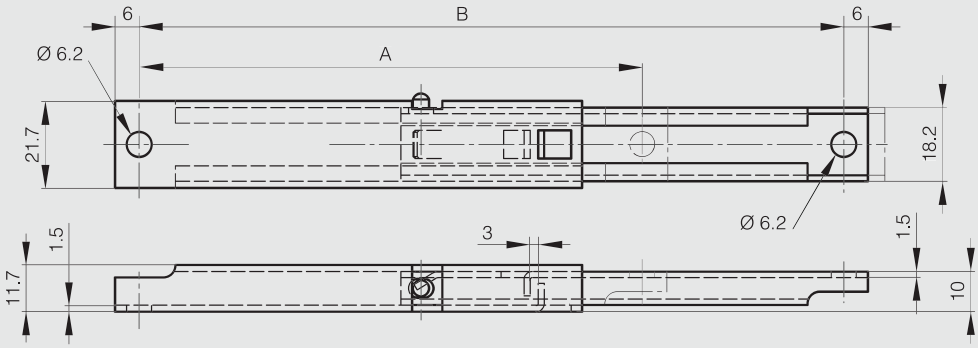

Bracket

STAINLESS STEEL

Complete with M6 screw, M6 nut and 3 mm thick washer (included).
For part numbers 24-1-3558, 24-1-3559 and 24-1-3560.

Part number	Material	Finish	A	B	Weight (g)
99-1-3558	stainless steel	raw	50	26	60

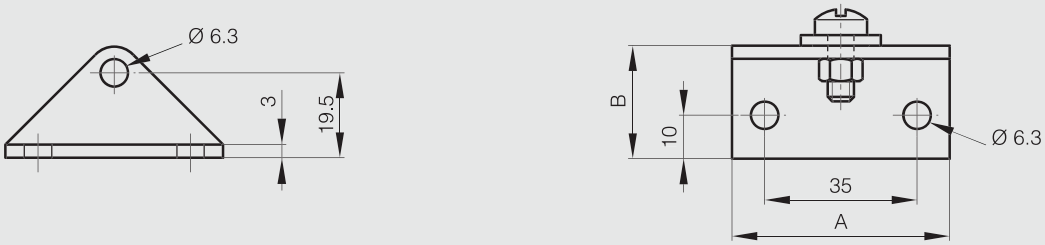

Multi-angle lid stay with lock

STAINLESS STEEL

Locks lid in multiple positions by manually sliding lock lever.
Slide back lever to lock / unlock.
Ideal for vibration or shock applications.
Can be installed individually or in pairs.
Non-handed: can be installed on left or right side.
Compression load: max. 290 N.
Produced mainly in stainless steel, for a complete description of the materials contact us.

Part number	Material	Finish	A	B	Weight (g)
24-7-3580	304 stainless steel	satin	224	350	325

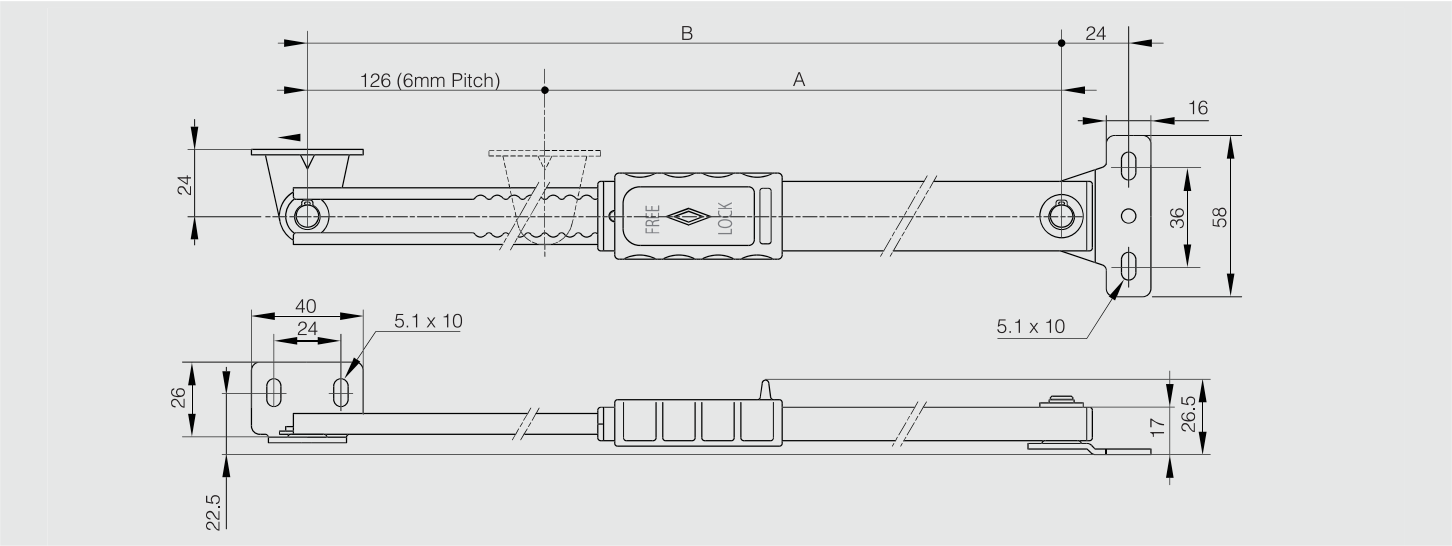

Support stay

For limiting opening angle of panels..
Produced mainly in stainless steel, for a complete description of the materials contact us.

Part number	Material	Finish	A	B	Weight (g)
24-7-3546	304 stainless steel	satin	180	210	90
24-7-3547	304 stainless steel	satin	210	240	95
24-7-3548	304 stainless steel	satin	240	270	107

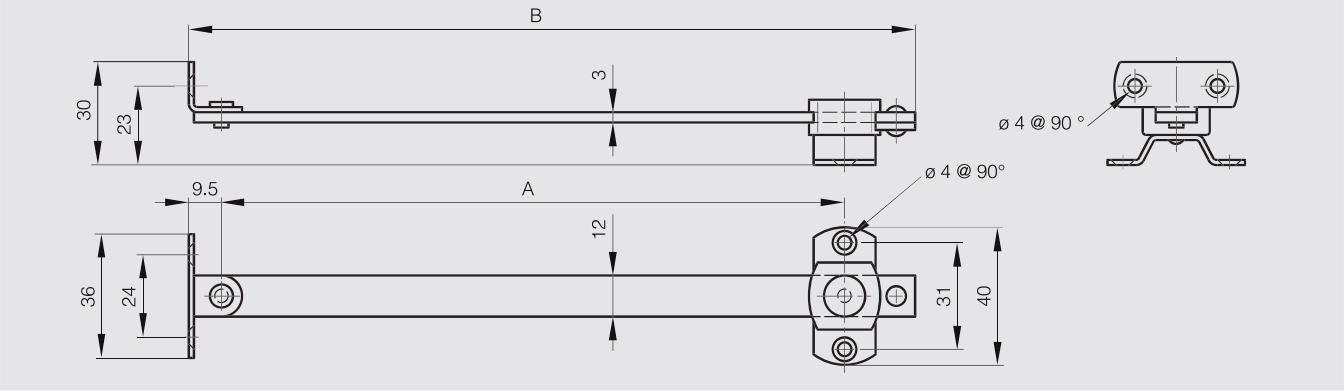

Heavy duty spring loaded stay

STAINLESS STEEL RoHS

- Spring mechanism assists in lifting door and holds in open position (10° to 80°).
- Can be installed individually or in pairs.
- Non-handed: can be installed on left or right side.
- Torque calculation:

Torque (N.m) = H(m) x 1/2 x W (kg) x 9.8 with:
H = door height (m)
W = door weight (kg)
Produced mainly in stainless steel, for a complete description of the materials contact us.

Part number	Material	Finish	A	Torque	Weight (g)
24-7-3579	430 stainless steel	raw	94.2	8.8 - 11.8 N.m	195

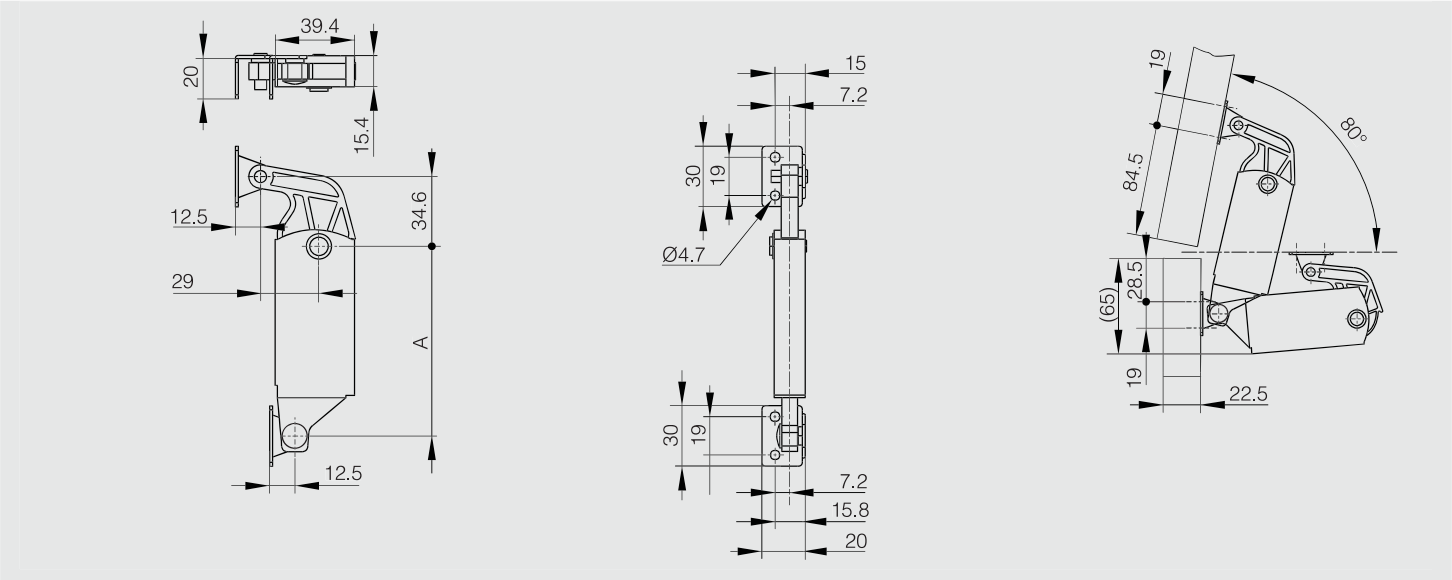

Easy Operation with power assist

Free stop

Compact

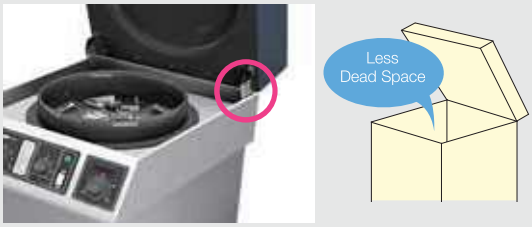

Selection graph

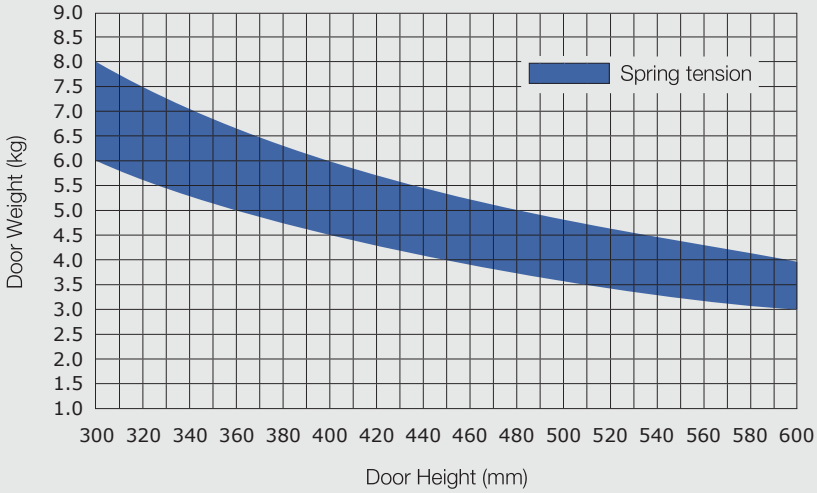

Lid stays

Stay with safety stop

STAINLESS STEEL | STEEL | RoHS

Part number	Material	Finish	A	B	Weight (g)
24-1-3578	steel	zinc plated	137.5	152	148
24-1-3588	steel	zinc plated	137.5	152	148
24-1-9000	304 stainless steel	raw	139	152	148
24-1-9001	304 stainless steel	raw	139	152	148

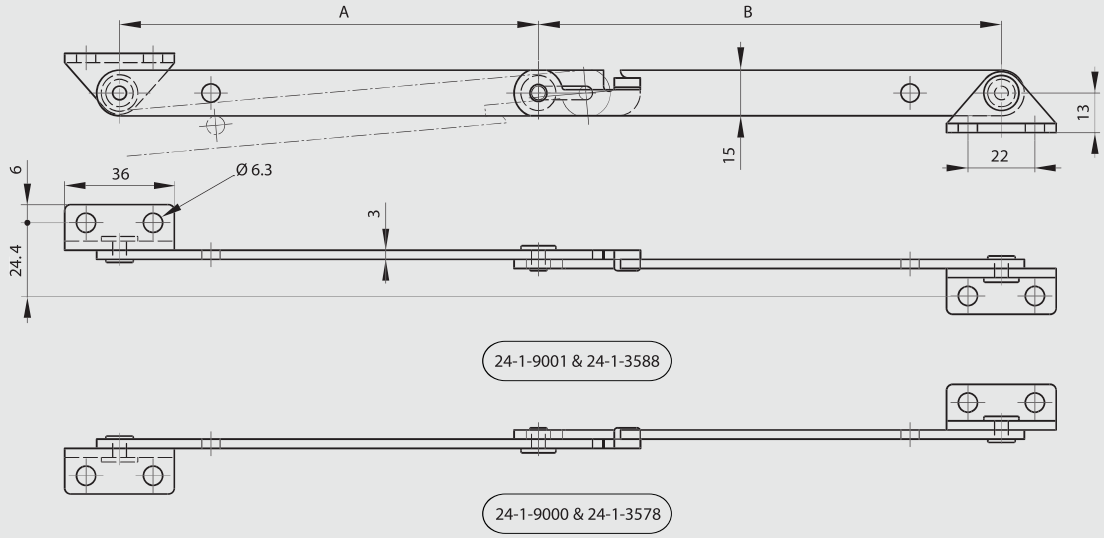

Black zinc plated stays A

STEEL RoHS

Part number	Material	Finish	A	Weight (g)
24-1-3311	steel	black zinc plated	80	34
24-1-3312	steel	black zinc plated	80	34

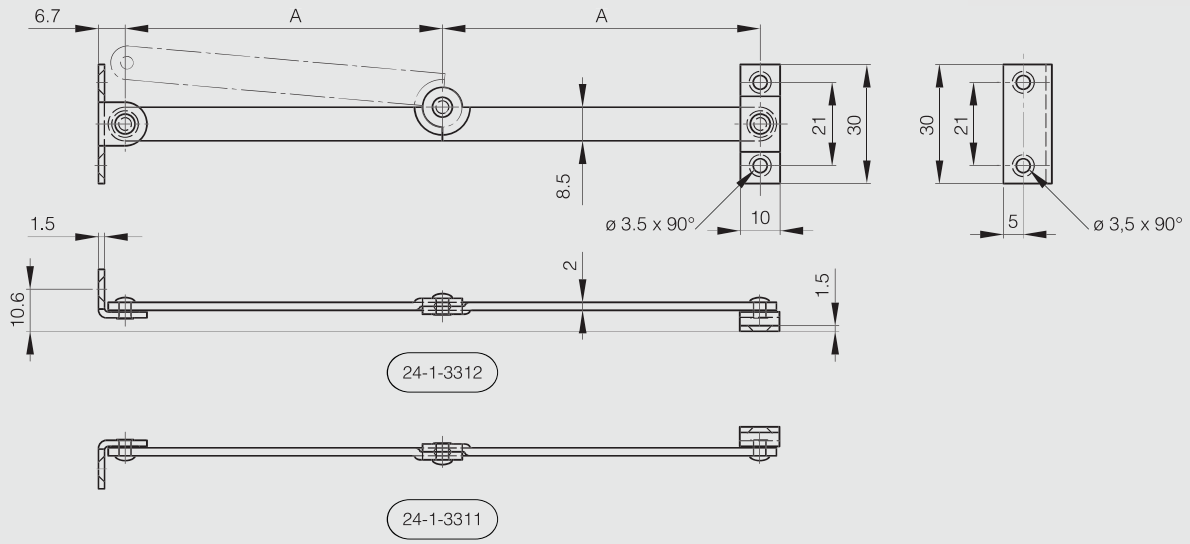

Black zinc plated stays B

STEEL RoHS

Part number	Material	Finish	A	Weight (g)
24-1-3323	steel	black zinc plated	80	33
24-1-3324	steel	black zinc plated	80	33

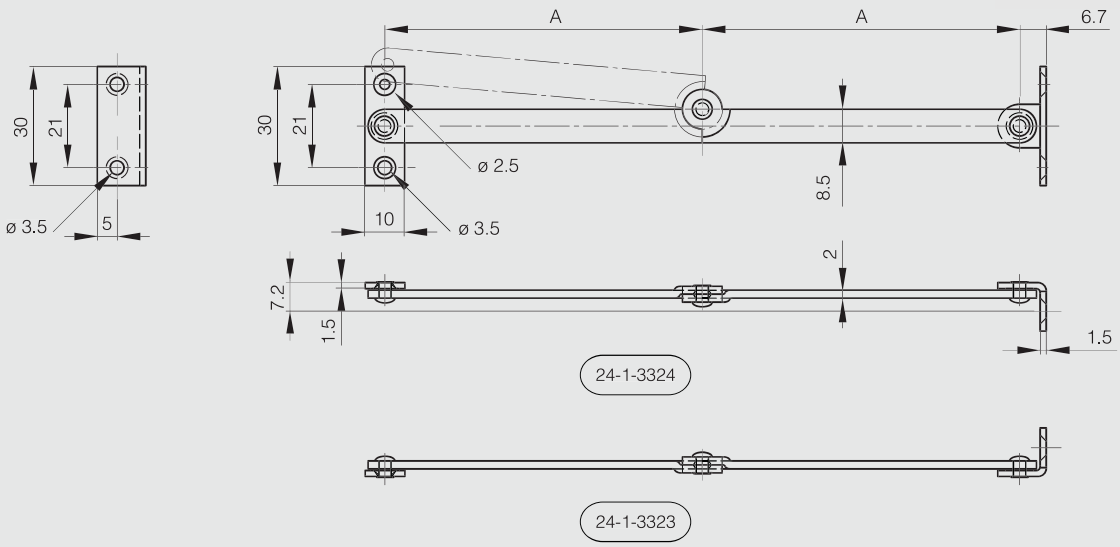

Stays without bracket

Produced mainly in stainless steel, for a complete description of the materials contact us.

STAINLESS STEEL RoHS

Part number	Material	Finish	A	Weight (g)
24-1-0247	304 stainless steel	polished	102	35
24-1-0248	304 stainless steel	polished	102	35

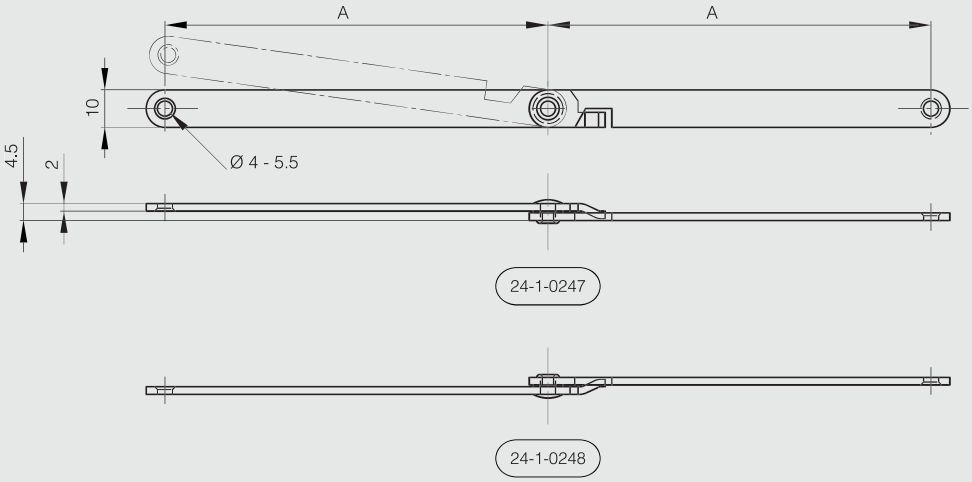

Zinc plated stays

STEEL RoHS

Part number	Material	Finish	A	Weight (g)
24-7-3525	steel	zinc plated	125	116
24-7-3526	steel	zinc plated	125	116
24-7-3527	steel	zinc plated	150	133
24-7-3528	steel	zinc plated	150	133
24-7-3529	steel	zinc plated	175	152
24-7-3530	steel	zinc plated	175	152
24-7-3531	steel	zinc plated	200	167
24-7-3532	steel	zinc plated	200	167

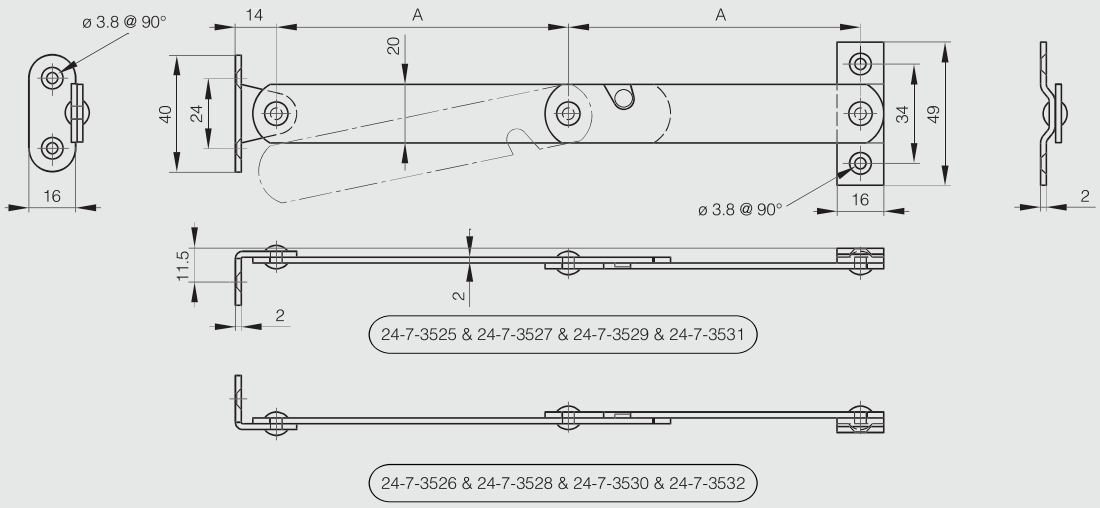

Folding bracket

NEW

STAINLESS STEEL RoHS

Automatically locks when flap is in opened position.
Press lever to release the lock.
Bracket with hinge function in one unit.
Load capacity:
24-7-2587 =150kg/unit
24-7-3595 =175kg/unit

	Part number	Material	Finish	A	B	C	D	E	F	G	H	Weight (g)
NEW	**24-7-3595**	304 stainless steel	polished	201	116	29	155	-	21	80	-	332
	24-7-3587	304 stainless steel	polished	307	165	29	98	156	38	45	67	515

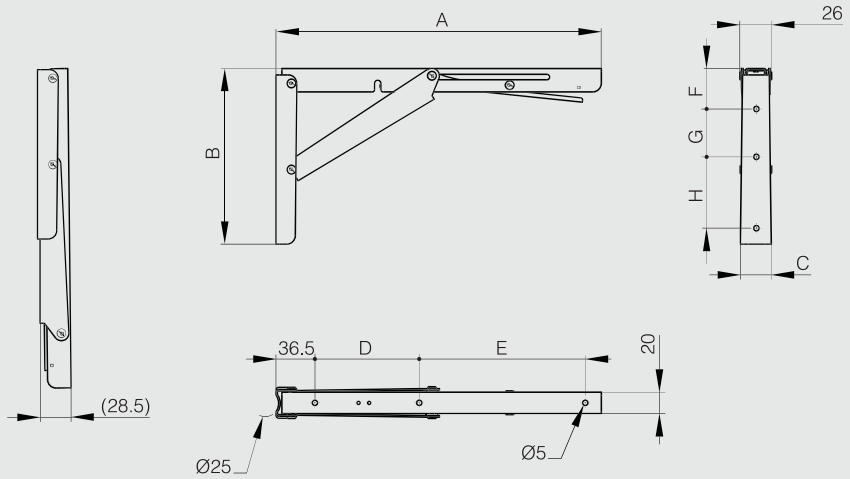

Door holder

Door holders

STAINLESS STEEL

Automatically locks door when fully opened. Slide the locking lever to release the lock.
Tensile force: Max 1500 N.
Compression load: Max 600 N.
Handed: specific left and right hand mounting.

Part number	Material	Finish	A	Weight (g)
22-7-3547	304 stainless steel	polished	200	630
22-7-3548	304 stainless steel	polished	200	630

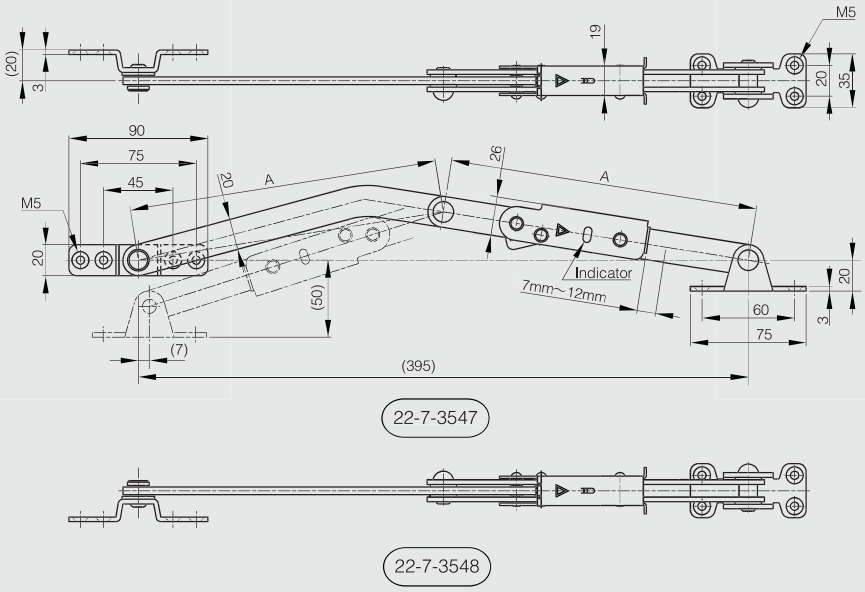

Recessed hooks

Hook

NEW

STAINLESS STEEL RoHS

Load Capacity
22-7-3561 = 200 N
22-7-3560 = 150 N

Parts included : stainless steel raised countersunk head wood screw 4.1 x 16

	Part number	Material	Finish	A	B	C	D	E	F	G	Weight (g)
NEW	22-7-3561	304 stainless steel	satin	55	15	4	33	23	8	19	34
NEW	22-7-3560	304 stainless steel	satin	70	18	4	43	30	10	23	53

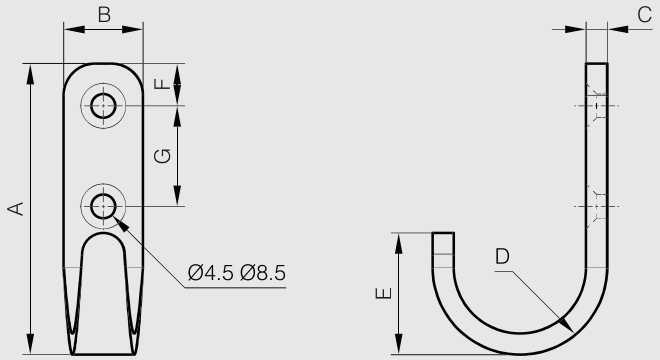

Double hook

NEW

STAINLESS STEEL RoHS

Load capacity: 130 N

Parts included : stainless steel head tapping screw 3 x 16.

	Part number	Material	Finish	A	B	C	Weight (g)
NEW	22-7-3557	304 stainless steel	satin	100	13	2	16

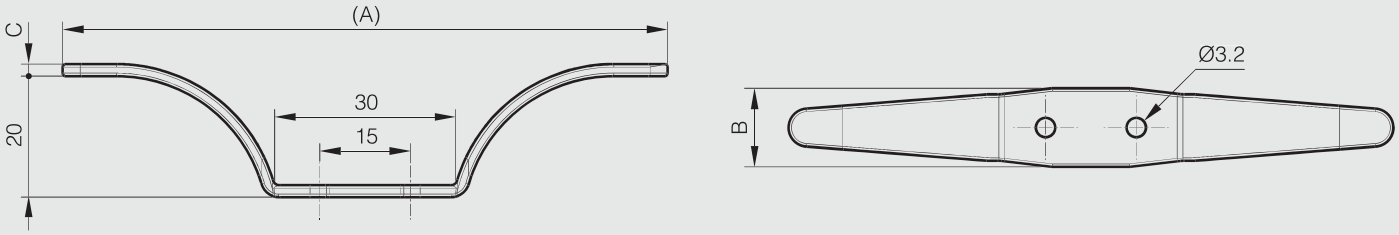

Rotating swing hook

NEW

STAINLESS STEEL RoHS

Easy to use hook that swings 180° vertically and rotates 360°.
Can be installed on either ceilings or walls.
Load capacity: 87 N

Parts included : raised countersunk head tapping screw 4 x 16.

	Part number	Material	Finish	A	B	C	Weight (g)
NEW	22-7-3558	304 stainless steel	polished	48	18	2.5	45

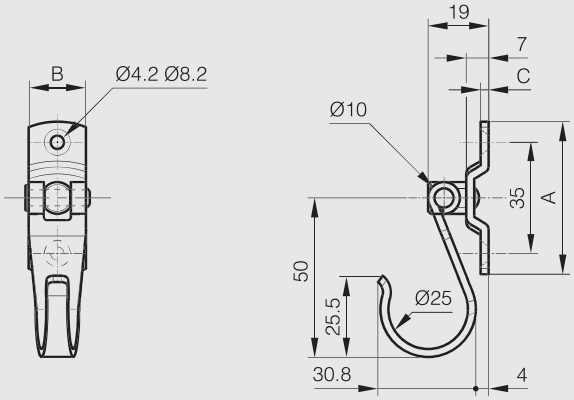

Swing hook

NEW

STAINLESS STEEL RoHS

Swivels 180°
Hook with friction
Load capacity: 118 N

Parts included : countersunk head wood screws 3.5 x 20

	Part number	Material	Finish	A	B	C	Weight (g)
NEW	22-7-3559	304 stainless steel	polished	20	35	36	17

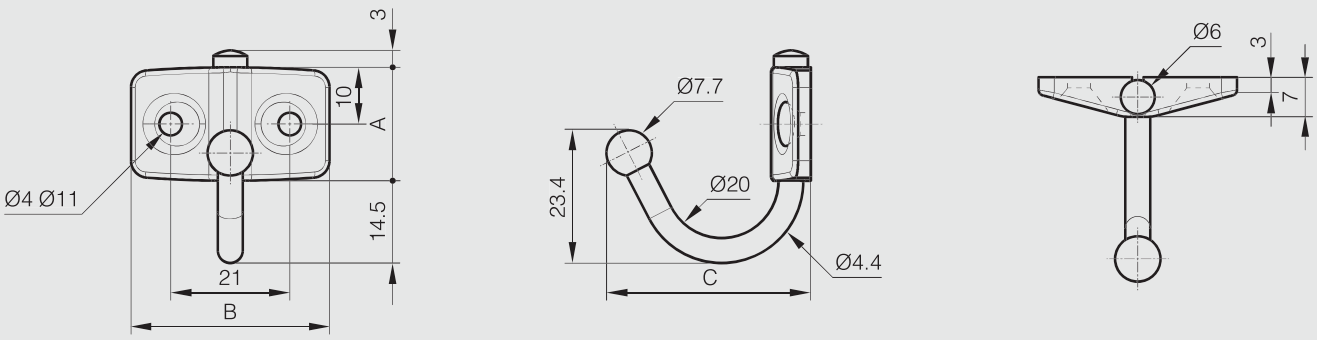

3/4 extension ball-bearing slide (2 pieces), front disconnect

STAINLESS STEEL RoHS

LG = slide length.
K = travel length.
CN = load rating (kg/pair).

Sold by the unit.

Part number	Material	Finish	K	LG	A	B	C	D	E	F	G	CN	Weight (g)
21-7-3576	304 stainless steel	raw	228.6	304.8	-	149.2	260.3	273	-	152.4	254	49	300
21-7-3577	304 stainless steel	raw	279.4	355.6	-	200	311.1	323.8	-	203.2	304.8	47	360
21-7-3562	304 stainless steel	raw	304.8	406.4	-	250.8	361.9	374.6	-	254	359.6	43	420
21-7-3563	304 stainless steel	raw	330.2	457.2	212.7	301.6	412.7	425.4	203.2	304.8	406.4	41	460
21-7-3564	304 stainless steel	raw	382	508	238.1	352.4	463.5	476.2	228.6	355.6	457.2	37	490
21-7-3565	304 stainless steel	raw	406.4	558.8	263.5	403.2	514.3	527	254	406.4	508	34	560
21-7-3566	304 stainless steel	raw	432.8	609.6	288.9	454	565.1	577.8	279.4	457.2	558.8	30	590
21-7-3567	304 stainless steel	raw	482.6	660.4	314.3	504.8	615.9	628.6	304.8	508	609.6	27	660
21-7-3568	304 stainless steel	raw	508	711.2	339.7	555.6	666.7	679.4	330.2	558.8	660.4	25	690

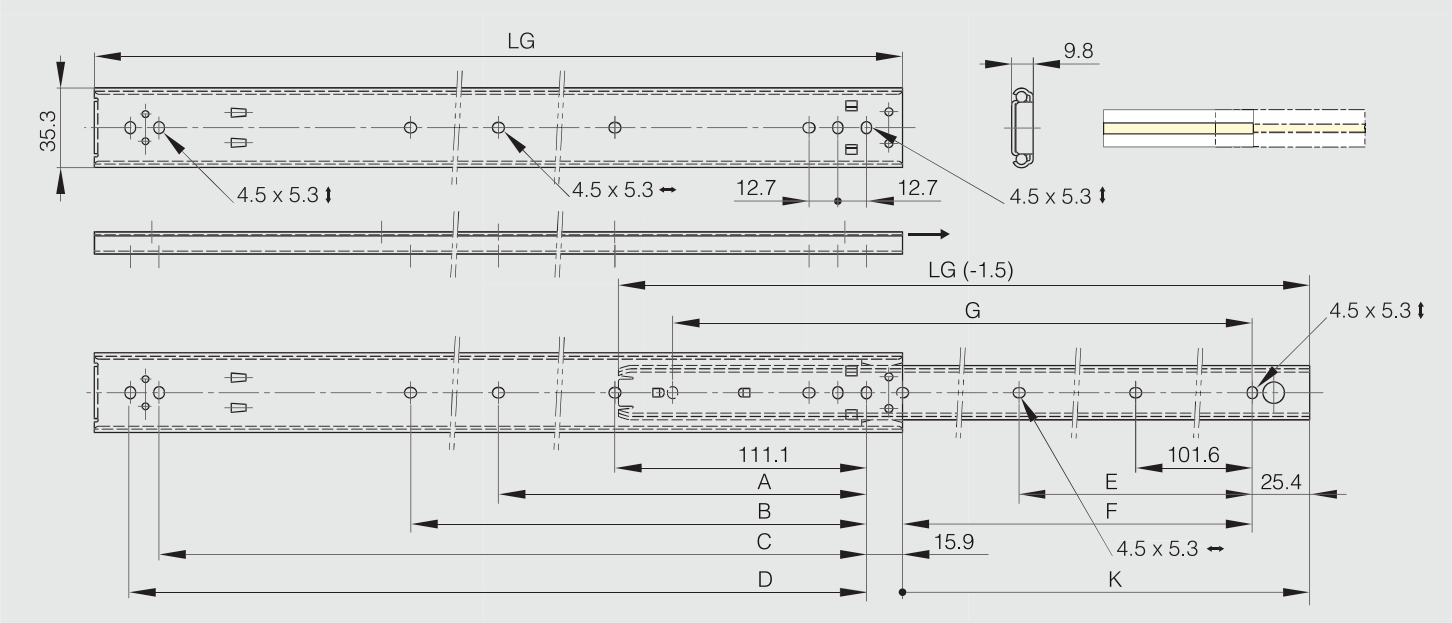

Full extension ball-bearing slide (3 pieces), front disconnect and positive lock

STAINLESS STEEL RoHS

LG = slide length.
K = travel length.
CN = load rating (kg/pair).

Sold by the unit.

Part number	Material	Finish	K	LG	A	B	C	D	E	F	G	H	CN	Weight (g)
21-7-3569	304 stainless steel	raw	421.7	406.4	250.8	361.9	374.6	-	-	349.2	361.9	374.6	57	840
21-7-3570	304 stainless steel	raw	472.5	457.2	301.6	412.7	425.4	212.7	-	400	412.7	425.4	53	950
21-7-3571	304 stainless steel	raw	523.3	508	352.4	463.5	476.2	238.1	-	450.8	463.5	476.2	49	1030
21-7-3572	304 stainless steel	raw	574.1	558.8	403.2	514.3	527	263.5	415.9	501.6	514.3	527	45	1150
21-7-3573	304 stainless steel	raw	624.9	609.6	454	565.1	577.8	288.9	466.7	552.4	565.1	577.8	42	1280
21-7-3574	304 stainless steel	raw	675.7	660.4	504.8	615.9	628.6	314.3	517.5	603.2	615.9	628.6	39	1400
21-7-3575	304 stainless steel	raw	726.5	711.2	555.6	666.7	679.4	339.7	568.3	654	666.7	679.4	36	1500

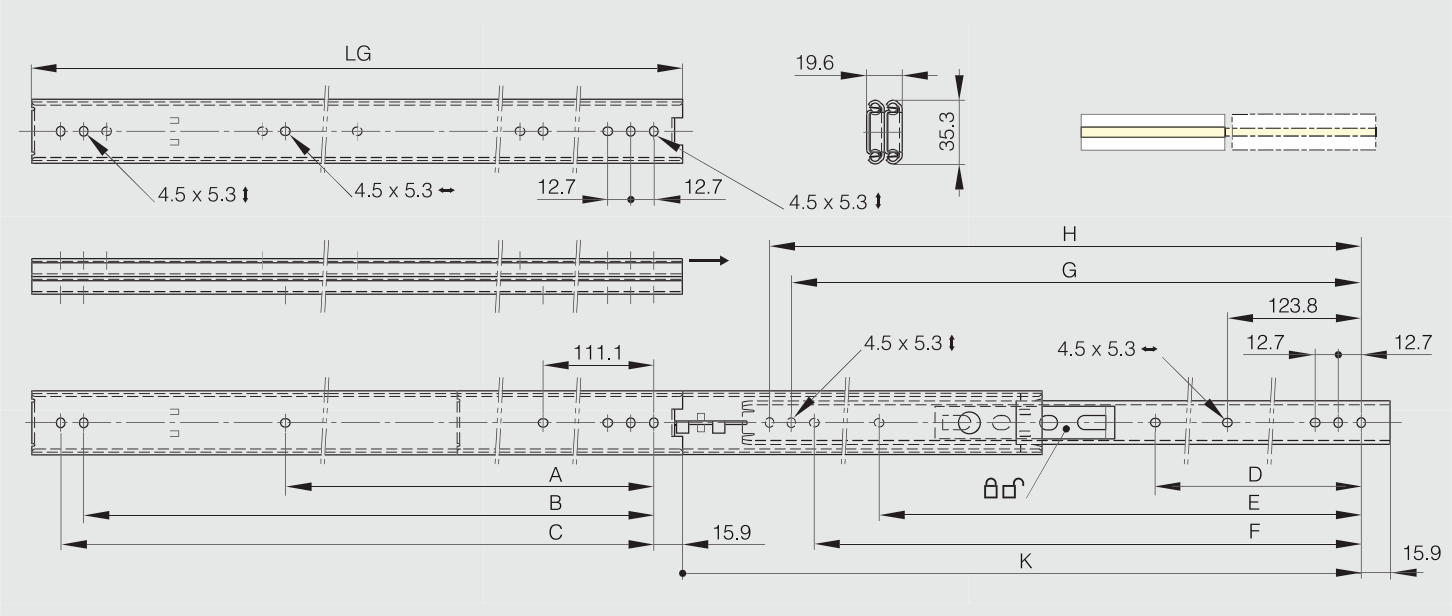

Full extension ball-bearing slide (3 pieces), front disconnect and positive stop

STAINLESS STEEL RoHS

LG = slide length.
K = travel length.
CN = load rating (kg/pair).

Sold by the unit.

Part number	Material	Finish	K	LG	A	B	C	D	CN	Weight (g)
21-7-3578	304 stainless steel	raw	327.2	304.8	-	149.2	260.3	273	60	620
21-7-3579	304 stainless steel	raw	378	355.6	-	200	311.1	323.8	59	720
21-7-3555	304 stainless steel	raw	428.4	406.4	-	250.8	361.9	374.6	57	820
21-7-3556	304 stainless steel	raw	479.2	457.2	212.7	301.6	412.7	425.4	56	920
21-7-3557	304 stainless steel	raw	530	508	238.1	352.4	463.5	476.2	54	1025
21-7-3558	304 stainless steel	raw	580.8	558.8	263.5	403.2	514.3	527	51	1125
21-7-3559	304 stainless steel	raw	631.6	609.6	288.9	454	565.1	577.8	49	1225
21-7-3560	304 stainless steel	raw	682.4	660.4	314.3	504.8	615.9	628.6	47	1325
21-7-3561	304 stainless steel	raw	733.2	711.2	339.7	555.6	666.7	679.4	45	1425

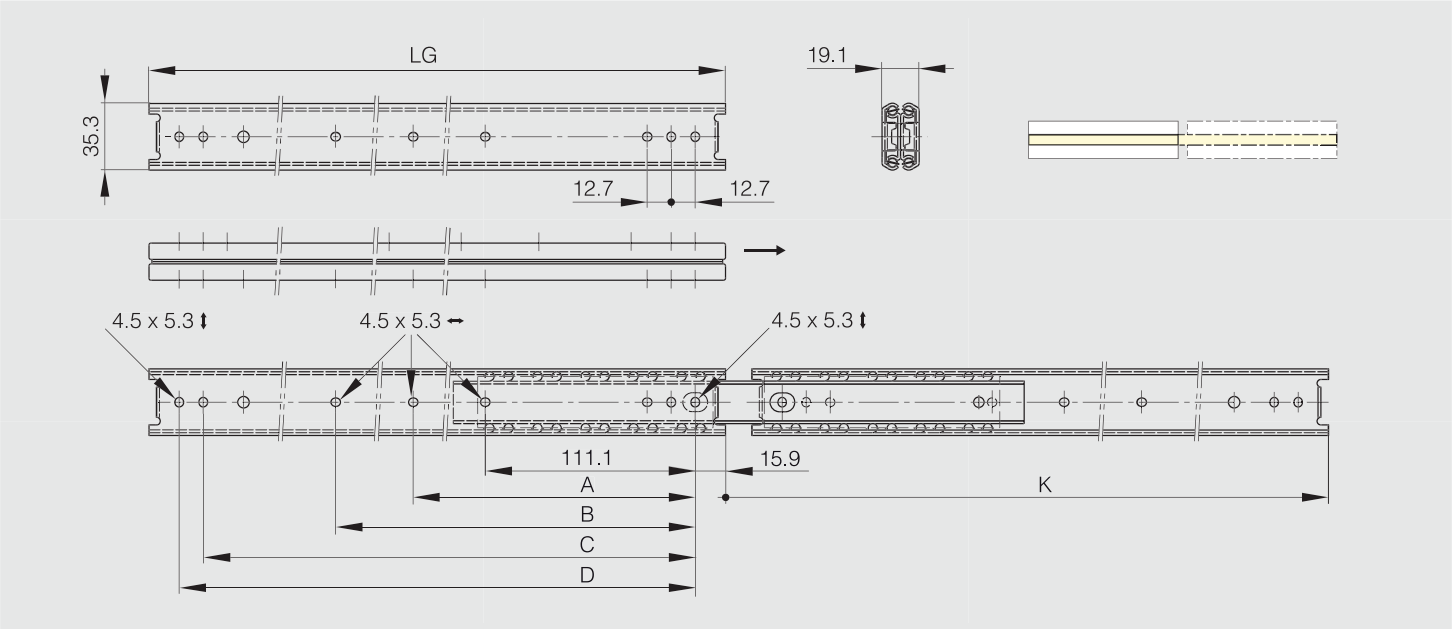

Heavy duty, full extension ball-bearing slide (3 pieces), front disconnect and positive stop

STAINLESS STEEL RoHS

LG = slide length.
K = travel length.
CN = load rating (kg/pair).

Sold by the unit.

Part number	Material	Finish	K	LG	A	B	C	CN	Weight (g)
21-7-3548	304 stainless steel	raw	420.6	406.6	-	250.8	374.6	259	2340
21-7-3549	304 stainless steel	raw	471.4	457.4	212.7	301.6	425.4	250	2500
21-7-3550	304 stainless steel	raw	522.2	508.2	238.1	352.4	476.2	241	2840
21-7-3551	304 stainless steel	raw	573	559	263.5	403.2	527	229	3250
21-7-3552	304 stainless steel	raw	623.8	609.8	288.9	454	577.8	216	3500
21-7-3553	304 stainless steel	raw	674.6	660.6	314.3	504.8	628.6	200	3840
21-7-3554	304 stainless steel	raw	725.4	711.4	339.7	555.6	679.4	182	4170

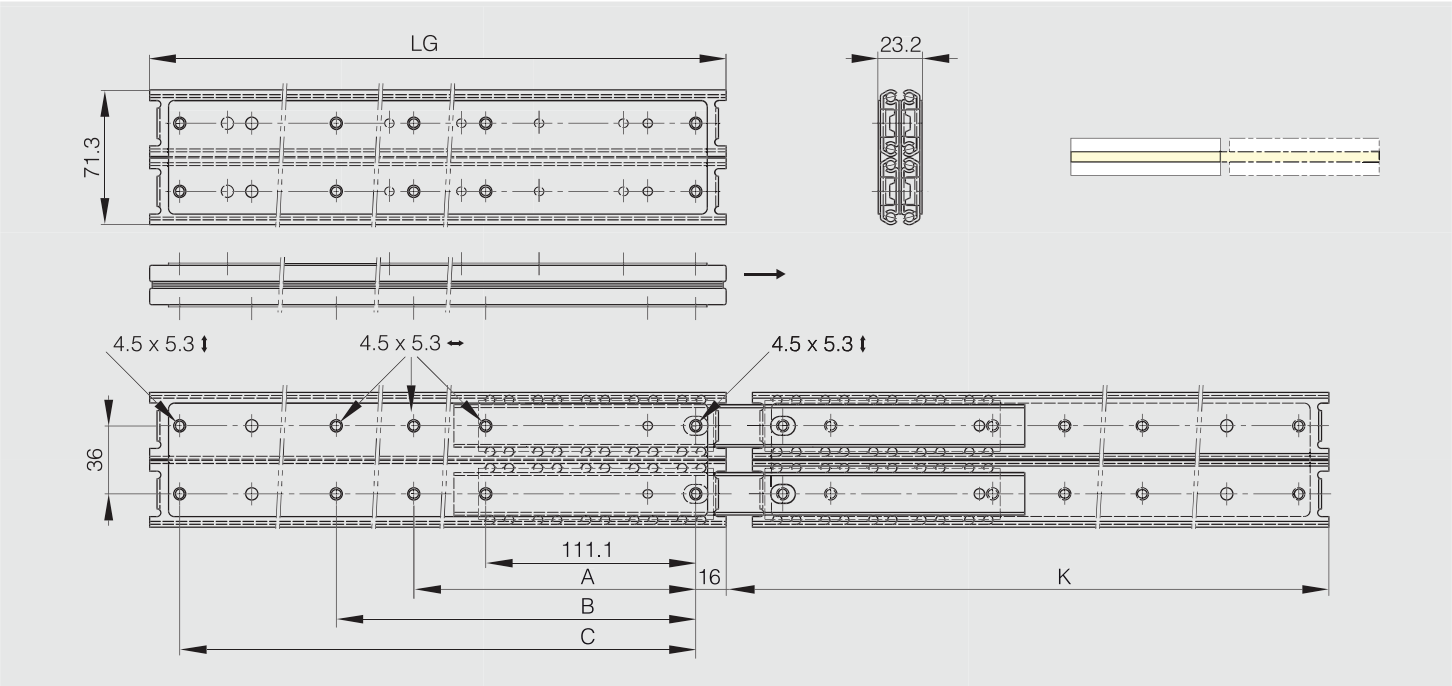

Full extension ball-bearing slide (3 pieces), soft-closing

STAINLESS STEEL RoHS

LG = slide length.
K = travel length.
CN = load rating (kg/pair).

Soft-close slide.
The drawer can be detached by pushing the lever while pulling the drawer out.
Soft-closes at 20 mm distance from closed position (LG = 300-350 mm) or 36 mm distance from closed position (LG = 400-700 mm).
The maximum width of the drawer is the slide length (LG) + 200 mm.

Sold in pairs.

Produced mainly in stainless steel, for a complete description of the materials contact us.

Part number	Material	Finish	K	LG	A	B	C	D	E	F	G	H	CN	Weight (g)
21-7-3584	304 stainless steel	raw	265	300	145	-	-	-	-	-	-	174	16	390
21-7-3585	304 stainless steel	raw	340	350	151	-	-	-	-	-	-	224	16	465
21-7-3586	304 stainless steel	raw	400	400	167	-	-	-	96	-	-	256	20	535
21-7-3587	304 stainless steel	raw	450	450	119	215	-	-	128	-	-	306	30	605
21-7-3588	304 stainless steel	raw	500	500	119	279	-	-	96	160	-	344	35	680
21-7-3589	304 stainless steel	raw	550	550	119	215	311	-	96	160	-	394	35	730
21-7-3590	304 stainless steel	raw	600	600	119	247	375	-	128	192	-	444	35	830
21-7-3591	304 stainless steel	raw	650	650	119	215	311	407	128	224	416	494	35	905
21-7-3592	304 stainless steel	raw	700	700	119	215	343	471	128	224	480	544	35	980

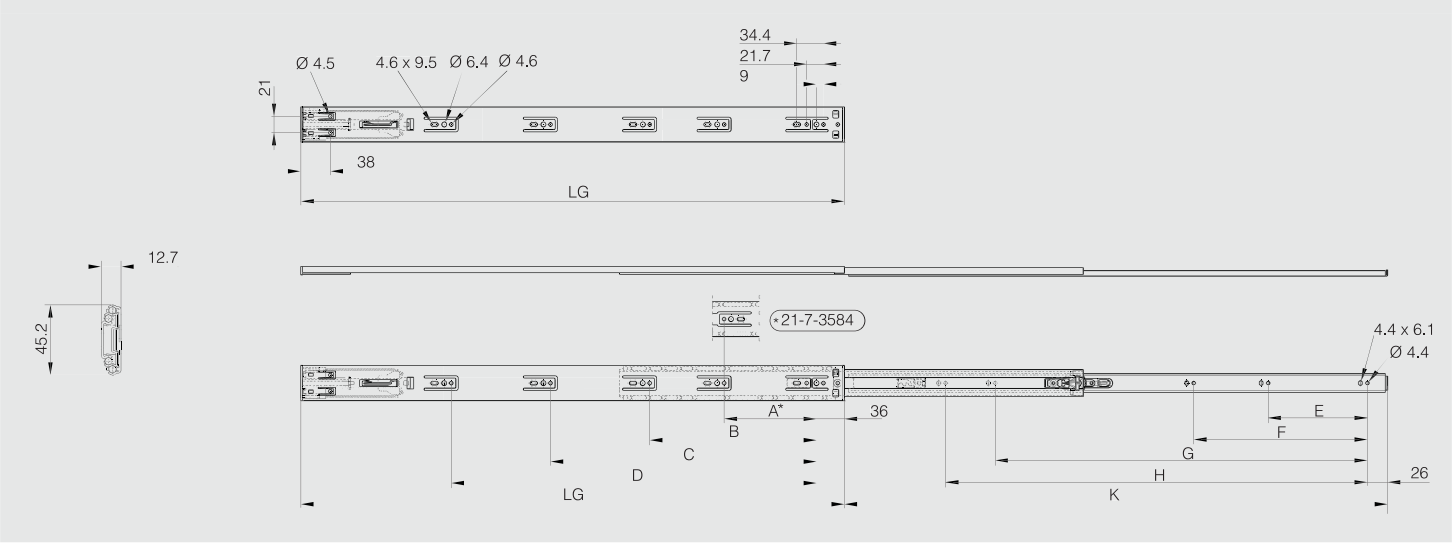

Notes

STAINLESS STEEL RANGE

HINGES

	Rolled knuckle continuous hinge - 32 mm width	390
	Rolled knuckle continuous hinge - 40 mm width	390
	Rolled knuckle continuous hinge - 20 mm width	391
	Rolled knuckle continuous hinge - 25 mm width	391
	Rolled knuckle continuous hinge - 30 mm width	391
	Rolled knuckle continuous hinge - 50 mm width	392
	Rolled knuckle continuous hinge - 57 mm width	392
	Rolled knuckle continuous hinge - 60 mm width	392
	Rolled knuckle continuous hinge - 63 mm width	393
	Rolled knuckle continuous hinge - 70 mm width	393
	Rolled knuckle continuous hinge - 76 mm width	393
	Rolled knuckle continuous hinge - 80 mm width	394
	Rolled knuckle continuous hinge - 100 mm width	394
	Rolled knuckle continuous hinge - 120 mm width	394
NEW	Interleaf continuous hinge	395
	Drilled continuous hinge with one cranked leaf	396
	Undrilled continuous hinge with one cranked leaf	396
	Continuous hinge with two cranked leaves	397
	Rolled knuckle continuous hinge “Imperial” dimension	397
	Concealed hinges A - 120° opening	398
	Concealed hinges B - 120° opening	398
	Concealed hinges with retractable pin	399
	Concealed pin hinges - 100° opening	399
	Concealed pin hinges - 120° opening	400
	Concealed hinges with spring - 95° opening	400
	Concealed hinges without spring - 95° opening	401
	Concealed hinge with friction - 90° opening	401

NEW		Concealed hinge with friction - 130° opening	402
		Concealed hinge - 180° opening	402
		Concealed heavy duty hinge for flush doors - 90° opening	403
		Concealed heavy duty hinge for flush doors - 90° opening	403
		Concealed heavy duty hinge for flush doors - 90° opening	404
		Concealed springloaded pin hinges A	404
		Concealed springloaded pin hinges B	405
NEW		Concealed hinge A - 90° opening	406
NEW		Concealed hinge B - 90° opening	406
NEW		Concealed hinge C - 90° opening	407
		Concealed hinges - 90° opening	408
		Concealed hinges - 125° opening	409
NEW		Concealed hinges (size M) - 125° opening	410
		Spring loaded concealed hinges - 90° opening	411
		Spring loaded concealed hinges - 150° opening	411
		Concealed hinges with two cranked leaves - undrilled - 120° opening - version A	412
		Concealed hinges with two cranked leaves - drilled - 120° opening - version A	412
		Concealed hinges with two cranked leaves - undrilled - 120° opening - version B	413
		Concealed hinges with two cranked leaves - drilled - 120° opening - version B	413
NEW		Long concealed spring hinges - 180 ° opening	414
NEW		Stainless steel hinges with concealed spring 0.35 N.m	415
NEW		Stainless steel hinges with concealed spring 0.7 N.m	415
NEW		Stainless steel hinges with concealed spring 1.3 N.m	416
NEW		Compact spring hinges 1.6 N.m	417
NEW		Compact spring hinges 2.2 N.m	417
NEW		Opening spring hinges 120 mm long	418
NEW		Closing spring hinges 120 mm long	418
NEW		Opening spring hinges 180 mm long	419

INDEX - STAINLESS STEEL RANGE

NEW		Closing spring hinges 180 mm long	419
NEW		Opening spring hinges 240 mm long	420
NEW		Closing spring hinges 240 mm long	420
		Spring hinges 50 mm long	421
		Spring hinge 60 mm long - with 4 holes	421
		Spring hinges 75 mm long - drilled	422
		Spring hinges 75 mm long - undrilled	422
		Spring hinges 80 mm long	423
		Spring hinges 160 mm long	423
		Spring hinges 170 mm long	424
		Cranked spring hinge 66 mm long	424
		Cranked spring hinge 60 mm long	425
		Lift-off rising hinge in stainless steel	425
NEW		Spring-assist torque hinge	426
NEW		Balance-adjustable lift-assist hinge	427
		Soft-close dampening hinge in stainless steel	428
NEW		Hinges with or without friction in stainless steel - friction torque 3 N.m	429
NEW		Hinges with or without friction in stainless steel - friction torque 4.5 N.m	429
NEW		Hinges with or without friction in stainless steel - friction torque 5 N.m	430
NEW		Hinges with or without friction in stainless steel - friction torque 8 N.m	430
NEW		Stainless steel torque hinge 2 N.m	431
NEW		Lift-off torque hinges	432
		Dual axis torque hinge - 30 x 60 mm	433
		Dual axis torque hinge - 50 x 76 mm	434
NEW		Torque hinge A	435
NEW		Torque hinge B	436
		Swivel torque hinge - torque 2 N.m	437
NEW		Swivel torque hinge with hole diameter 21.5 mm - 5 N.m	437

		Swivel torque hinge with hole diameter 34 mm - torque 7 N.m	438
		Hinge with stop at 115°	438
		Hinge with stop at 60°	439
NEW		Hinge with integrated stop at 60°	439
		Forged hinges - 3 knuckles	440
		Forged hinges with reversed leaves - 3 knuckles	440
		Forged hinges - 5 knuckles	441
		Half leaves for Modulo hinges - thickness 3 mm	442
		Half leaves for Modulo hinges - thickness 4 mm	442
		Half leaves for Modulo hinges - thickness 5 mm	442
		Half leaves for Modulo pin hinges - thickness 3 mm	443
		Half leaves for Modulo pin hinges - thickness 4 mm	443
		Half leaves for Modulo pin hinges - thickness 5 mm	443
		Expanded pin BG for Modulo system	444
		Headed pin BT for Modulo system	444
		Plug (VA) for Modulo system	444
NEW		Heavy duty hinge 115 x 70 mm - 5 knuckles	445
NEW		Heavy duty hinge 115 x 125 mm - 5 knuckles	445
NEW		Heavy duty hinge 115 x 155 mm - 5 knuckles	446
NEW		Heavy duty hinge 115 x 125 mm - 3 knuckles	446
NEW		Heavy duty hinge 115 x 155 mm - 3 knuckles	447
NEW		Heavy duty hinge 115 x 215 mm - 3 knuckles	447
		Heavy duty hinges - 65 x 230 mm	448
NEW		Heavy duty hinge 63.5 x 38 mm	448
NEW		Heavy duty hinge 76 x 50 mm	449
NEW		Stainless steel dual washer hinge 101.6 x 73 mm	449
NEW		Polymer bushing and stainless steel washer hinge 101.6 x 76.2 mm	450
NEW		Bronze bushing hinge 101.6 x 76.2 mm	450

INDEX - STAINLESS STEEL RANGE

NEW		Polymer shrouded bushing hinge 101.6 x 76.2 mm	451
NEW		Polymer shrouded bushing hinge 101.6 x 88.9 mm	451
NEW		Polymer bushing lift-off hinge	452
NEW		Stainless steel and bronze shrouded bushing hinge 114.3 x 114.3 mm	452
		Flat top weld-on stainless steel hinges - stainless steel pin - brass washer	453
		Heavy duty pin hinges	453
NEW		Square design stainless steel hinge	454
		Hinge 30 x 30 mm	454
NEW		Square hinges with two offset leaves and removable pin - with 4 holes	455
NEW		Square hinges with two offset leaves and removable pin - with 6 holes	455
		Square hinges with two offset leaves and riveted pin - with 4 holes	456
NEW		Square hinges with two offset leaves and riveted pin - with 6 holes	456
		Square hinges with no offset leaf and riveted pin - no holes	457
		Square hinges with no offset leaf and riveted pin - with 4 holes	457
NEW		Square hinges with no offset leaf and riveted pin - with 6 holes	458
		Hinge with nylon washers	458
		Hinge 50 x 30 mm	459
		Hinges 50 x 40 mm	459
		Hinges 60 x 35 mm	460
		Hinge 75 x 40 mm	460
		Lift-off hinges 80 x 60 mm - stainless steel	461
		Lift-off hinges 80 x 80 mm - stainless steel with 6 holes	461
		Lift-off hinges 100 x 82 mm - stainless steel with 8 holes	462
		Hinge for marine applications - 36.5 x 38 mm	463
		Hinge for marine applications - 36.5 x 56.5 mm	463
		Hinge for marine applications - 36.5 x 76 mm	464
		Hinges for marine applications - 36.5 x 65.5 mm	464
		Hinge for marine applications - 38.1 x 71.1 mm	465

	Hinge for marine applications - 52 x 70 mm	465
	Hinge for marine applications - 30 x 101 mm	466
	Hinge for marine applications - 38 x 178 mm	466
	Hinge for marine applications - 40.1 x 137.3 mm	467
	Small butt hinge with one cranked leaf 50 mm	467
	Small butt hinge with one cranked leaf and removable pin 50 mm	468
	Small butt hinges with one cranked leaf 38 mm	468
	Small butt hinge with one cranked leaf 60 mm	469
	Small butt hinge with one cranked leaf 66 mm	469
	Pin hinge with one cranked leaf	470
	Stainless steel hinge with removable pin	471
	Removable pin hinges with nylon washers	471
	Hinges 62 x 74 mm	472
	Hinge 20 x 65 mm	472
	Flag hinge without washer with two offset leaves	473
	Flag hinge with washer with two offset leaves	473
	Flag hinge without washer - drilled - flat knuckle	474
	Glass door hinge in brushed stainless steel	475
	Glass door hinge in stainless steel	475

LATCHING SYSTEMS

	Slam latch in stainless steel - bolt “nose-up”	476
	Slam latch in stainless steel - bolt “nose-down”	476
	Springloaded bolt - reversible bolt	477
	Paddle latches 68.5 x 84 mm	477
	Concealed springloaded pin hinges A	478
	Concealed springloaded pin hinges B	478
	Springloaded bolt with locking system B	479
	Push barrel bolt	479

INDEX - STAINLESS STEEL RANGE

Budget latch - square 6x6 - stainless steel	480
Budget latches - square 8x8	480
Spring budget latch	481
Strike for spring budget latch 16-1-4031	481
NEW Heavy duty budget latch - square 8x8	482
Barrel bolt in stainless steel	483
Stainless steel dual ball catches	484
Compact magnetic catch	485
Screw-on magnetic catch without counter plate - force 14 kg	485
Screw-on magnetic catch without counter plate - force 7 and14 kg - high temperature resistance	486
Rotary toggle latches	487
Spring loaded rotary toggle latches	487
Padlockable rotary toggle latches	488
Lockable toggle latch without strike	488
Strike for part number 16-1-4257	489
Toggle latches without strike - 50 mm	489
Strikes for part numbers 16-7-3525 and 16-7-3527	490
Toggle latch with strike - 52 mm	490
Toggle latches without strike - 58.1 mm	491
Strike for part number 16-7-3876	491
Toggle latch without strike - 80.2 mm	492
Strike for part number 16-7-3526	492
Toggle latch without strike - 88.5 mm	493
Strike for part number 16-7-3829	493
Other strike for part number 16-7-3829	494
Toggle latch without strike (consistent tension)	495
Strike for part number 16-7-3891	495
Padlockable toggle latch - 80.2 mm	496

	Strike for part number 16-7-3724	496
	Padlockable toggle latch - 97.6 mm	497
	Strike for part numbers 16-7-3884	497
	Spring loaded and padlockable toggle latch - 52 mm	498
	Strikes for part number 16-7-3760	498
	Spring loaded and padlockable toggle latch - 74 mm	499
	Strikes for part number 16-7-3766	499
	Spring loaded and padlockable toggle latch - 70.9 mm	500
	Strike for part number 16-7-3917	500
	Adjustable toggle latches with strike - padlockable - 82 mm to 118 mm	501
	Adjustable toggle latches with strike - padlockable - 174 mm	501
	Spring loaded toggle latch without strike 35.8 mm	502
	Strike for part number 16-7-3906	502
	Spring loaded toggle latches without strike - 70.8 mm	503
	Spring loaded toggle latch without strike - with push button	503
	Strikes for part numbers 16-7-3911, 16-7-3918 and 16-7-3920	503
	Spring loaded toggle latches without strike - 52 mm	504
	Strikes for part number 16-7-3736	504
	Spring loaded toggle latches without strike - 74 mm	505
	Strikes for part numbers 16-7-3745 and 16-7-3748	505
	Adjustable toggle latch with secondary lock and strike	506
	Adjustable toggle latch without strike 70.6 mm	507
	Strike for part number 16-7-3933	507
	Adjustable toggle latches with strike 82 mm and 103 mm long	508
	Adjustable toggle latch with strike 118 mm	508
	Adjustable toggle latch with strike 88 mm	509
	Adjustable toggle latch with strike 138 mm	509
	Adjustable toggle latch with secondary lock without strike	510

	Strike for part number 16-1-4231	510
	Other strikes for part number 16-1-4231	511
	Toggle latch without strike 62.5 mm	511
	Toggle latch without strike - 64 mm	512
	Toggle latch without strike - 67.6 mm	512
	Hooked toogle latch without strike	513

HANDLES

	Front mounted grab handles 107 mm in stainless steel	514
	Front mounted grab handles 106 and 126 mm	514
	Rear mounted grab handles 110 mm	515
	Rear mounted grab handles 95 to 150 mm	515
	Rear mounted grab handles 92 to 200 mm	516
	Drop handle with chamfered angles - load 35 kg	517
	Spring loaded handles - load 34 kg - 180° opening	517

	Spring loaded handles 130.3 mm - load 45 kg	518
	Spring loaded handle 130 mm - load 54 kg	518
	Retractable flush handles in stainless steel	519
	Bolt-on flush handle 120 x 60 mm	519
	Bolt-on flush handle 120 x 62 mm	520
	Bolt-on flush handle 138 x 88 mm	520

ACCESSORIES

	Support stays with automatic release - small size	521
	Support stays with automatic release in stainless steel	521
	Support stays with manual release	522
	Bracket	522
	Multi-angle lid stay with lock	523
	Support stay	523
	Heavy duty spring loaded stay	524

		Stay with safety stop	525
		Stays without bracket	525
NEW		Folding bracket	526
		Door holders	527
NEW		Hook	528
NEW		Double hook	528
NEW		Rotating swing hook	529
NEW		Swing hook	529
		3/4 extension ball-bearing slide (2 pieces), front disconnect	530
		Full extension ball-bearing slide (3 pieces), front disconnect and positive lock	531
		Full extension ball-bearing slide (3 pieces), front disconnect and positive stop	532
		Heavy duty, full extension ball-bearing slide (3 pieces), front disconnect and positive stop	533
		Full extension ball-bearing slide (3 pieces), soft-closing	534

Rolled knuckle continuous hinge - 32 mm width

Opening angle 270°. Other lengths and pin materials are available on request.
Specific drilling requirements are also available on request.

Part number	Material	Finish	A	B	C	D	E	Pin material	Note	Weight (g)
42-1-4346	304 stainless steel	raw	1800	32	1.2	3	30	stainless steel	undrilled	810
42-1-4460	304 stainless steel	raw	1950	32	1.5	3	12.5	stainless steel	undrilled	1030

Rolled knuckle continuous hinge - 40 mm width

Opening angle 270°. Other lengths and pin materials are available on request.
Specific drilling requirements are also available on request.

Part number	Material	Finish	A	B	C	D	E	F	G	S	Pin material	Note	Weight (g)
42-1-4257	304 stainless steel	raw	1020	40	1.2	3	30				stainless steel	undrilled	530
42-1-4347	304 stainless steel	raw	1800	40	1.2	3	30				stainless steel	undrilled	940
42-1-4350	304 stainless steel	raw	2040	40	1.2	3	30				stainless steel	undrilled	1068
42-1-4349	304 stainless steel	raw	2040	40	1.2	3	30	22.7	60	4.2	stainless steel	drilled	1045
42-1-4461	304 stainless steel	raw	1950	40	1.5	3	12.5				stainless steel	undrilled	1230
42-1-3301	304 stainless steel	raw	2040	40	1.5	4	15				stainless steel	undrilled	1420
42-1-4199	304 stainless steel	raw	2040	40	1.5	4	15	22.7	60	4	stainless steel	drilled	1441
42-1-3770	304 stainless steel	raw	2040	44	2	6	30				stainless steel	undrilled	2463
42-1-4083	316L stainless steel	raw	1020	40	1.5	4	15				stainless steel	undrilled	700
42-1-4001	316L stainless steel	raw	2040	40	1.5	4	15				stainless steel	undrilled	1400
42-1-3665	430 stainless steel	raw	2040	40	0.8	2	15				stainless steel	undrilled	650

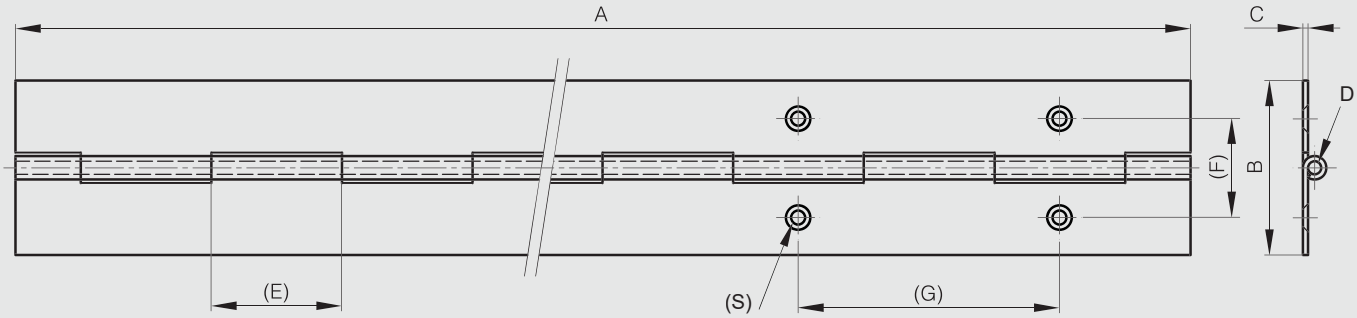

Rolled knuckle continuous hinge - 20 mm width

Opening angle 270°. Other lengths and pin materials are available on request.
Specific drilling requirements are also available on request.

Part number	Material	Finish	A	B	C	D	E	F	G	S	Pin material	Note	Weight (g)
42-1-3664	304 stainless steel	raw	2040	20	0.8	2	15				stainless steel	undrilled	377
42-1-4195	304 stainless steel	raw	2040	20	0.8	2	15	11.5	60	2.8	stainless steel	drilled	367

Rolled knuckle continuous hinge - 25 mm width

Opening angle 270°. Other lengths and pin materials are available on request.
Specific drilling requirements are also available on request.

Part number	Material	Finish	A	B	C	D	E	F	G	S	Pin material	Note	Weight (g)
42-1-3910	304 stainless steel	raw	1020	25	0.8	2	15				stainless steel	undrilled	280
42-1-3767	304 stainless steel	raw	2040	25	0.8	2	15				stainless steel	undrilled	448
42-1-4196	304 stainless steel	raw	2040	25	0.8	2	15	14	60	3.6	stainless steel	drilled	437
42-1-4096	304 stainless steel	raw	1800	25	1	2	15				stainless steel	undrilled	500
42-1-3949	304 stainless steel	raw	2040	25	1	2	15				stainless steel	undrilled	558
42-1-4546	316L stainless steel	raw	1980	25	0.8	2	15				stainless steel	undrilled	445

Rolled knuckle continuous hinge - 30 mm width

Opening angle 270°. Other lengths and pin materials are available on request.
Specific drilling requirements are also available on request.

Part number	Material	Finish	A	B	C	D	E	F	G	S	Pin material	Note	Weight (g)
42-1-3909	304 stainless steel	raw	1020	30	0.8	2	15				stainless steel	undrilled	255
42-1-3580	304 stainless steel	raw	2040	30	0.8	2	15				stainless steel	undrilled	522
42-1-4089	304 stainless steel	raw	1800	30	1	2	15				stainless steel	undrilled	500
42-1-3300	304 stainless steel	raw	2040	30	1	2	15				stainless steel	undrilled	670
42-1-4197	304 stainless steel	raw	2040	30	1	2	15	16.8	60	3.9	stainless steel	drilled	640
42-1-3950	304 stainless steel	raw	1995	30	1.5	4	30				stainless steel	undrilled	1283
42-1-3948	304 stainless steel	raw	1995	30	2	6	25				stainless steel	undrilled	1880
42-1-4082	316L stainless steel	raw	1020	30	1	2	15				stainless steel	undrilled	337
42-1-4000	316L stainless steel	raw	2040	30	1	2	15				stainless steel	undrilled	670

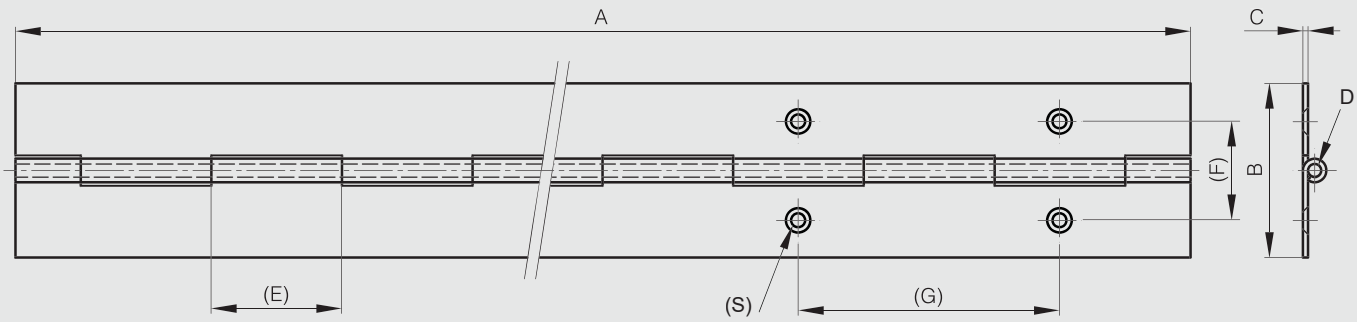

Rolled knuckle continuous hinge - 50 mm width

Opening angle 270°. Other lengths and pin materials are available on request.
Specific drilling requirements are also available on request.

Part number	Material	Finish	A	B	C	D	E	F	G	S	Pin material	Note	Weight (g)
42-1-4258	304 stainless steel	raw	1020	50	1.2	3	30				stainless steel	undrilled	650
42-1-4348	304 stainless steel	raw	1800	50	1.2	3	30				stainless steel	undrilled	1112
42-1-4353	304 stainless steel	raw	2040	50	1.2	3	30				stainless steel	undrilled	1300
42-1-4352	304 stainless steel	raw	2040	50	1.2	3	30	28	60	4	stainless steel	drilled	1270
42-1-4462	304 stainless steel	raw	1950	50	1.5	3	12.5				stainless steel	undrilled	1450
42-1-4219	304 stainless steel	raw	1800	50	1.5	4	15				stainless steel	undrilled	1500
42-1-3918	304 stainless steel	raw	1995	50	2	4	25				stainless steel	undrilled	2350
42-1-4259	316L stainless steel	raw	1000	50	1.2	3	30				stainless steel	undrilled	655
42-1-4354	316L stainless steel	raw	2040	50	1.2	3	30				stainless steel	undrilled	1310

Rolled knuckle continuous hinge - 57 mm width

Opening angle 270°. Other lengths and pin materials are available on request.
Specific drilling requirements are also available on request.

Part number	Material	Finish	A	B	C	D	E	Pin material	Note	Weight (g)
42-1-4220	304 stainless steel	raw	2160	57	1.5	4	15	stainless steel	undrilled	2000

Rolled knuckle continuous hinge - 60 mm width

Opening angle 270°. Other lengths and pin materials are available on request.
Specific drilling requirements are also available on request.

Part number	Material	Finish	A	B	C	D	E	F	G	S	Pin material	Note	Weight (g)
42-1-4086	304 stainless steel	raw	1020	60	2	6	30				stainless steel	undrilled	1400
42-1-3302	304 stainless steel	raw	2040	60	2	6	30				stainless steel	undrilled	2844
42-1-4201	304 stainless steel	raw	2040	60	2	6	30	35	60	4	stainless steel	drilled	2800
42-1-4085	316L stainless steel	raw	1020	60	2	6	30				stainless steel	undrilled	1470
42-1-4002	316L stainless steel	raw	2040	60	2	6	30				stainless steel	undrilled	2913

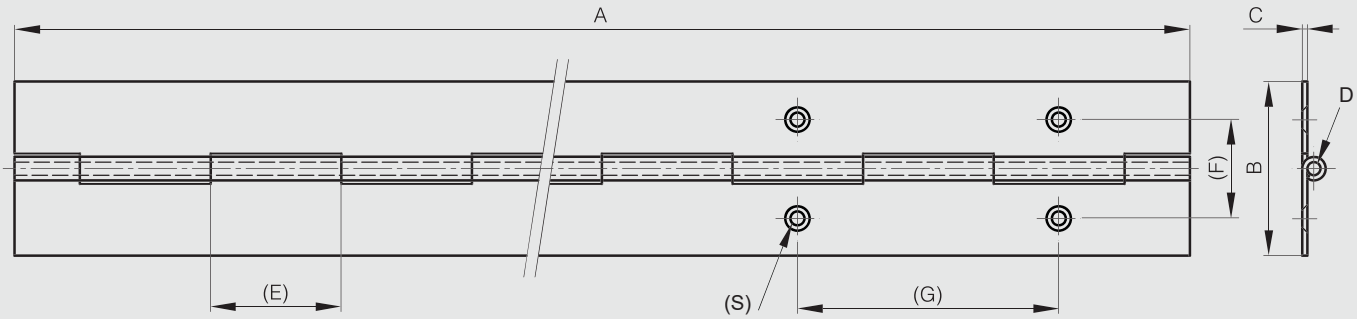

Rolled knuckle continuous hinge - 63 mm width

Opening angle 270°. Other lengths and pin materials are available on request.
Specific drilling requirements are also available on request.

Part number	Material	Finish	A	B	C	D	E	Pin material	Note	Weight (g)
42-1-4221	304 stainless steel	raw	1800	63	1.5	4	15	stainless steel	undrilled	1800

Rolled knuckle continuous hinge - 70 mm width

Opening angle 270°. Other lengths and pin materials are available on request.
Specific drilling requirements are also available on request.

Part number	Material	Finish	A	B	C	D	E	Pin material	Note	Weight (g)
42-1-4097	304 stainless steel	raw	1800	70	1.5	4	15	stainless steel	undrilled	1900
42-1-3859	304 stainless steel	raw	2040	70	2	6	30	stainless steel	undrilled	3219

Rolled knuckle continuous hinge - 76 mm width

Opening angle 270°. Other lengths and pin materials are available on request.
Specific drilling requirements are also available on request.

Part number	Material	Finish	A	B	C	D	E	Pin material	Note	Weight (g)
42-1-4094	304 stainless steel	raw	2160	76	1.5	4	15	stainless steel	undrilled	2400

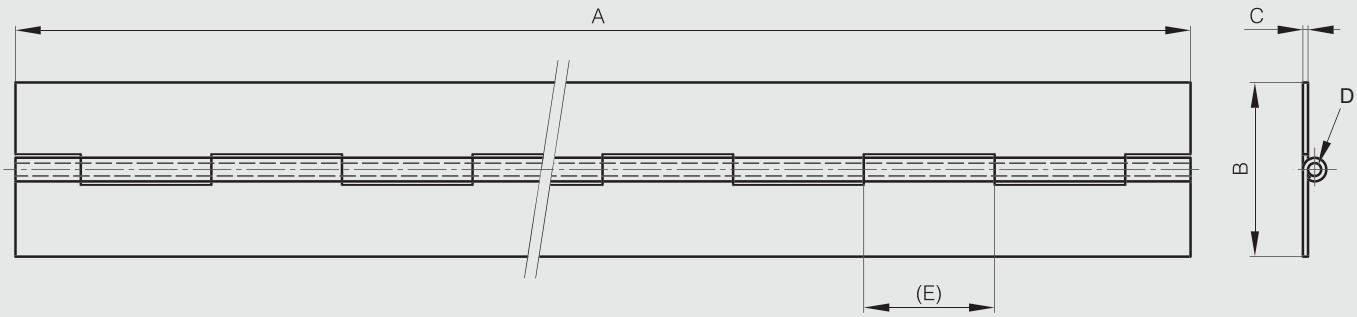

Rolled knuckle continuous hinge - 80 mm width

Opening angle 270°. Other lengths and pin materials are available on request.
Specific drilling requirements are also available on request.

Part number	Material	Finish	A	B	C	D	E	F	G	S	Pin material	Note	Weight (g)
42-1-4463	304 stainless steel	raw	1950	80	1.5	3	12.5				stainless steel	undrilled	2170
42-1-3304	304 stainless steel	raw	1000	80	3	6	40				stainless steel	undrilled	2530
42-1-3569	304 stainless steel	raw	2000	80	3	6	40				stainless steel	undrilled	5060
42-1-4547	304 stainless steel	raw	2000	80	3	6	40	35	60	5.2	stainless steel	drilled	5000
42-1-4548	316L stainless steel	raw	1980	80	2	6	30				stainless steel	undrilled	3470

Rolled knuckle continuous hinge - 100 mm width

Opening angle 270°. Other lengths and pin materials are available on request.
Specific drilling requirements are also available on request.

Part number	Material	Finish	A	B	C	D	E	Pin material	Note	Weight (g)
42-1-4458	304 stainless steel	raw	1995	100	3	10	40	stainless steel	undrilled	7110
42-1-4459	304 stainless steel	raw	2000	100	3	6	40	stainless steel	undrilled	5930

Rolled knuckle continuous hinge - 120 mm width

Opening angle 270°. Other lengths and pin materials are available on request.
Specific drilling requirements are also available on request.

Part number	Material	Finish	A	B	C	D	E	Pin material	Note	Weight (g)
42-1-4095	304 stainless steel	raw	2100	120	2	6	30	stainless steel	undrilled	5000

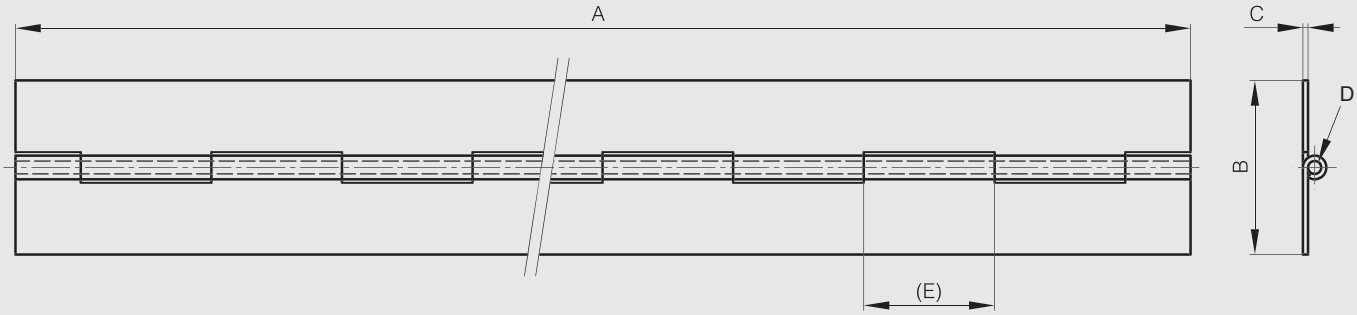

Interleaf continuous hinge

NEW

270° STAINLESS STEEL

The hinge sits directly on door frame for minimal gap (3mm).
Aesthetically stylish.
Maintenance free polymer shrouded bearings.

Tested to BS EN1935 Grade 14 (160kgs).

Produced mainly in stainless steel, for a complete description of the materials contact us.

	Part number	Material	Finish	A	B	C	D	E	S	Note	Weight (g)
NEW	42-7-4610	304 stainless steel	satin polished	2134	70.5	2.5	7	147	9	drilled	3400

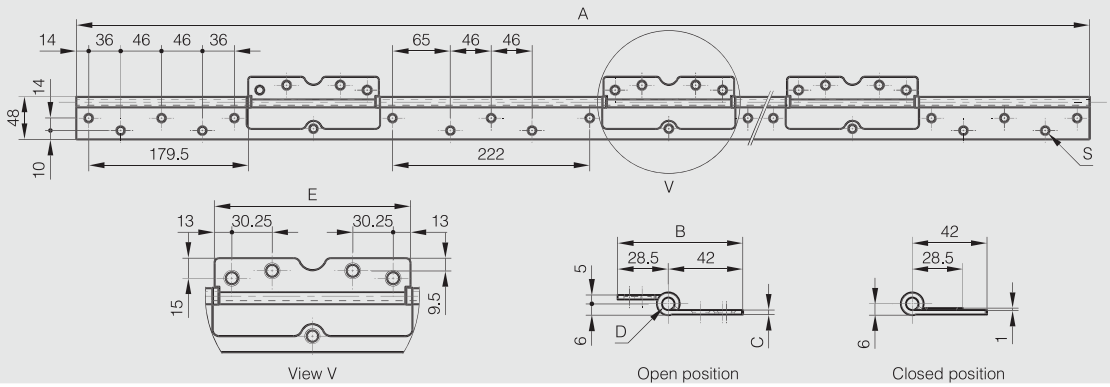

Drilled continuous hinge with one cranked leaf

Opening angle 270°. Other lengths and pin materials are available on request.
Specific drilling requirements are also available on request.

Part number	Material	Finish	A	B	C	D	E	F	G	H	S	Pin material	Note	Weight (g)
39-1-3630	304 stainless steel	raw	1995	31.5	1	2	30	7.5	60	20	3.5	304 stainless steel	drilled	860

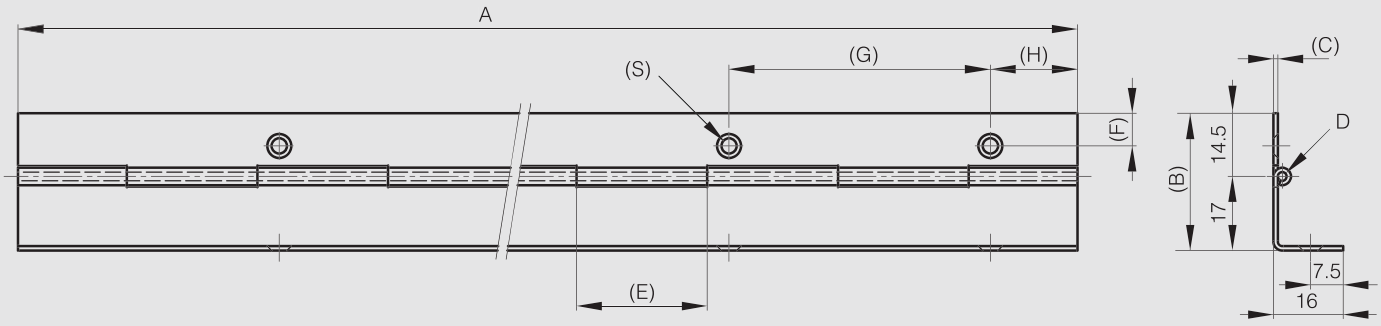

Undrilled continuous hinge with one cranked leaf

Opening angle 270°. Other lengths and pin materials are available on request.
Specific drilling requirements are also available on request.

Part number	Material	Finish	A	B	C	D	E	Pin material	Note	Weight (g)
39-1-3633	304 stainless steel	raw	1995	44	1.5	3	25	304 stainless steel	undrilled	1859
39-1-3300	430 stainless steel	raw	1600	44	1.5	3	25	304 stainless steel	undrilled	1430

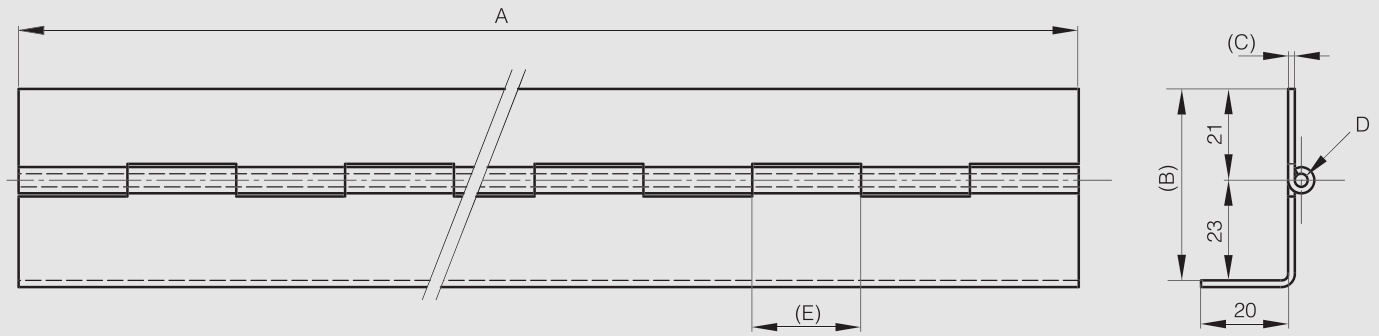

Continuous hinge with two cranked leaves

Opening angle 270°. Other lengths and pin materials are available on request.
Specific drilling requirements are also available on request.

Part number	Material	Finish	A	B	C	D	E	Pin material	Note	Weight (g)
39-1-3635	304 stainless steel	raw	2000	46	1.5	3	25	304 stainless steel	undrilled	1944

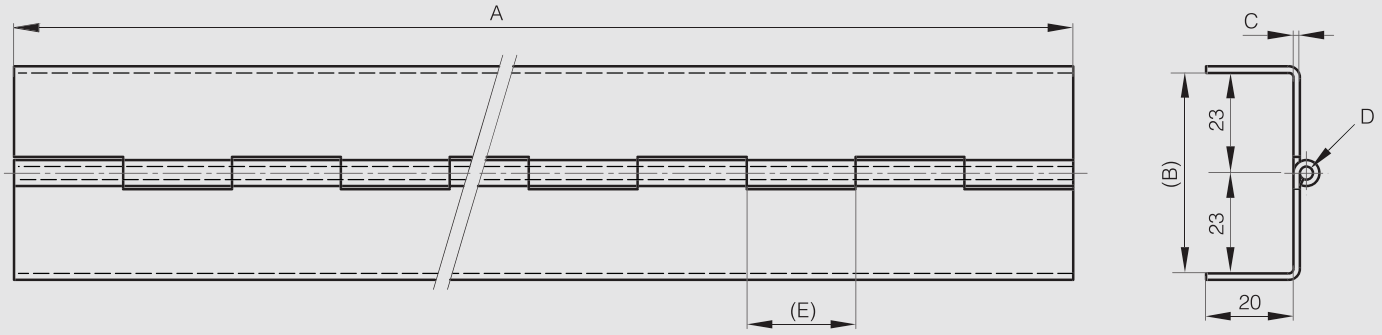

Rolled knuckle continuous hinge “Imperial” dimension

Part number	Material	Finish	A	B	C	D	E	Pin material	Note	Weight (g)
42-1-4089 UK	304 stainless steel	raw	6’	1″ 1/4	0.04″	0.08″	5/8″	stainless steel	undrilled	500
42-1-4094 UK	304 stainless steel	raw	7’	3″	1/16″	5/32″	5/8″	stainless steel	undrilled	2400
42-1-4095 UK	304 stainless steel	raw	7’	5″	0.08″	1/4″	1″ 1/4	stainless steel	undrilled	5000
42-1-4096 UK	304 stainless steel	raw	6’	1″	0.04″	0.08″	5/8″	stainless steel	undrilled	500
42-1-4097 UK	304 stainless steel	raw	6’	2″ 3/4	1/16″	5/32″	5/8″	stainless steel	undrilled	1900
42-1-4219 UK	304 stainless steel	raw	6’	2″	1/16″	5/32″	5/8″	stainless steel	undrilled	1500
42-1-4220 UK	304 stainless steel	raw	7’	2″ 1/4	1/16″	5/32″	5/8″	stainless steel	undrilled	2000
42-1-4221 UK	304 stainless steel	raw	6’	2″ 1/2	1/16″	5/32″	5/8″	stainless steel	undrilled	1800
42-1-4346 UK	304 stainless steel	raw	6’	1″ 1/4	3/64″	1/8″	3/4″	stainless steel	undrilled	810
42-1-4347 UK	304 stainless steel	raw	6’	1″ 1/2	3/64″	1/8″	3/4″	stainless steel	undrilled	940
42-1-4348 UK	304 stainless steel	raw	6’	2″	3/64″	1/8″	3/4″	stainless steel	undrilled	1112

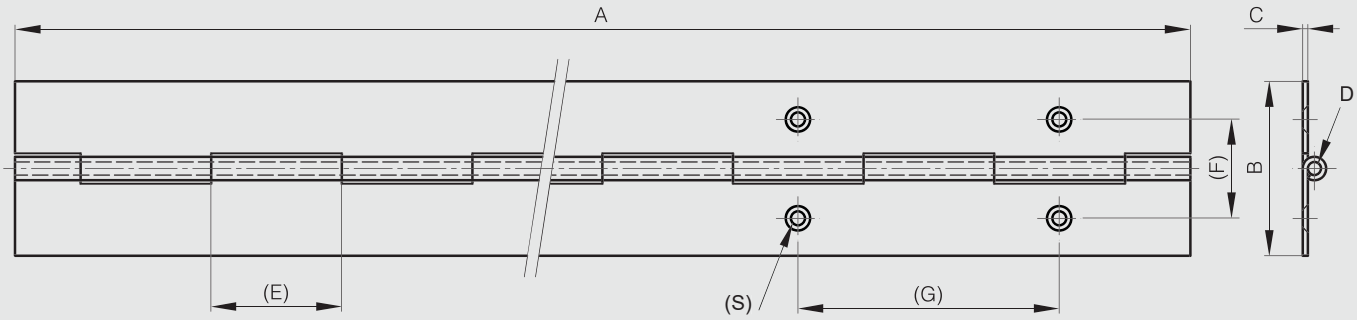

Concealed hinges A - 120° opening

120° STAINLESS STEEL RoHS

Natural POM pin diameter 6.
For pin with groove, optimal use of circlips DIN 6799 RS4 or O-ring 99-7-3723 (on request).
Produced mainly in stainless steel, for a complete description of the materials contact us.

Part number	Material	Finish	A	C	D	Pin material	Weight (g)
62-1-3570	304 stainless steel	raw	60	2.5	6	304 stainless steel pin	99
62-1-3584	304 stainless steel	raw	60	2.5	6	303 stainless steel grooved pin	98
62-1-3571	304 stainless steel	raw	60	2.5	6	Delrin POM pin	85

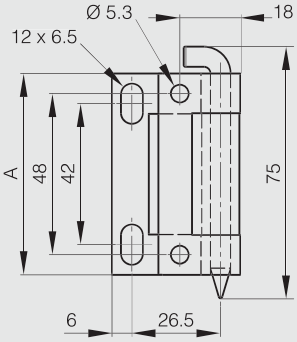

60-1-3760 & 62-1-3570

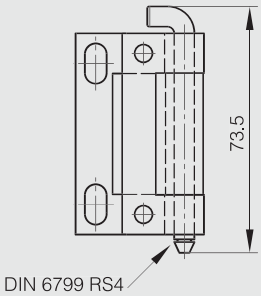

60-1-3779 & 62-1-3584

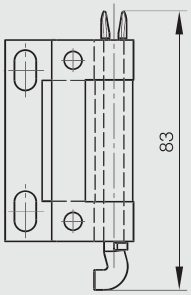

60-1-3761 & 62-1-3571

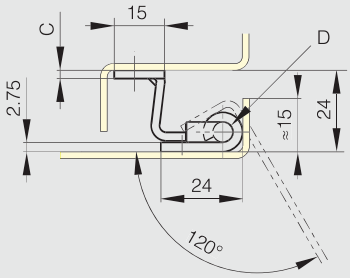

Concealed hinges B - 120° opening

120° STAINLESS STEEL RoHS

Natural POM pin diameter 6.
For pin with groove, optimal use of circlips DIN 6799 RS4 or O-ring 99-7-3723 (on request).
Produced mainly in stainless steel, for a complete description of the materials contact us.

Part number	Material	Finish	A	C	D	Pin material	Weight (g)
62-1-3572	304 stainless steel	raw	60	2.5	6	304 stainless steel pin	91
62-1-3585	304 stainless steel	raw	60	2.5	6	303 stainless steel grooved pin	91
62-1-3573	304 stainless steel	raw	60	2.5	6	Delrin POM pin	75

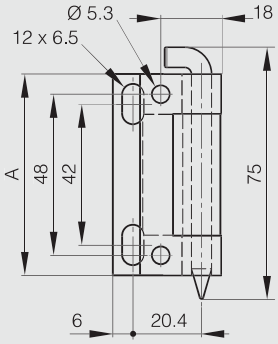

60-1-3762 & 62-1-3572

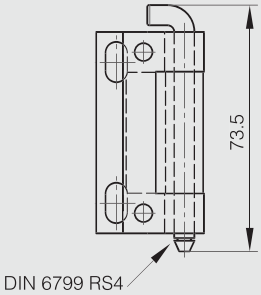

60-1-3778 & 62-1-3585

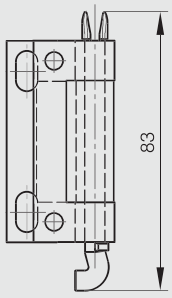

60-1-3763 & 62-1-3573

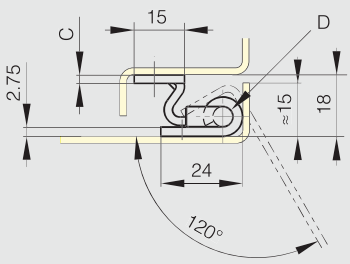

Concealed hinges with retractable pin

Quick-release concealed hinge for tool-free door removal with fixed retractable pin.

Part number	Material	Finish	A	B	E	W	Weight (g)
62-1-9000	304 stainless steel	raw	126	17.5	3	122°	95
62-1-9001	304 stainless steel	raw	126	20.5	4	117°	102
62-1-9002	304 stainless steel	raw	126	23.9	4.5	112°	105

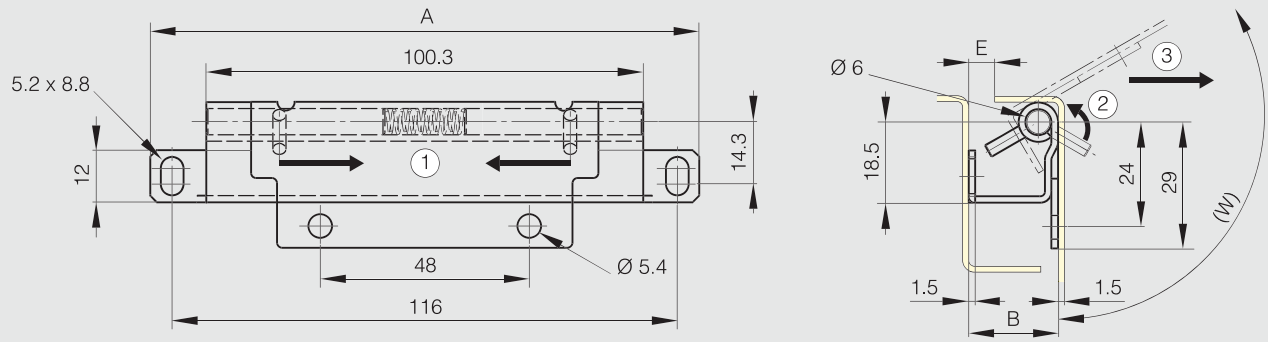

Concealed pin hinges - 100° opening

Non handed fitting.
Removable pin in 304 stainless steel.

Part number	Material	Finish	A	C	D	E	Weight (g)
12-1-3538	304 stainless steel	raw	80	2	4	40	45

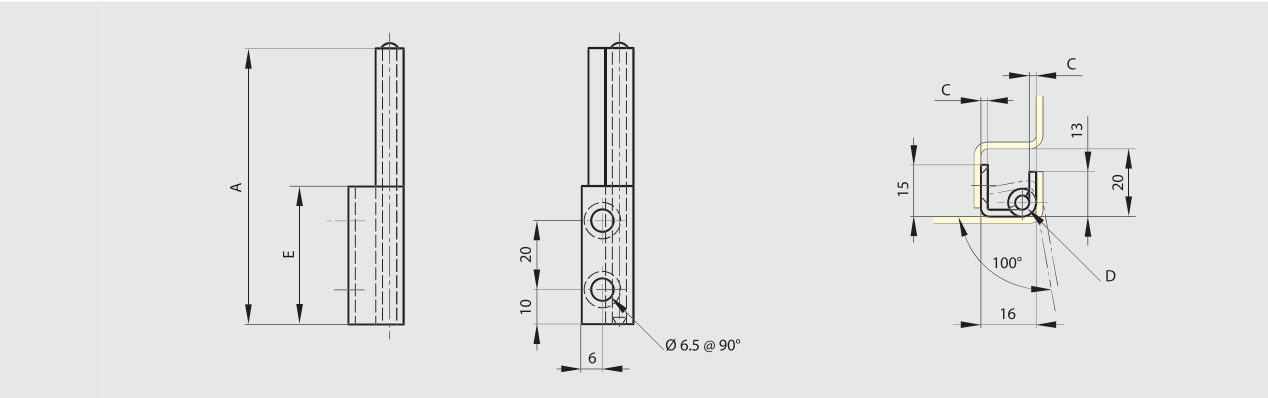

Concealed pin hinges - 120° opening

120° STAINLESS STEEL RoHS

Non handed fitting.
Removable pin in 304 stainless steel.

Part number	Material	Finish	A	C	D	E	Weight (g)
12-1-3528	304 stainless steel	raw	80	3	6	40	107

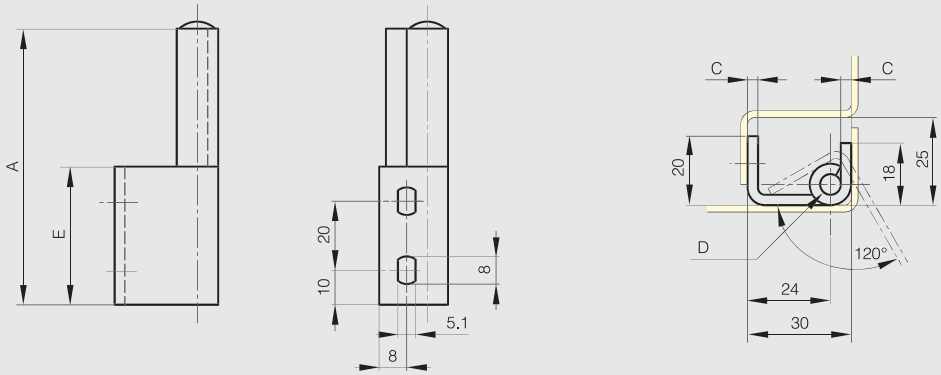

Concealed hinges with spring - 95° opening

90° STAINLESS STEEL RoHS

Concealed hinges with 2 positions:
- Rest position: door remains open with an angle of 10°.
- Opened position: door opens up to 95°.

Closing of door due to spring action and door remains slightly opened.
Applications for parcel box:
- Door automatically opens after code entry.
- Door doesn't remain in opened position.

Part number	Material	Finish	A	B	C	D	Weight (g)
71-1-3867	304 stainless steel	raw	51	75	3	6	200

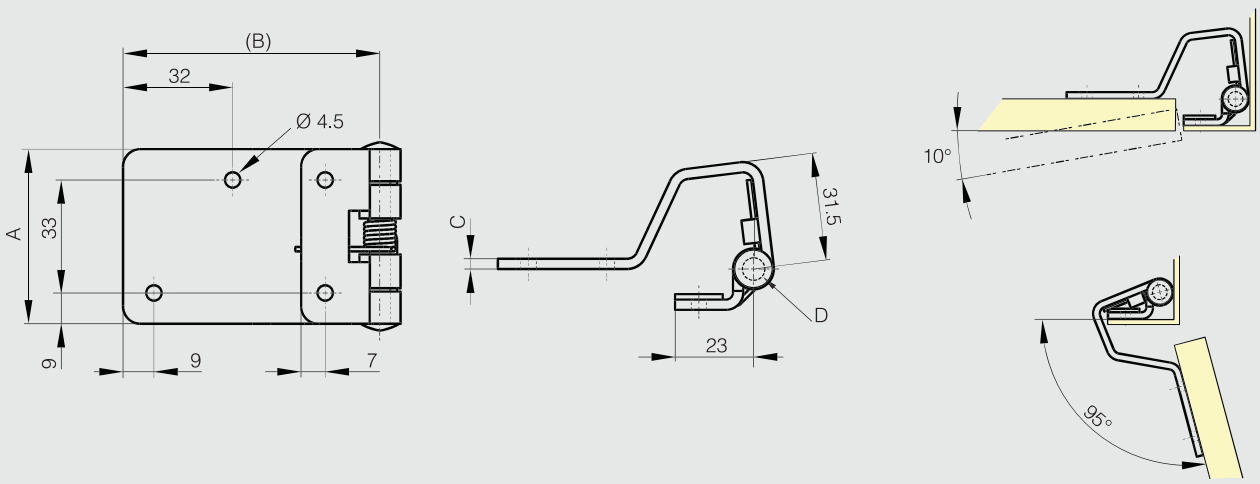

Concealed hinges without spring - 95° opening

90° STAINLESS STEEL RoHS

Part number	Material	Finish	A	B	C	D	Weight (g)
62-1-4008	304 stainless steel	raw	51	75	3	6	210

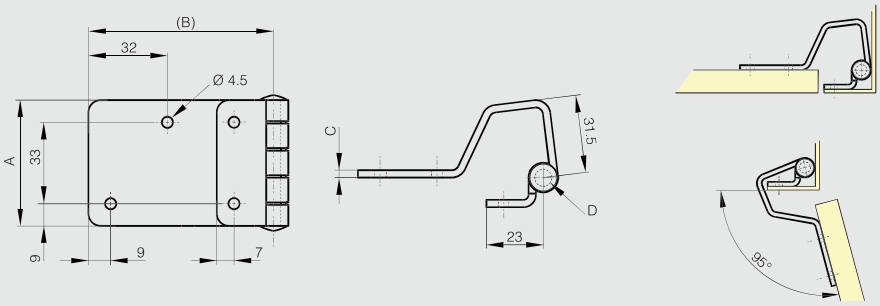

Concealed hinge with friction - 90° opening

90° STAINLESS STEEL RoHS

Initial torque (0.7 N.m) may vary from -20% to +40%.
For indoor use only.
Can be used both for horizontal and vertical applications.
Cycle life: 20,000 cycles.
Produced mainly in stainless steel, for a complete description of the materials contact us.

Part number	Material	Finish	A	B	C	Torque	Weight (g)
70-7-3623	304 stainless steel	polished	40	67	29.5	0.7 N.m	51

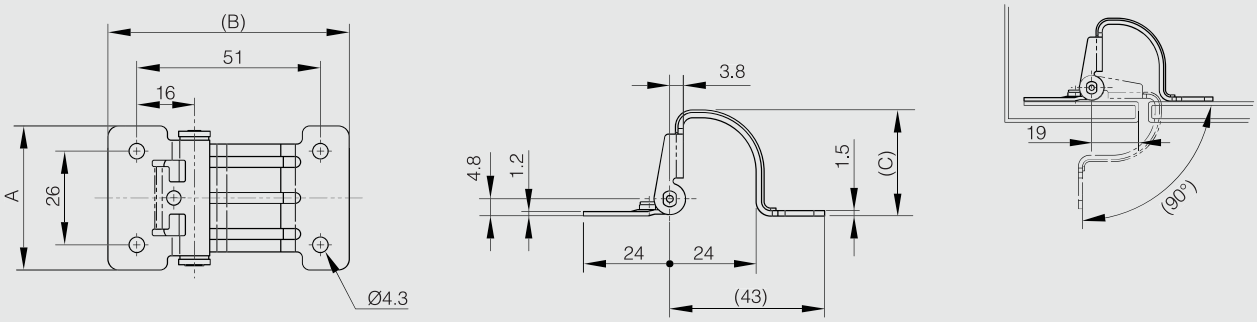

Concealed hinge with friction - 130° opening

NEW

130° STAINLESS STEEL RoHS

Initial torque (0.7 N.m) may vary from -20% to +40%.
For indoor use only.
Can be used both for horizontal and vertical applications.
Cycle life: 20,000 cycles.
Pin: 303 stainless steel
Produced mainly in stainless steel, for a complete description of the materials contact us.

	Part number	Material	Finish	A	B	C	Torque	Weight (g)
NEW	70-7-3658	304 stainless steel	polished	40	61	30	0.7 N.m	88

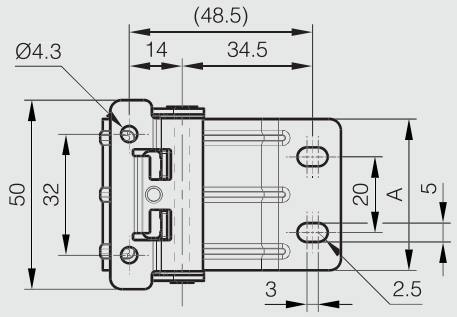

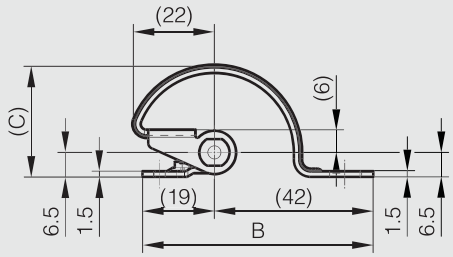

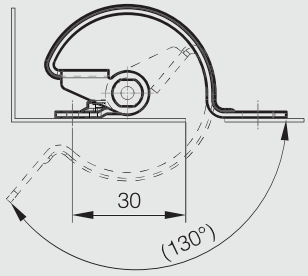

Concealed hinge - 180° opening

180° STAINLESS STEEL RoHS

Part number	Material	Finish	A	B	C	D	E	F	S	Weight (g)
70-7-3544	304 stainless steel	satin	50	19	38	14	18.2	11	2.7	33

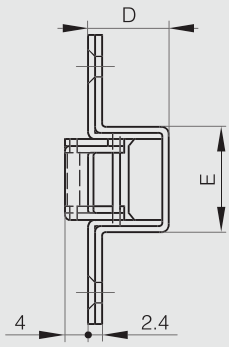

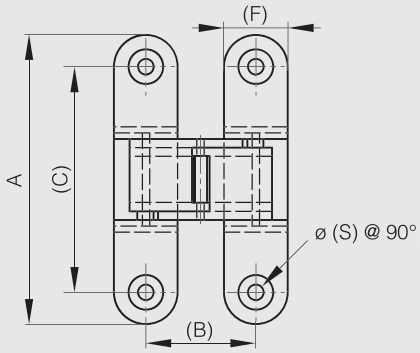

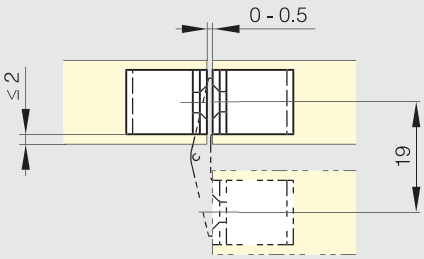

Concealed heavy duty hinge for flush doors - 90° opening

Concealed hinge for LH or RH application. The 2 main hinge parts have a central guide to prevent door from sagging during adjustement.

Part number	Material	Finish	A	B	C	D	Weight (g)
85-7-2331	304 stainless steel	raw	60	48	3	6	189

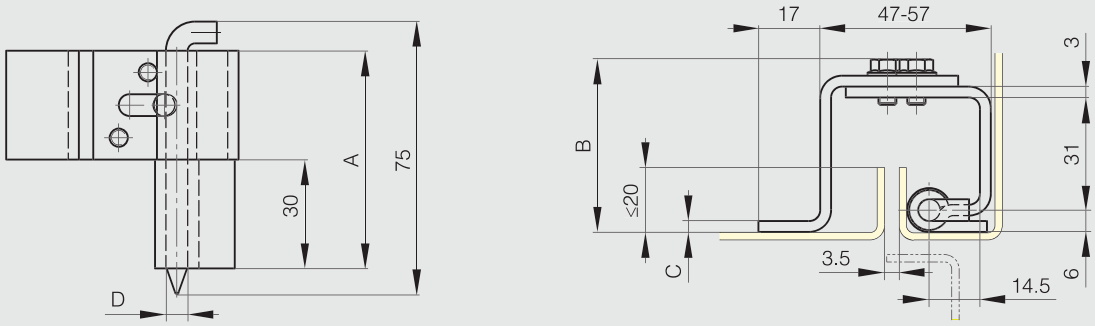

Concealed heavy duty hinge for flush doors - 90° opening

Concealed hinge for LH or RH application. The 2 main hinge parts have a central guide to prevent door from sagging during adjustement.

Part number	Material	Finish	A	B	C	D	Weight (g)
85-7-2334	304 stainless steel	raw	80	62	4	8	427

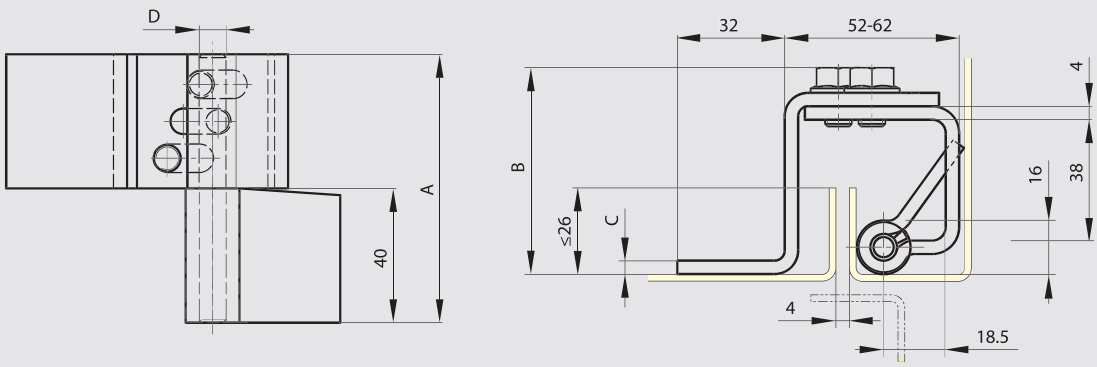

Concealed heavy duty hinge for flush doors - 90° opening

Concealed hinge for LH or RH application. The 2 main hinge parts have a central guide to prevent door from sagging during adjustement.

Part number	Material	Finish	A	B	C	D	Weight (g)
85-7-2332	304 stainless steel	raw	80	61	4	8	412

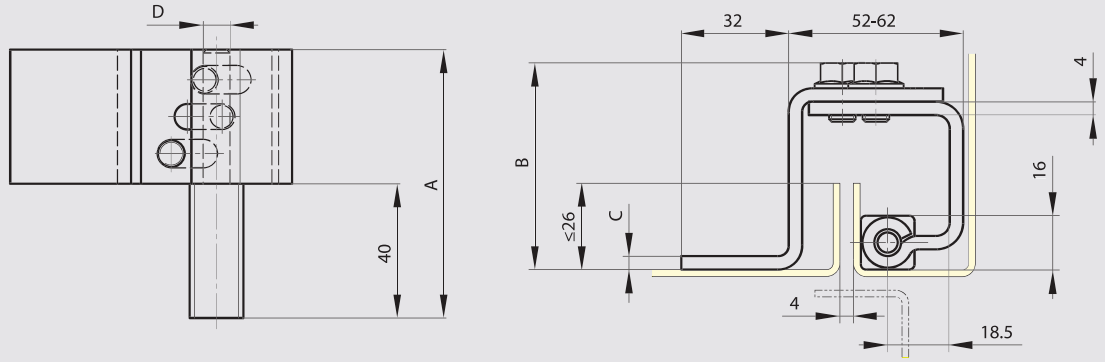

Concealed springloaded pin hinges A

Stainless steel spring.
304 stainless steel pin for hinges in stainless steel.
Circlip in 1.4122 stainless steel.

Part number	Material	Finish	A	B	C	D	K	Note	Weight (g)
12-1-3858	304 stainless steel	raw	82	18.2	2.8	6	12	type 2	46
12-1-3859	304 stainless steel	raw	82	18.2	2.8	6	12	type 1	46

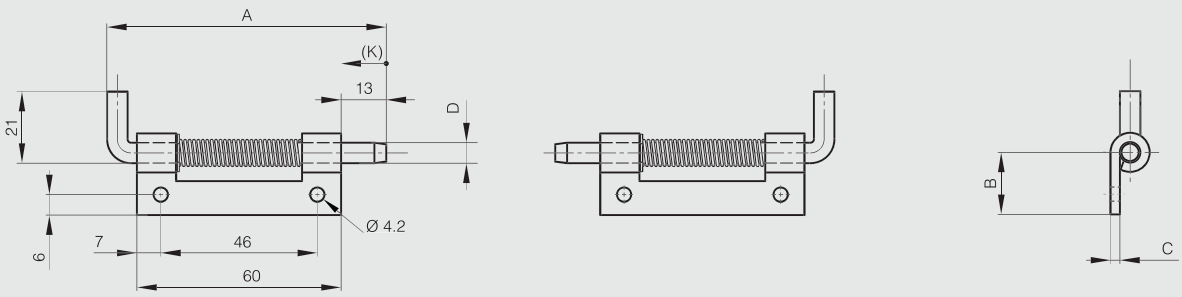

12-1-3857 & 12-1-3855 & 12-1-3859

12-1-3856 & 12-1-3854 & 12-1-3858

Concealed springloaded pin hinges B

Stainless steel spring.
304 stainless steel pin for hinges in stainless steel.
Circlip in 1.4122 stainless steel.

Part number	Material	Finish	A	B	C	D	K	Note	Weight (g)
12-1-3862	304 stainless steel	raw	82	21	14	5	12	type 2	39
12-1-3863	304 stainless steel	raw	82	21	14	5	12	type 1	39

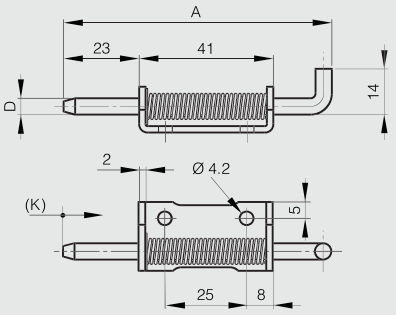

12-1-3951 & 12-1-3861 & 12-1-3863

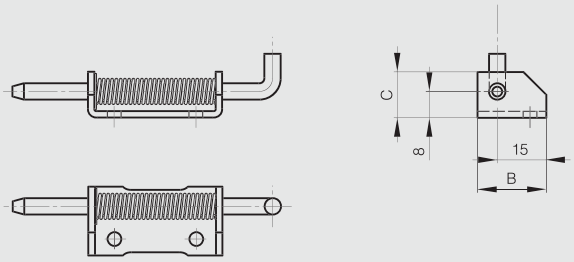

12-1-3950 & 12-1-3860 & 12-1-3862

Concealed hinge A - 90° opening

NEW

90° STAINLESS STEEL RoHS

Main features:
- For nested doors or surface mounted doors.
- For horizontal applications mainly.
- 90° opening max.

Same installation as «Concealed hinge C - 90° opening».
Door thickness max. 20mm. Minimal gap of 0.5 to 1.5mm between door and frame.

	Part number	Material	Finish	A	B	Weight (g)
NEW	70-1-3656	304 stainless steel	raw	30.2	126.5	83

Concealed hinge B - 90° opening

NEW

90° STAINLESS STEEL RoHS

Main features:
- For nested doors or surface mounted doors.
- For horizontal applications mainly.
- 90° opening max.

Same installation as «Concealed hinge C - 90° opening».
Door thickness max. 20mm. Minimal gap of 0.5 to 1.5mm between door and frame.

	Part number	Material	Finish	A	B	Weight (g)
NEW	70-1-3655	304 stainless steel	raw	30.2	126.5	83

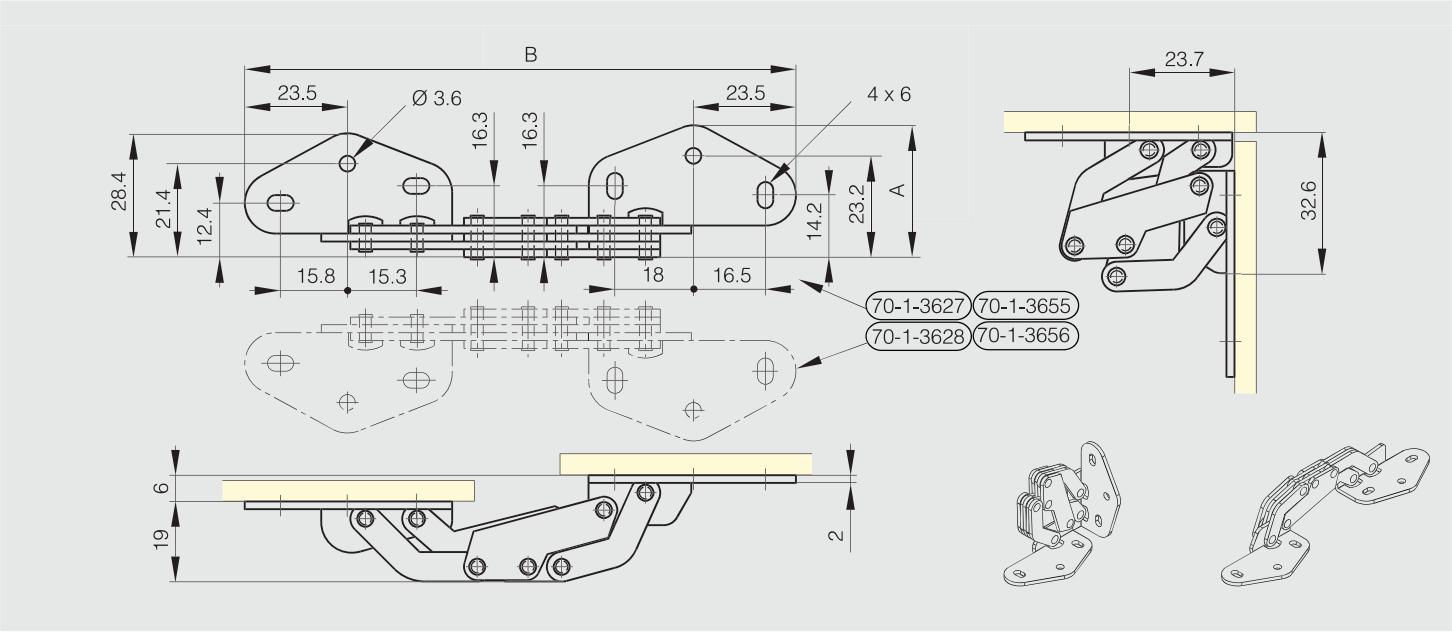

Concealed hinge C - 90° opening

NEW

90° STAINLESS STEEL RoHS

Main features:
- For nested doors or surface mounted doors.
- For horizontal applications mainly.
- 90° opening max.

Door thickness max. 20mm. Minimal gap of 0.5 to 1.5mm between door and frame.

	Part number	Material	Finish	A	B	Weight (g)
NEW	70-1-3654	304 stainless steel	raw	58.6	126.5	160

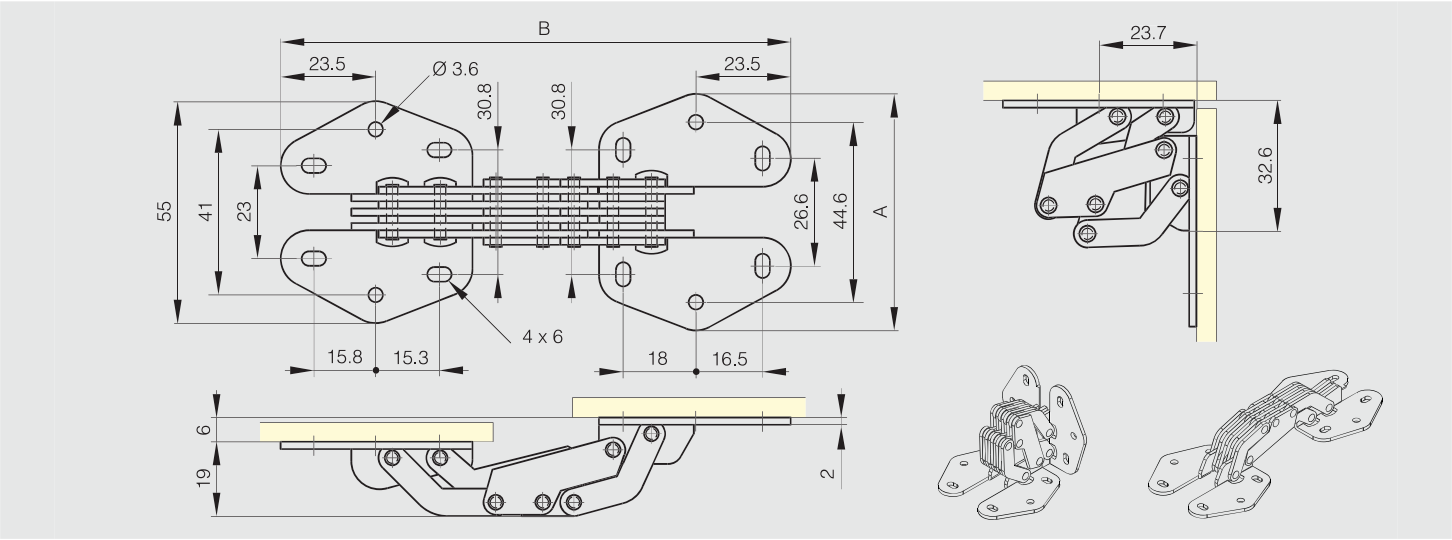

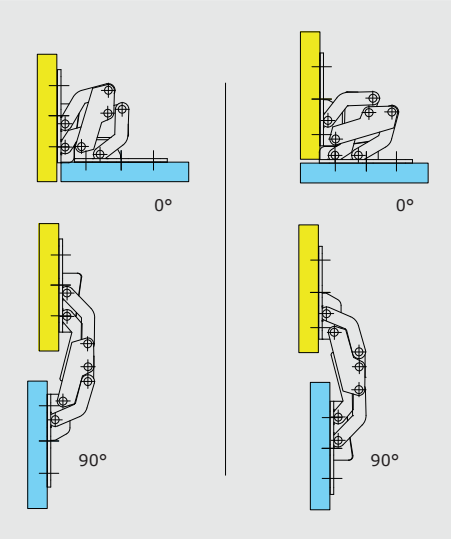

Nested door assembly shown

Surface mounted assembly shown

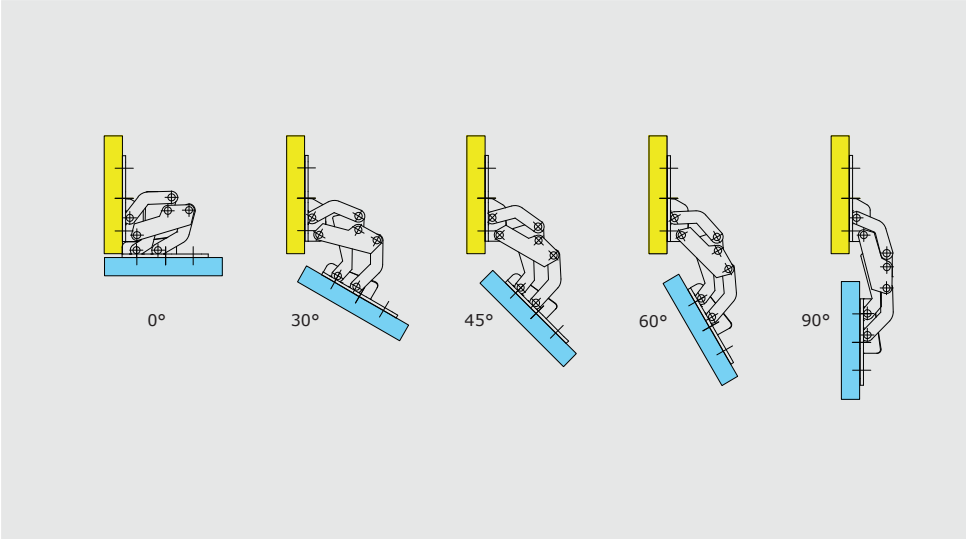

Surface mounted assembly shown

Concealed hinges - 90° opening

90° STAINLESS STEEL RoHS

Pins and links in 316L stainless steel.
Mounting features:
- For nested doors or surface mounted doors.
- LH or RH options.
- For horizontal or vertical applications.

Part number	Material	Finish	A	B	C	Weight (g)
70-1-3625	316L stainless steel	raw	44	29	32	65

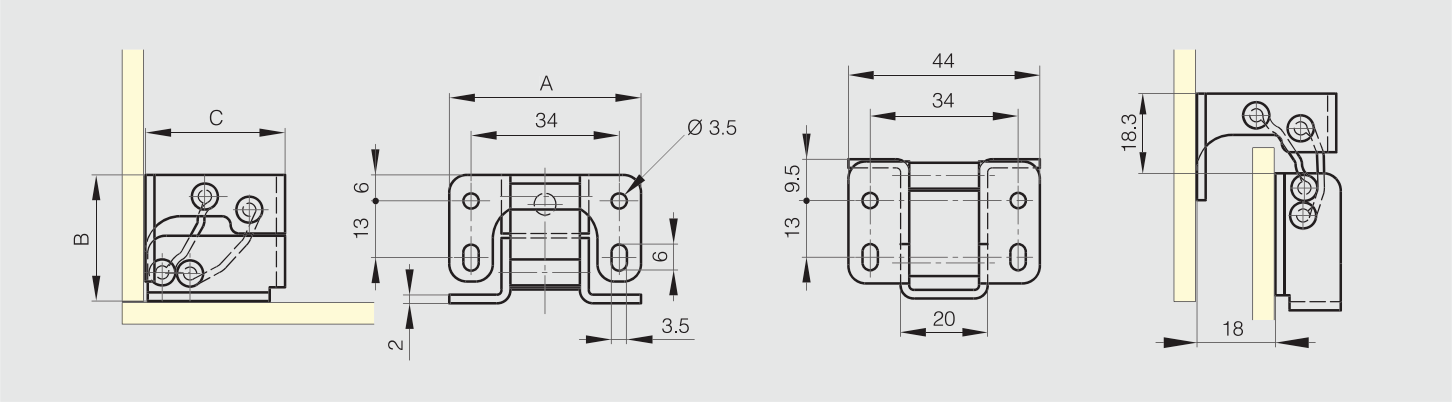

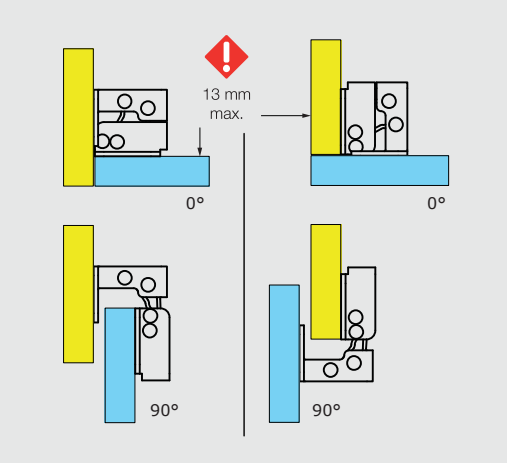

Nested door assembly shown

Surface mounted assembly shown

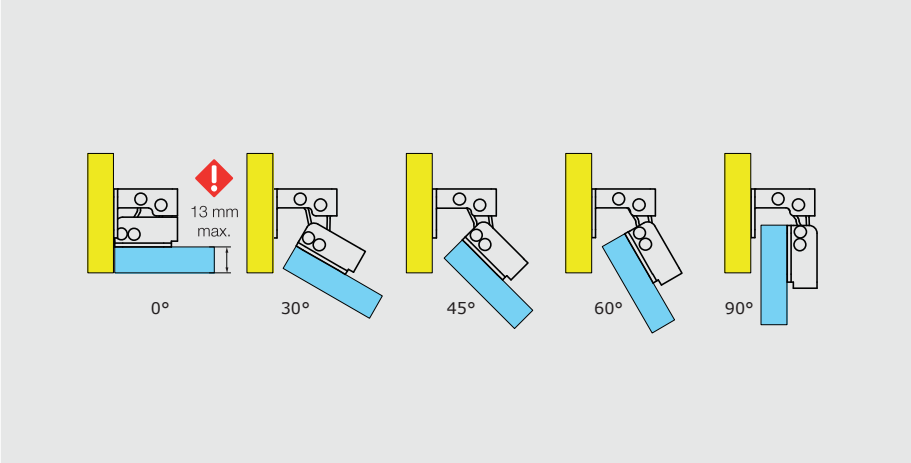

Nested door assembly shown

Concealed hinges - 125° opening

120° STAINLESS STEEL RoHS

Links in aluminium.
Pins in 304 Cu stainless steel.
Mounting features:
- For nested doors or surface mounted doors.
- LH or RH options.
- For horizontal or vertical applications.

Opening angle differs according to door thickness:
- 2 mm thickness: opening angle of 125°.
- 8 mm thickness: opening angle of 110°.
- 13 mm thickness: opening angle of 100°.

Please ask us for bespoke solutions.
Produced mainly in stainless steel, for a complete description of the materials contact us.

Part number	Material	Finish	A	B	C	Weight (g)
70-1-3640	316L stainless steel	raw	44	29	32	60

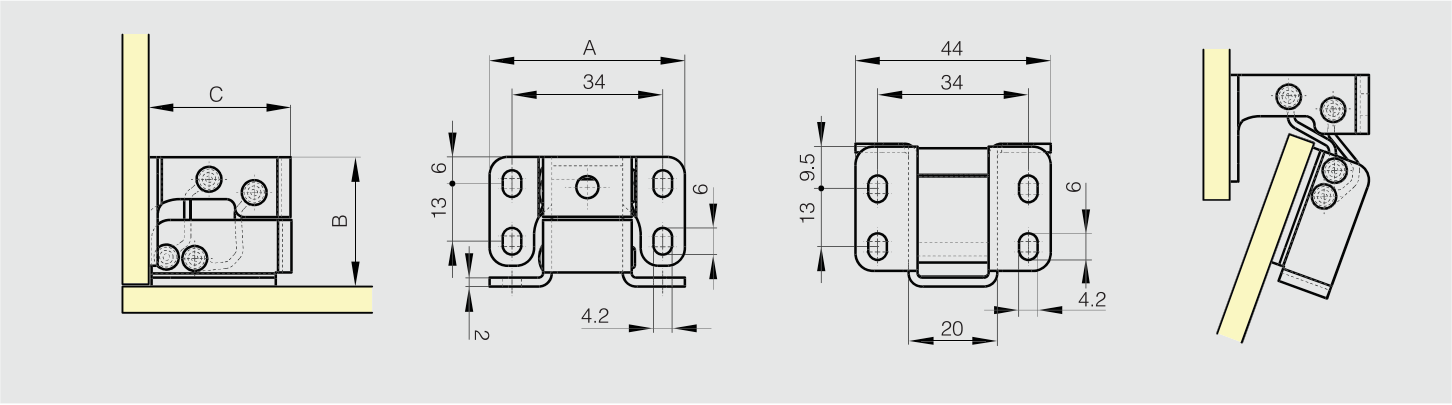

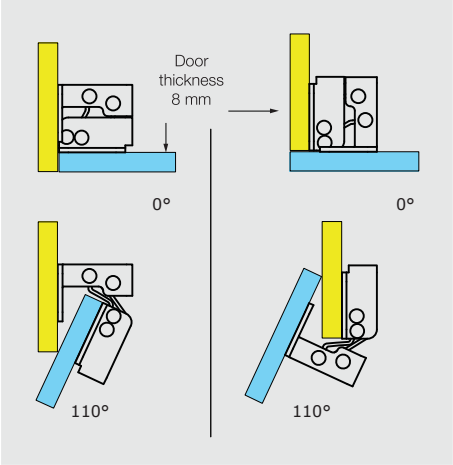

Nested door assembly shown

Surface mounted assembly shown

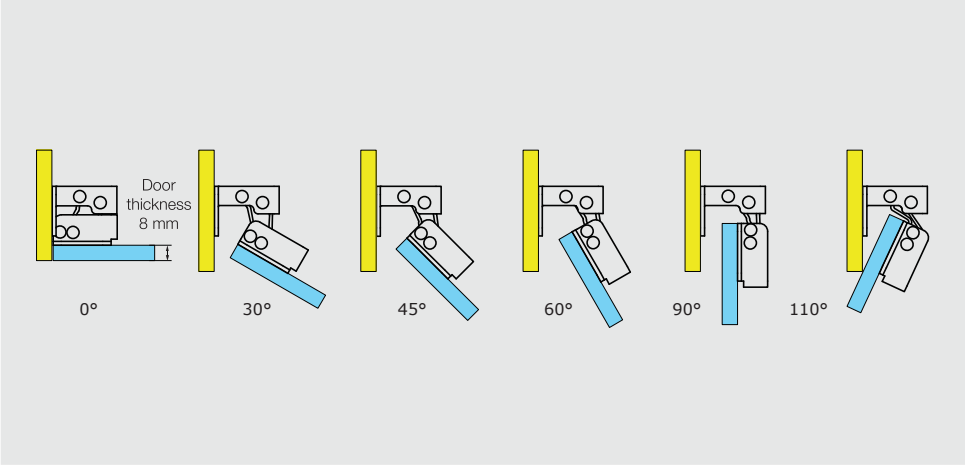

Nested door assembly shown

Concealed hinges (size M) - 125° opening

NEW

120° STAINLESS STEEL RoHS

Links in aluminium.
Pins in 304 Cu stainless steel.

Mounting features:
- For nested doors or surface mounted doors.
- LH or RH options.
- For horizontal or vertical applications.

Opening angle differs according to door thickness:
- For thickness up to 10 mm: opening angle of 125°.
- 15 mm thickness: opening angle of 115°.
- 20 mm thickness: opening angle of 108°.

Please ask us for bespoke solutions.

	Part number	Material	Finish	A	B	C	Weight (g)
NEW	70-1-3648	316L stainless steel	raw	77	55.2	54	250

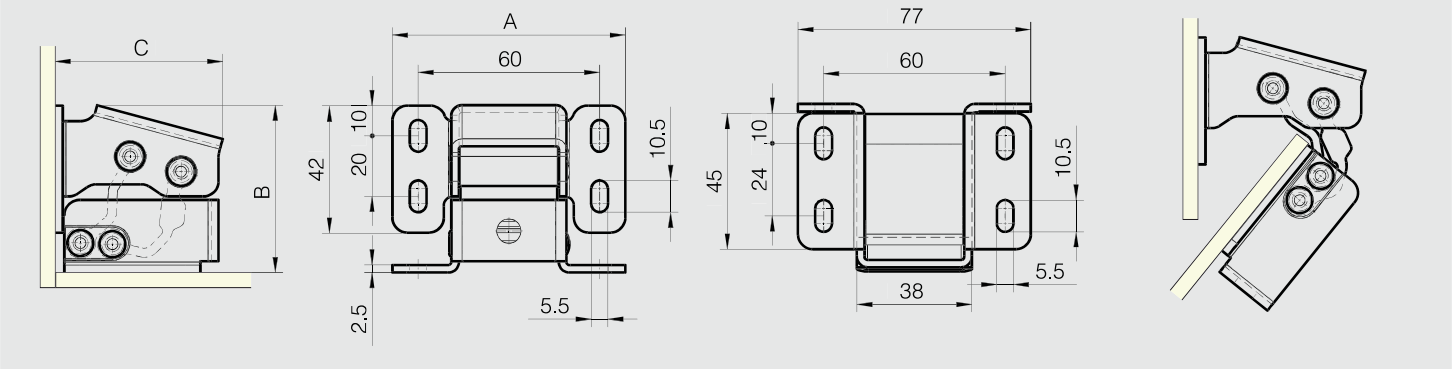

Spring loaded concealed hinges - 90° opening

Produced mainly in stainless steel, for a complete description of the materials contact us.

90° STAINLESS STEEL RoHS

Part number	Material	Finish	A	B	C	Weight (g)
70-1-9000	316 stainless steel	raw	44	104.5	26	70

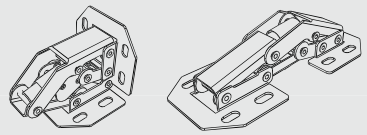

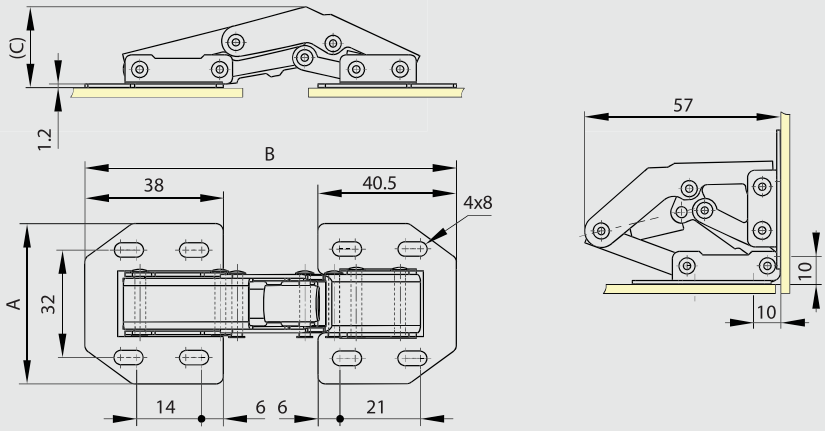

Spring loaded concealed hinges - 150° opening

For door thickness max: 20 mm.
Produced mainly in stainless steel, for a complete description of the materials contact us.

150° STAINLESS STEEL RoHS

Part number	Material	Finish	A	B	C	Weight (g)
70-1-9002	304 stainless steel	raw	52	121	73.5	140

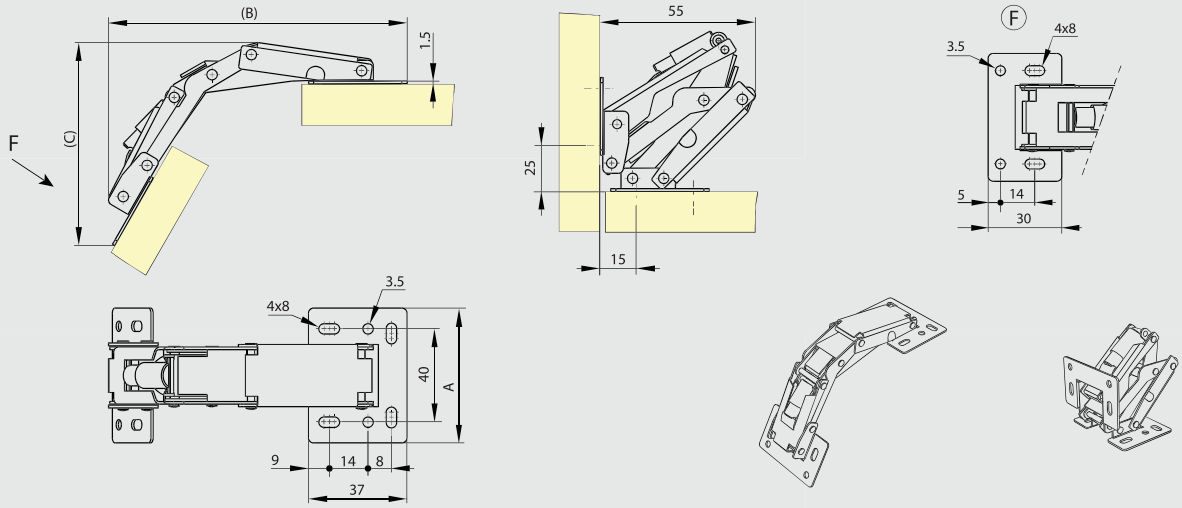

Concealed hinges with two cranked leaves - undrilled - 120° opening - version A

120° STAINLESS STEEL RoHS

Hinges for side door of baggage compartment (bus and coach, bodywork...)

Part number	Material	Finish	A	B	C	D	E	Weight (g)
39-1-3885	304 stainless steel	raw	300	44.1	1.5	3	12.5	440
39-1-3887	304 stainless steel	raw	600	44.1	1.5	3	12.5	880

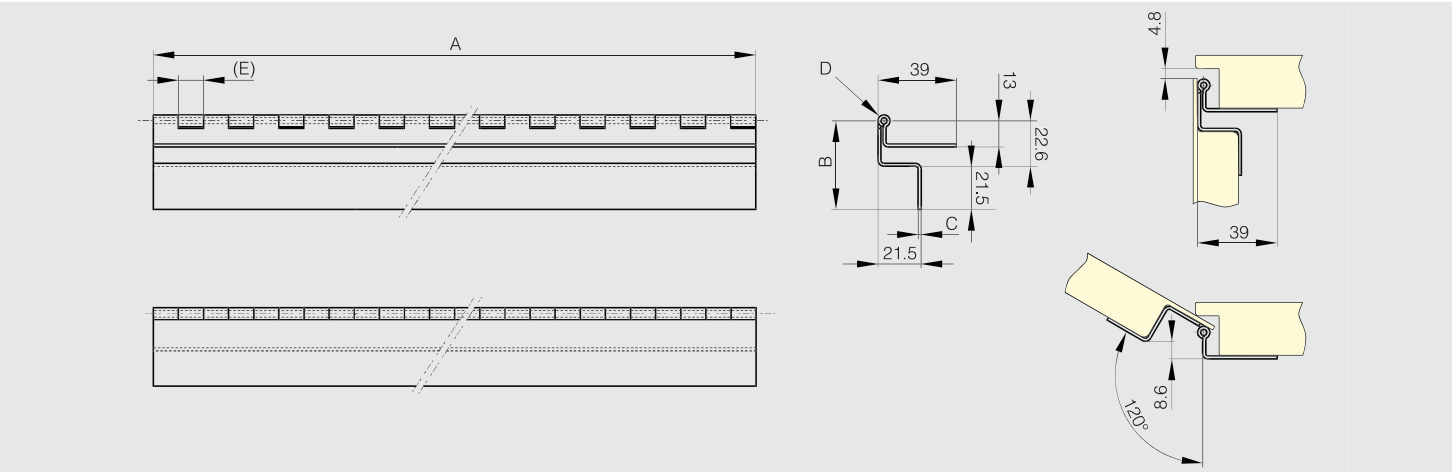

Concealed hinges with two cranked leaves - drilled - 120° opening - version A

120° STAINLESS STEEL RoHS

Hinges for side door of baggage compartment (bus and coach, bodywork...)
Use rivets for 4.2 diameter holes (door side).
Use self-drilling screws for 12.2 diameter holes (frame side).

Part number	Material	Finish	A	B	C	D	E	G	H	Weight (g)
39-1-3886	304 stainless steel	raw	300	44.1	1.5	3	12.5	160	70	430
39-1-3888	304 stainless steel	raw	600	44.1	1.5	3	12.5	160	60	870

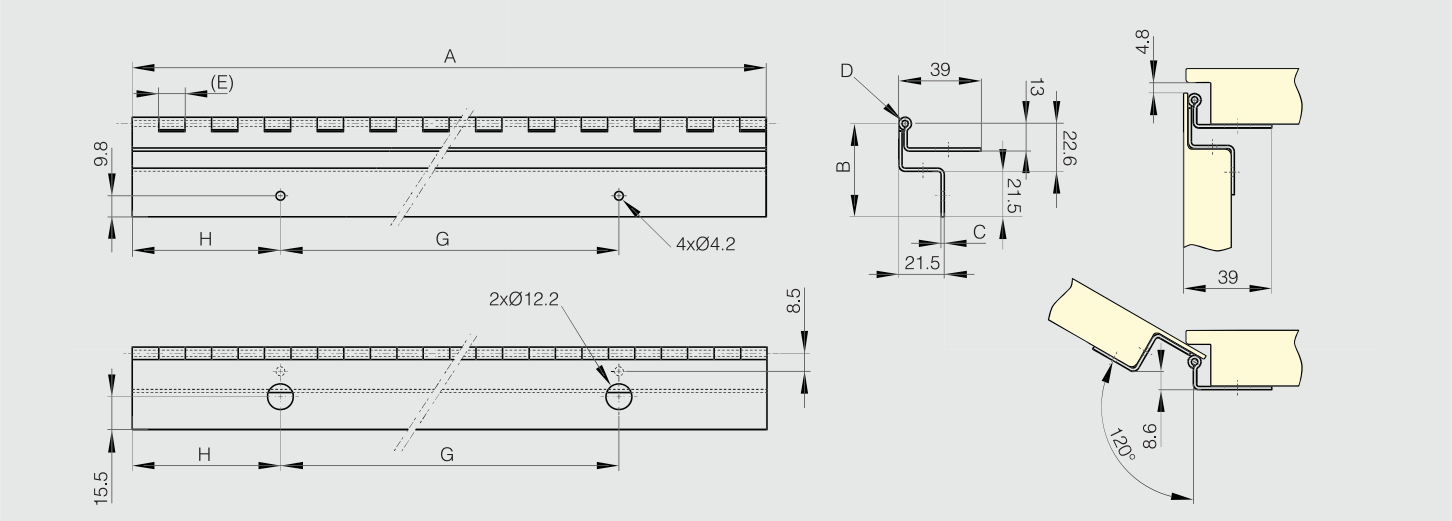

Concealed hinges with two cranked leaves - undrilled - 120° opening - version B

120° STAINLESS STEEL RoHS

Hinges for side door of baggage compartment (bus and coach, bodywork...)

Part number	Material	Finish	A	B	C	D	E	Weight (g)
39-1-3889	304 stainless steel	raw	300	54.1	1.5	3	12.5	430
39-1-3891	304 stainless steel	raw	600	54.1	1.5	3	12.5	870

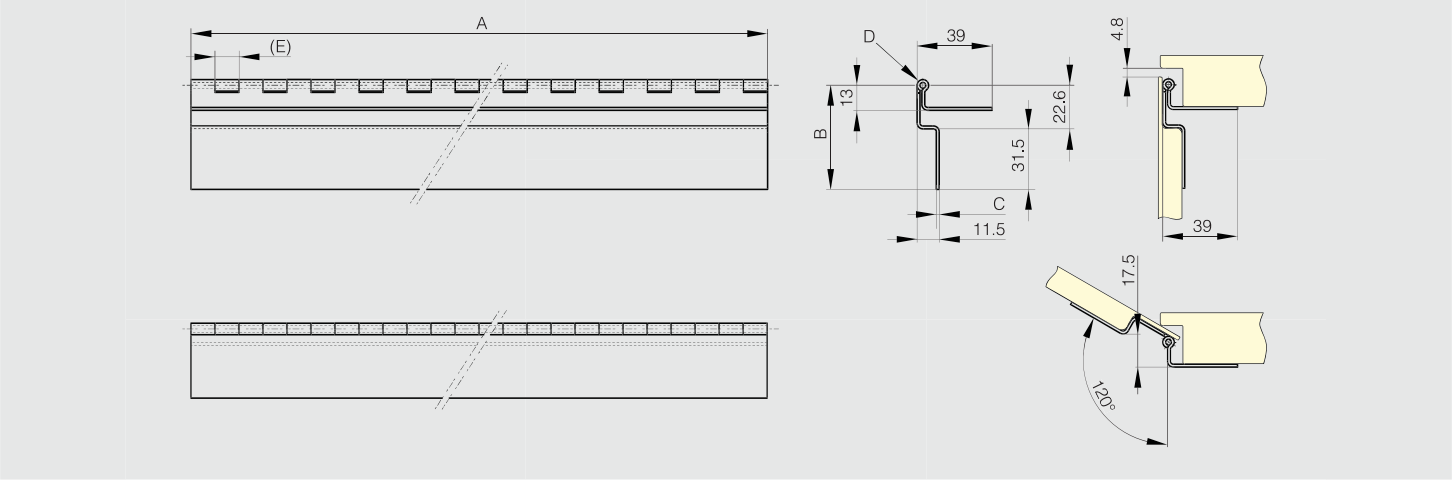

Concealed hinges with two cranked leaves - drilled - 120° opening - version B

120° STAINLESS STEEL RoHS

Hinges for side door of baggage compartment (bus and coach, bodywork...)
Use rivets for 4.2 diameter holes (door side).
Use self-drilling screws for 12.2 diameter holes (frame side).

Part number	Material	Finish	A	B	C	D	E	G	H	J	K	L	Weight (g)
39-1-3890	304 stainless steel	raw	300	54.1	1.5	3	12.5	160	30	80	70	160	430
39-1-3892	304 stainless steel	raw	600	54.1	1.5	3	12.5	260	40	130	60	160	870

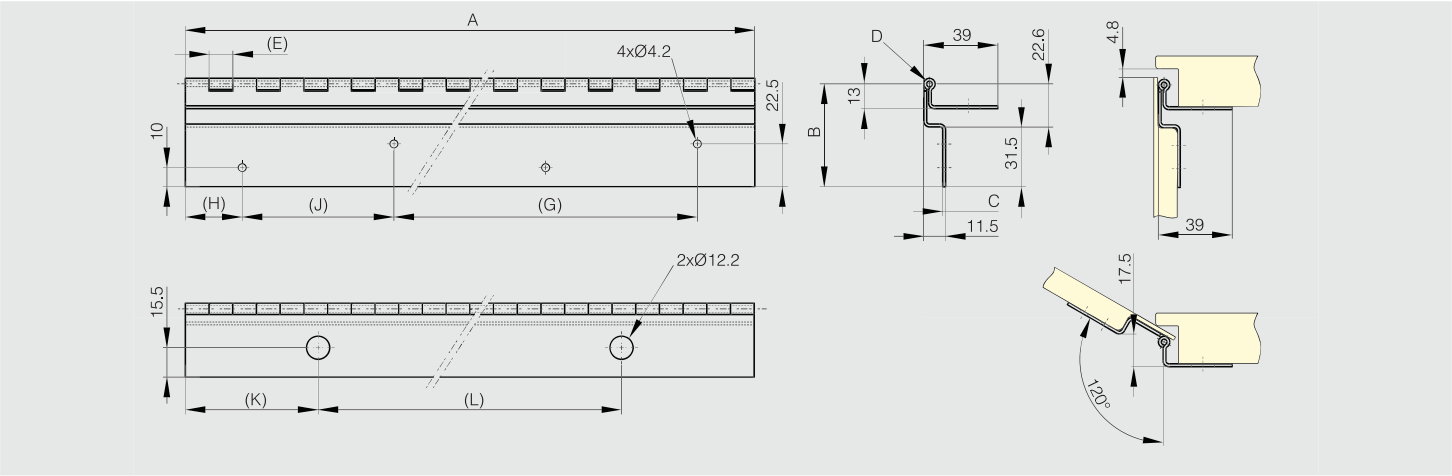

Long concealed spring hinges - 180 ° opening

NEW

180° STAINLESS STEEL RoHS

Patented concealed hinge 180° opening with double axis for sheet metal applications.
The springs make it possible to prioritize the 2 axis in order to have an adapted door movement.

Stainless steel pins and springs.

	Part number	Material	Finish	A	B	C	D	E	F	G	H	K	L	S	Weight (g)
NEW	42-1-4612	stainless steel 304	raw	500	90	3	6	30	71.4	60	49	68	10	6.6	3300

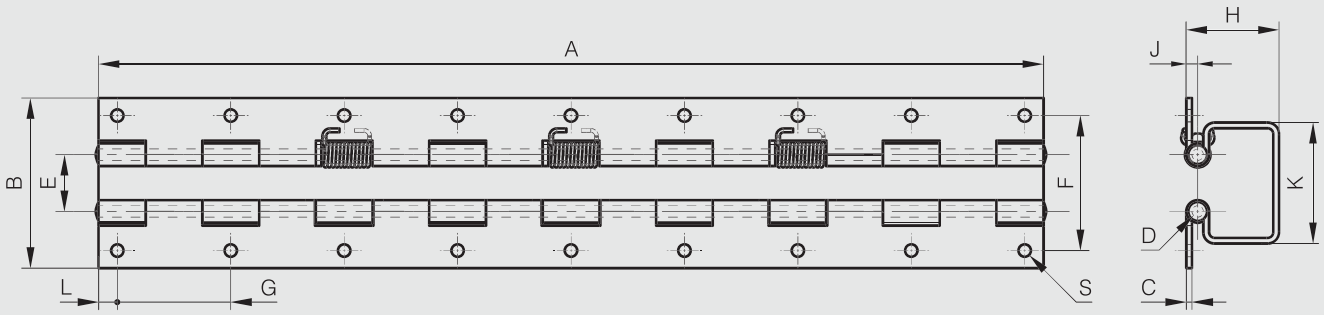

Stainless steel hinges with concealed spring 0.35 N.m

NEW

180° STAINLESS STEEL RoHS

Opening spring force:
M(0°): 0.35 N.m / M(90°): 0.24 N.m / M(180°): 0.12 N.m
Closing spring force:
M(0°): 0.12 N.m / M(90°): 0.24 N.m / M(180°): 0.35 N.m

Spring in Bezinal steel.
Washers in POM.

316 stainless steel version : please ask us.

	Part number	Material	Finish	A	B	C	D	Note	Weight (g)
NEW	72-1-4409	304 stainless steel	deburred	67	55	4.5	13	opening spring/ delivered flat	170
NEW	72-1-4410	304 stainless steel	deburred	67	55	4.5	13	closing spring	170

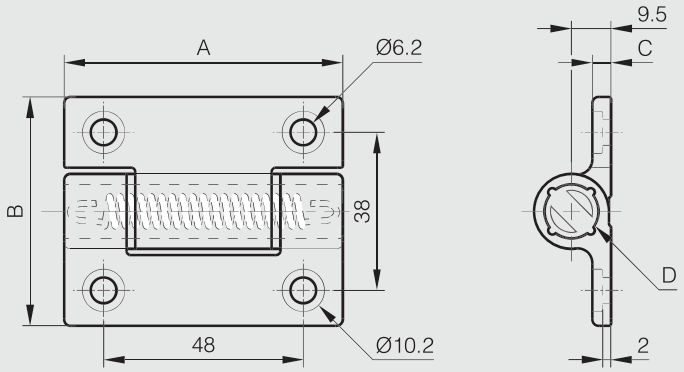

Stainless steel hinges with concealed spring 0.7 N.m

NEW

180° STAINLESS STEEL RoHS

Opening spring force:
M(0°): 0.7 N.m / M(90°): 0.45 N.m / M(180°): 0.23 N.m
Closing spring force:
M(0°): 0.23 N.m / M(90°): 0.45 N.m / M(180°): 0.7 N.m

Spring in Bezinal steel.
Washers in POM.

316 stainless steel version : please ask us.

	Part number	Material	Finish	A	B	C	D	Note	Weight (g)
NEW	72-1-4411	304 stainless steel	deburred	67	55	4.5	13	opening spring/ delivered flat	170
NEW	72-1-4412	304 stainless steel	deburred	67	55	4.5	13	closing spring	170

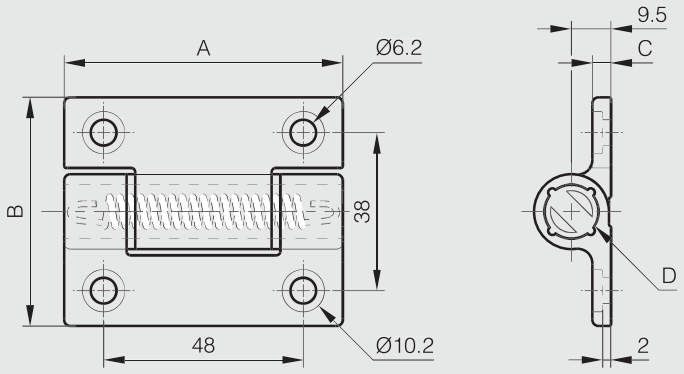

Stainless steel hinges with concealed spring 1.3 N.m

NEW

180° INOX RoHS

Opening spring force:
M(0°): 1.3 N.m / M(90°): 1.1 N.m / M(180°): 0.9 N.m
Closing spring force:
M(0°): 0.5 N.m / M(90°): 0.7 N.m / M(180°): 1 N.m

Spring in Bezinal steel.
Washers in POM.

316 stainless steel version : please ask us.

	Part number	Material	Finish	A	B	C	D	Note	Weight (g)
NEW	72-1-4413	304 stainless steel	deburred	67	55	4.5	13	opening spring/ delivered flat	170
NEW	72-1-4414	304 stainless steel	deburred	67	55	4.5	13	closing spring	170

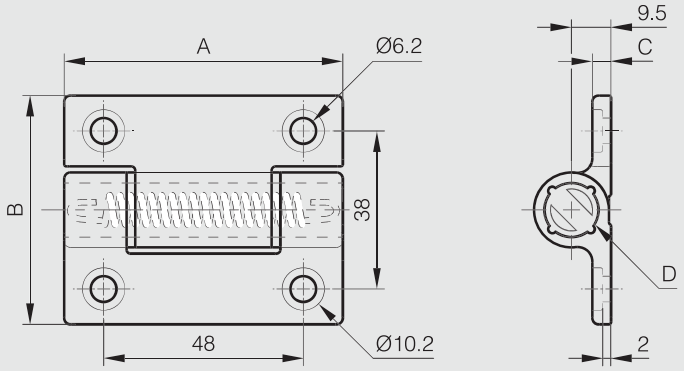

Compact spring hinges 1.6 N.m

NEW

270° STAINLESS STEEL RoHS

Opening spring force:
M(0°) : 1.6 N.m / M(90°) : 1.2 N.m / M(180°) : 0.84 N.m

Closing spring force:
M(0°) : 0.75 N.m / M(90°) : 1.2 N.m / M(180°) : 1.65 N.m

Spring: stainless steel

	Part number	Material	Finish	A	B	C	D	Note	Weight (g)
NEW	71-1-3912	304 stainless steel	raw	85	55	2	5	opening spring / delivered flat	107
NEW	71-1-3914	304 stainless steel	raw	85	55	2	5	closing spring / delivered flat	107

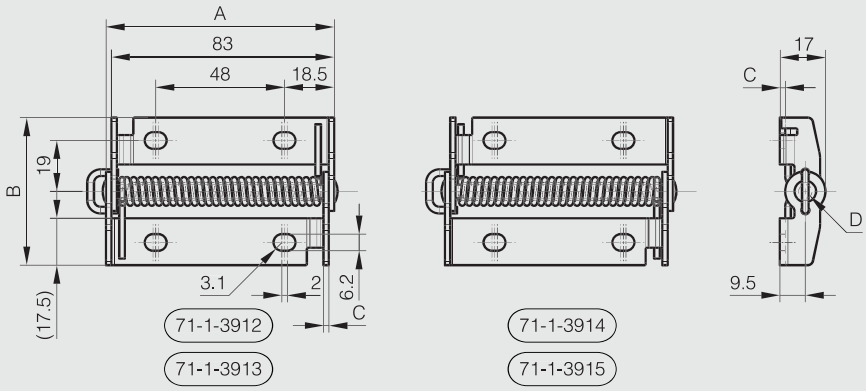

Compact spring hinges 2.2 N.m

NEW

270° STAINLESS STEEL RoHS

Opening spring force:
M(0°) : 2.2 N.m / M(90°) : 1.6 N.m / M(180°) : 1.1 N.m

Closing spring force:
M(0°) : 1.0 N.m / M(90°) : 1.6 N.m / M(180°) : 2.2 N.m

Spring: stainless steel

	Part number	Material	Finish	A	B	C	D	Note	Weight (g)
NEW	71-1-3913	304 stainless steel	raw	85	55	2	5	opening spring / delivered flat	107
NEW	71-1-3915	304 stainless steel	raw	85	55	2	5	closing spring / delivered flat	107

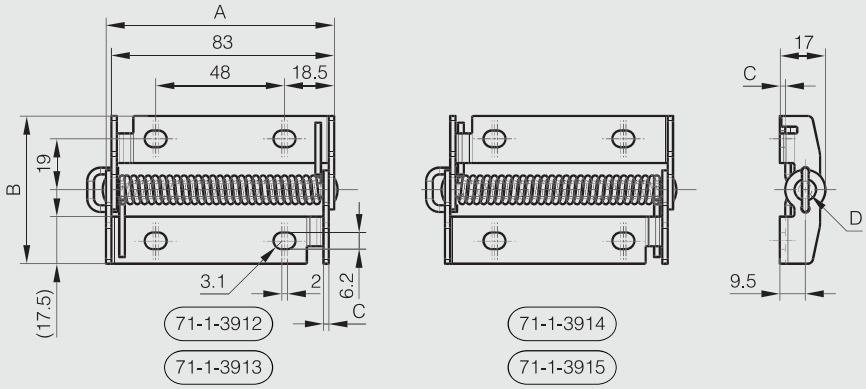

Opening spring hinges 120 mm long

NEW

270° STAINLESS STEEL RoHS

Opening spring force:
M(0°): 0.85 N.m / M(90°): 0.56 N.m / M(180°): 0.28 N.m

Stainless steel spring.

	Part number	Material	Finish	A	B	C	D	F	G	S	Note	Weight (g)
	71-1-3787	304 stainless steel	raw	120	40	1.5	4				undrilled	83
	71-1-3793	304 stainless steel	raw	120	40	1.5	4	22.7	60	4	drilled	83
NEW	71-1-3879	304 stainless steel	raw	120	40	1.5	4	22.7	60	4	with M5 studs	94

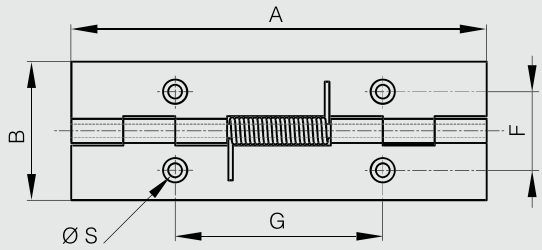

71-1-3793 & 71-1-3805 & 71-1-3861

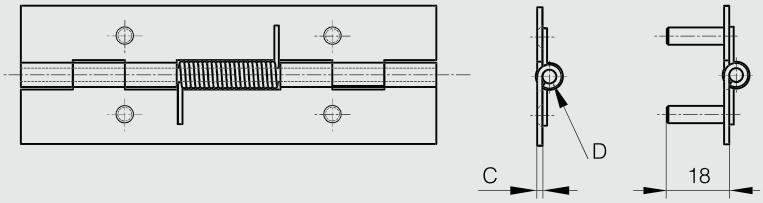

71-1-3879 & 71-1-3885 & 71-1-3887

Closing spring hinges 120 mm long

NEW

270° STAINLESS STEEL RoHS

Closing spring force:
M(0°): 0.28 N.m / M(90°): 0.56 N.m / M(180°): 0.85 N.m

Stainless steel spring.

	Part number	Material	Finish	A	B	C	D	F	G	S	Note	Weight (g)
	71-1-3790	304 stainless steel	raw	120	40	1.5	4				undrilled	83
	71-1-3796	304 stainless steel	raw	120	40	1.5	4	22.7	60	4	drilled	83
NEW	71-1-3880	304 stainless steel	raw	120	40	1.5	4	22.7	60	4	with M5 studs	94

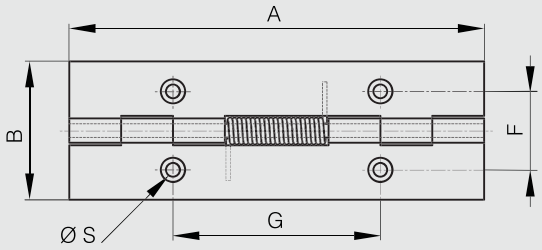

71-1-3796 & 71-1-3808 & 71-1-3863

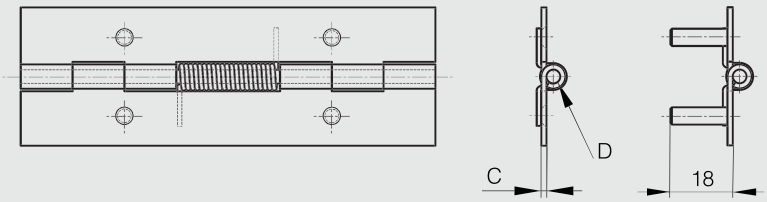

71-1-3880 & 71-1-3886 & 71-1-3888

Opening spring hinges 180 mm long

NEW

270° STAINLESS STEEL RoHS

Opening spring force:
M(0°): 1.7 N.m / M(90°): 1.1 N.m / M(180°): 0.56 N.m

Stainless steel spring.

	Part number	Material	Finish	A	B	C	D	F	G	S	Note	Weight (g)
	71-1-3788	304 stainless steel	raw	180	40	1.5	4				undrilled	124
	71-1-3794	304 stainless steel	raw	180	40	1.5	4	22.7	60	4	drilled	124
NS	71-1-3881	304 stainless steel	raw	180	40	1.5	4	22.7	60	4	with M5 studs	142

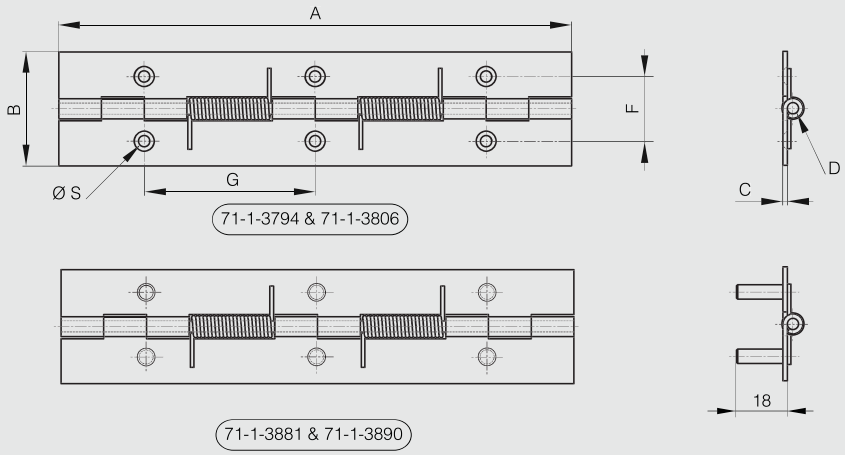

Closing spring hinges 180 mm long

NEW

270° STAINLESS STEEL RoHS

Closing spring force:
M(0°): 0.56 N.m / M(90°): 1.1 N.m / M(180°): 1.7 N.m

Stainless steel spring.

	Part number	Material	Finish	A	B	C	D	F	G	S	Note	Weight (g)
	71-1-3791	304 stainless steel	raw	180	40	1.5	4				undrilled	124
	71-1-3797	304 stainless steel	raw	180	40	1.5	4	22.7	60	4	drilled	124
NS	71-1-3889	304 stainless steel	raw	180	40	1.5	4	22.7	60	4	with M5 studs	142

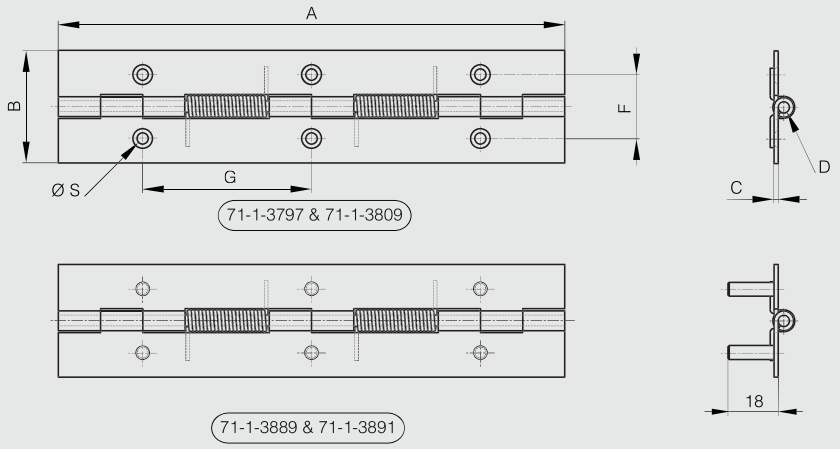

Opening spring hinges 240 mm long

NEW

270° STAINLESS STEEL RoHS

Opening spring force:
M(0°): 2.55 N.m / M(90°): 1.68 N.m / M(180°): 0.84 N.m

Stainless steel spring.

	Part number	Material	Finish	A	B	C	D	F	G	S	Note	Weight (g)
	71-1-3789	304 stainless steel	raw	240	40	1.5	4				undrilled	165
	71-1-3795	304 stainless steel	raw	240	40	1.5	4	22.7	60	4	drilled	164
NS	71-1-3882	304 stainless steel	raw	240	40	1.5	4	22.7	60	4	with M5 studs	187

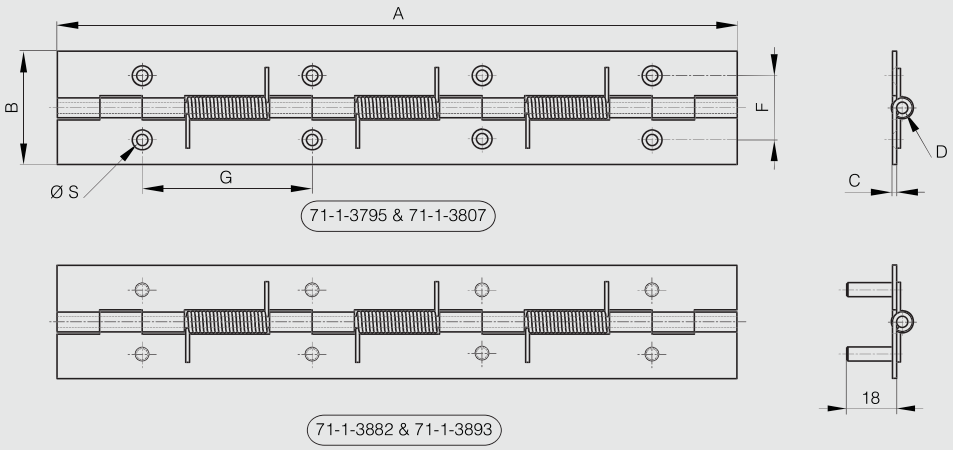

Closing spring hinges 240 mm long

NEW

270° STAINLESS STEEL RoHS

Closing spring force:
M(0°): 0.84 N.m / M(90°): 1.68 N.m / M(180°): 2.55 N.m

Stainless steel spring.

	Part number	Material	Finish	A	B	C	D	F	G	S	Note	Weight (g)
	71-1-3792	304 stainless steel	raw	240	40	1.5	4				undrilled	165
	71-1-3798	304 stainless steel	raw	240	40	1.5	4	22.7	60	4	drilled	164
NS	71-1-3792	304 stainless steel	raw	240	40	1.5	4	22.7	60	4	with M5 studs	187

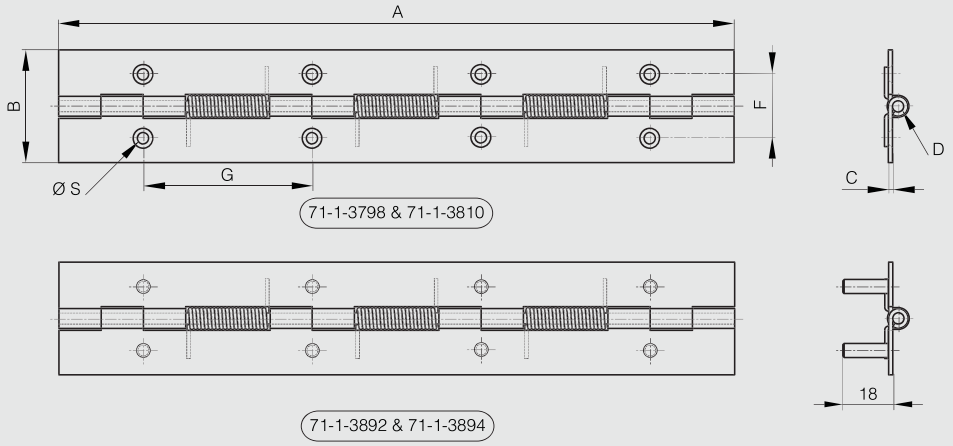

Spring hinges 50 mm long

Opening spring force:
M(0°): 1.5 N.m / M(90°): 1.1 N.m / M(180°): 0.65 N.m

Closing spring force:
M(0°): 0.25 N.m / M(90°): 0.65 N.m / M(180°): 1.1 N.m

Part number	Material	Finish	A	B	C	D	F	G	S	Note	Weight (g)
71-1-3553	304 stainless steel	raw	50	50	2	4	10	30	5	stainless steel opening spring	50
71-1-3586	304 stainless steel	raw	50	50	2	4	10	30	5	stainless steel closing spring	50

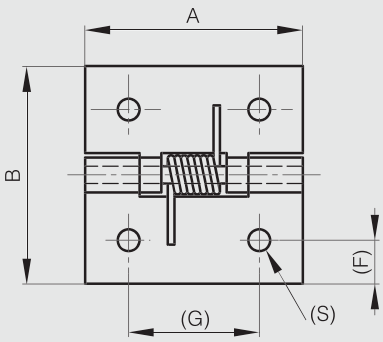

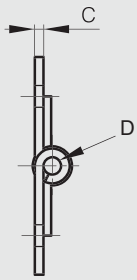

Spring hinge 60 mm long - with 4 holes

Opening spring force:
M(0°): 0.11 N.m / M(90°): 0.09 N.m / M(180°): 0.07 N.m

Part number	Material	Finish	A	B	C	D	F	G	S1	S2	Note	Weight (g)
71-1-3560	430 stainless steel	raw	60	35	1	3	7.5	35	3.1	5	stainless steel opening spring	22

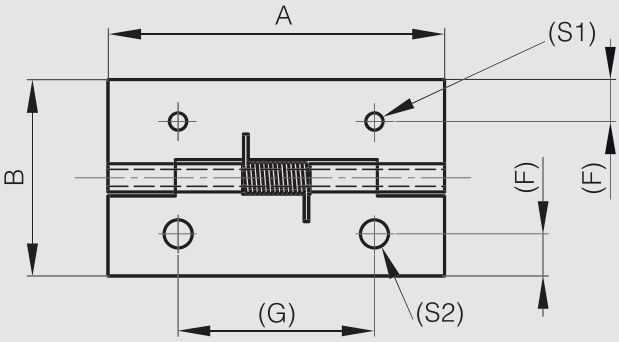

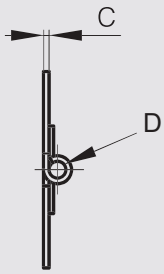

Spring hinges 75 mm long - drilled

Opening spring force:
M(0°): 0.12 N.m / M(90°): 0.09 N.m / M(180°): 0.06 N.m

Part number	Material	Finish	A	B	C	D	F	G	S	Note	Weight (g)
71-1-3582	304 stainless steel	raw	75	20	0.8	2	11.2	60	2.8	stainless steel opening spring	12

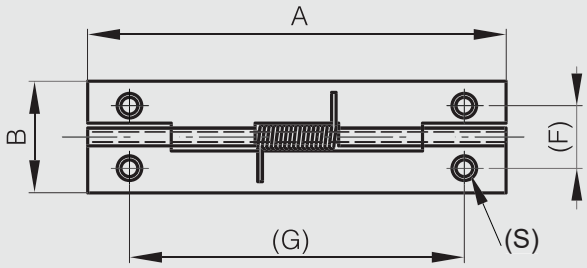

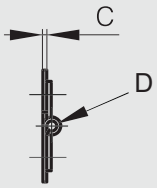

Spring hinges 75 mm long - undrilled

Opening spring force:
M(0°): 0.12 N.m / M(90°): 0.095 N.m / M(180°): 0.07 N.m

Part number	Material	Finish	A	B	C	D	Note	Weight (g)
71-1-3583	304 stainless steel	raw	75	30	0.8	2	stainless steel opening spring	19

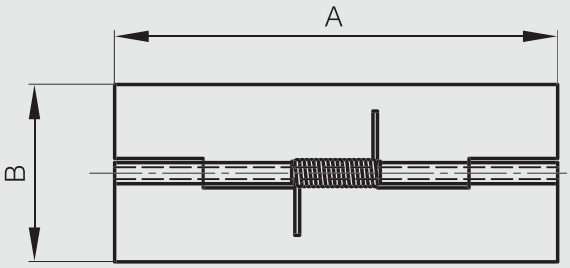

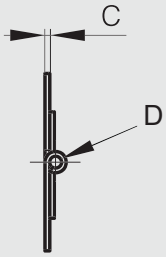

Spring hinges 80 mm long

Opening spring force:
M(0°): 0.17 N.m / M(90°): 0.12 N.m / M(180°): 0.065 N.m

Part number	Material	Finish	A	B	C	D	F	G	S	Note	Weight (g)
71-1-3578	304 stainless steel	raw	80	23.5	1	3	4.5	60	4	stainless steel opening spring	25
71-1-3304	430 stainless steel	raw	80	23.5	1	3	4.5	60	4	stainless steel opening spring	25

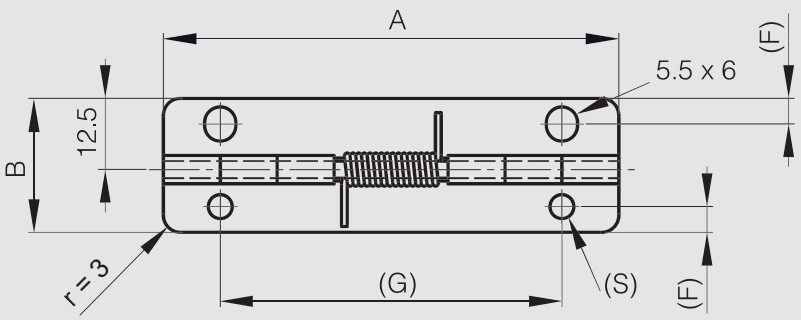

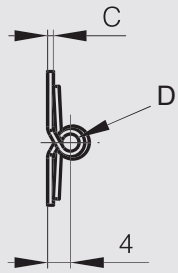

Spring hinges 160 mm long

Opening spring force for part numbers 71-1-3580 and 71-1-3581:
M(0°): 0.9 N.m / M(90°): 0.86 N.m / M(180°): 0.6 N.m

Closing spring force for part numbers 71-1-3618 and 71-1-3835:
M(0°): 0.12 N.m / M(90°): 0.44 N.m / M(180°): 0.55 N.m

Punched pin.

Part number	Material	Finish	A	B	C	D	F	G	S	Note	Weight (g)
71-1-3581	304 stainless steel	raw	160	46	3	6.5	30	70	4.2	stainless steel opening spring	208
71-1-3835	304 stainless steel	raw	160	46	3	6.5	30	70	4.2	stainless steel closing spring	208

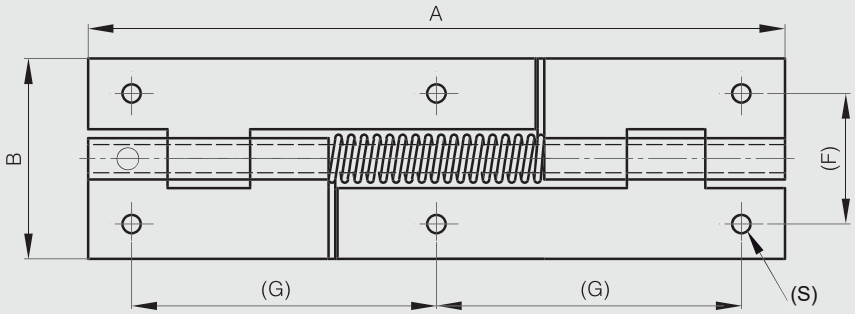

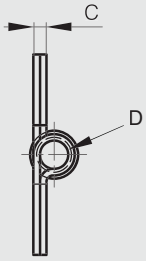

Spring hinges 170 mm long

Opening spring force:
M(0°): 0.24 N.m / M(90°): 0.19 N.m / M(180°): 0.14 N.m

Part number	Material	Finish	A	B	C	D	Note	Weight (g)
71-1-3522	304 stainless steel	raw	170	30	0.8	2	stainless steel opening spring	42

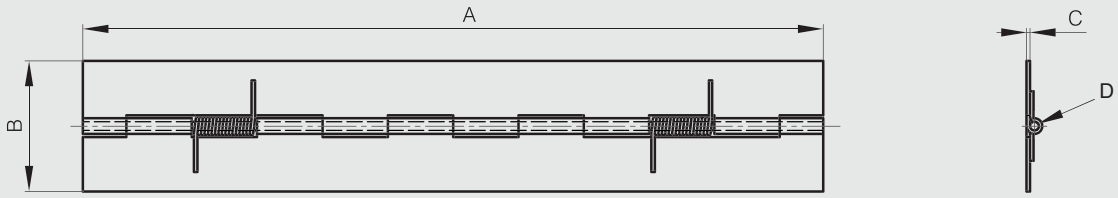

Cranked spring hinge 66 mm long

Spring force:
M (0 °): 0.07 N.m / M (90°): 0.22 N.m / M (180°): 0.38 N.m

Part number	Material	Finish	A	B	C	D	Note	Weight (g)
71-1-3649	316 stainless steel	brightened	66	22.5	1.5	4	closing spring	39

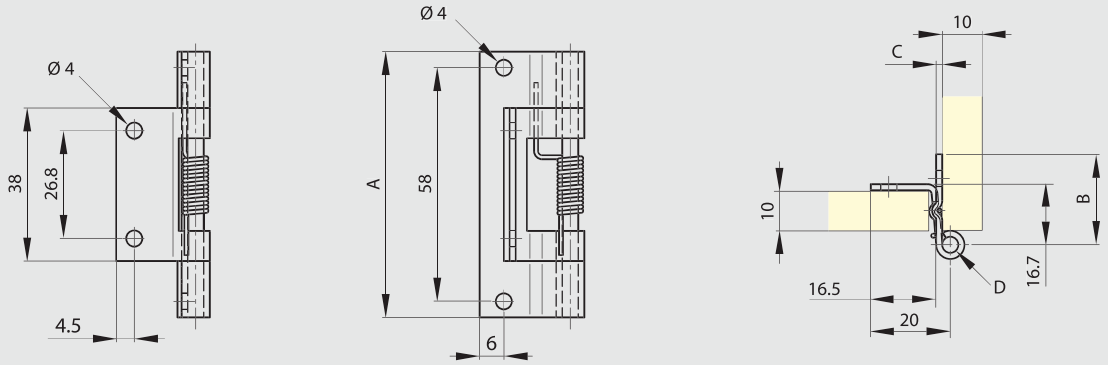

Cranked spring hinge 60 mm long

Spring force:
M (0 °): 0.03 N.m / M (90°): 0.16 N.m / M (180°): 0.32 N.m

Part number	Material	Finish	A	B	C	D	Note	Weight (g)
71-1-3622	316 stainless steel	raw	60	30	1.5	3	closing spring	40

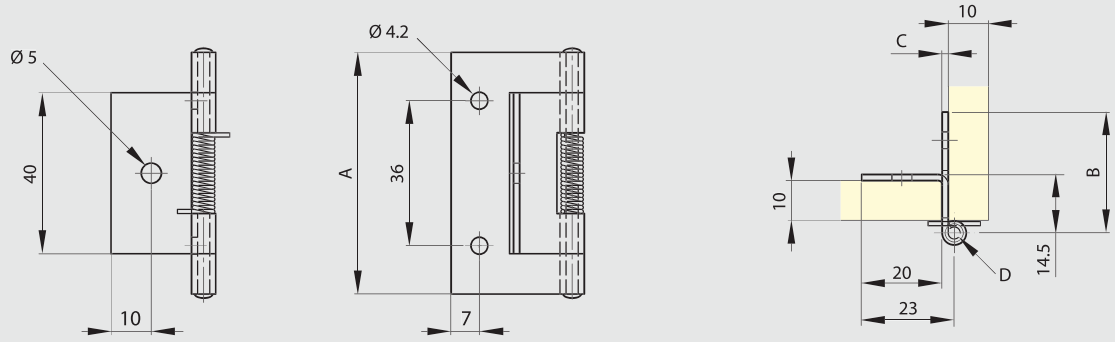

Lift-off rising hinge in stainless steel

Ramp integrated in the pin allows automatic closing by gravity.

Part number	Material	Finish	A	B	C	D	Note	Weight (g)
14-1-3886	304 stainless steel	brushed	80	80	3	8	type 2	216
14-1-3892	304 stainless steel	brushed	80	80	3	8	type 1	216

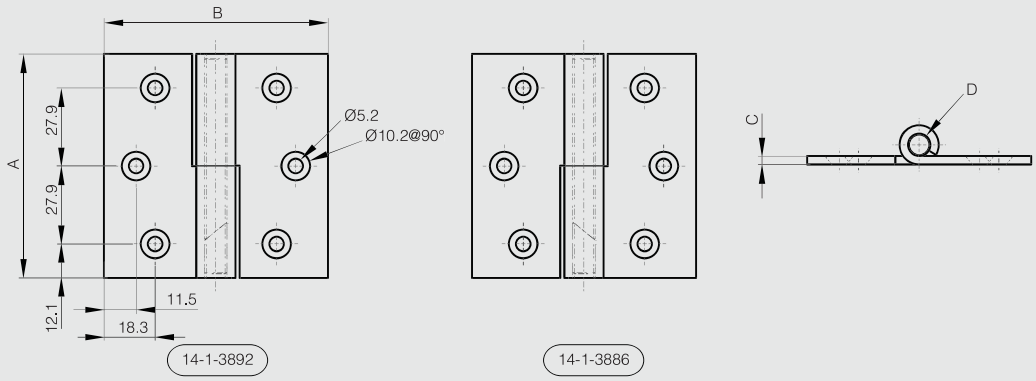

Spring-assist torque hinge

NEW

100° STAINLESS STEEL RoHS

The built-in spring makes lids feel lighter to open (the hinge is for top-opening lids).
The retaining torque is adjustable with a hex key (0 to 3.5 N.m).
Cycling resistance: 50,000 cycles.
Operating temperature: 0°/+40°C.

The hinge is delivered with a pin attached. It keeps the hinge open.
Please do not detach until the hinge is installed.

Optional cover is sold separately (22-7-3556).

	Part number	Material	Finish	A	B	Spring torque	Weight (g)
NEW	71-7-3910	304 stainless steel	polished	70	66	2.2 - 2.9 N.m	218
NEW	71-7-3911	304 stainless steel	polished	70	66	3.5 - 4.4 N.m	222

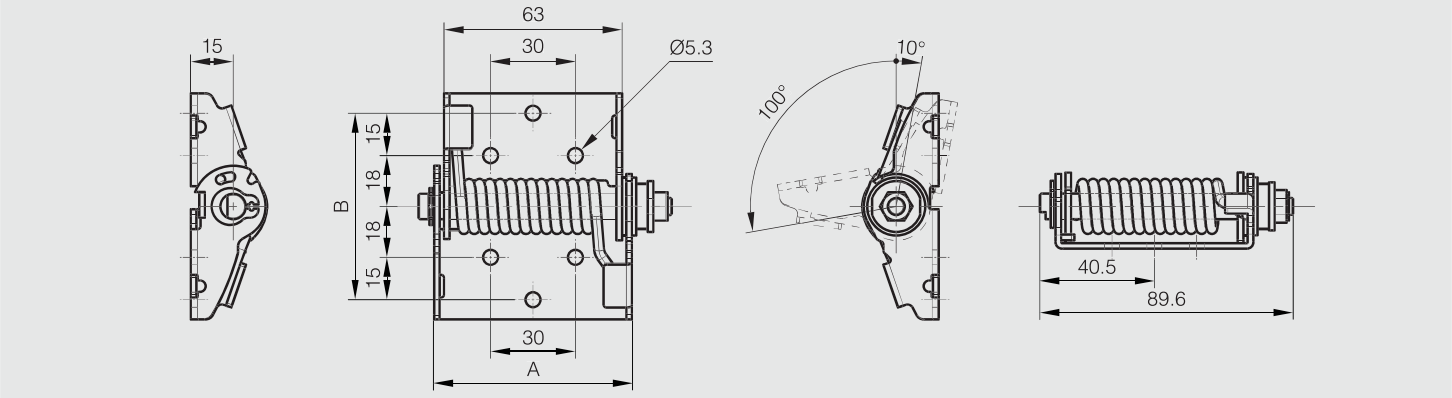

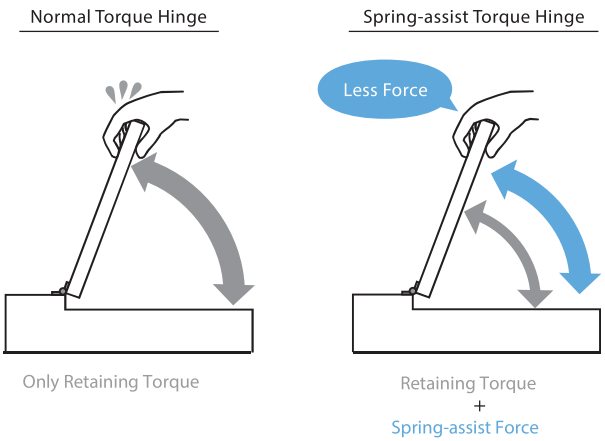

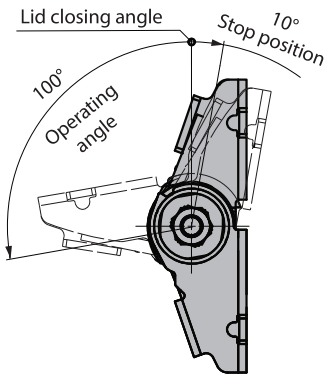

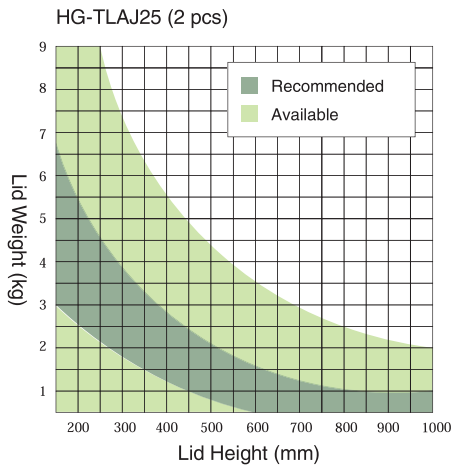

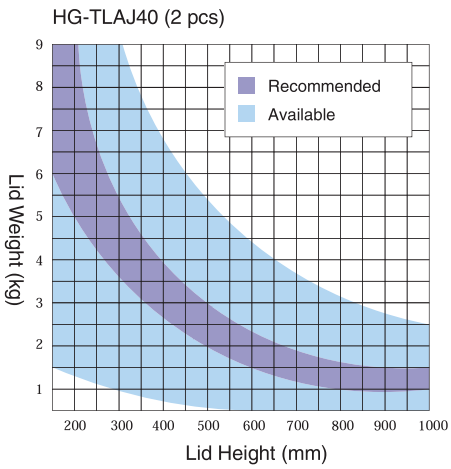

Available Range
- Free-stop: 0° to 100°

Recommended Range
- Free-stop: 0° to 100°
- Moves very llightly: 1° to 99°

* Spring-assisted lid moment is close to 0 N.m.

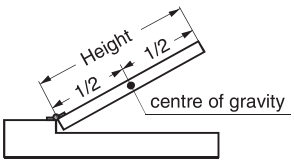

Calculation Condition:
The centre of gravity is at the centre of the lid.

Balance-adjustable lift-assist hinge

NEW

100° STAINLESS STEEL RoHS

Easy to lift heavy top-opening lids due to spring tension (lift-assist).
A built-in damper prevent lids from slamming shut (soft-close).
Adjustable torque by turning a screw (+/-10%).
Designed for horizontal applications with top-opening / upward-opening lids and doors.
Included : a plastic cover for clean appearance.

	Part number	Material	Finish	A	B	C	Torque	Weight (g)
NEW	75-7-0012	340 stainless steel	light grey	180	276	52.7	15 N.m	3400

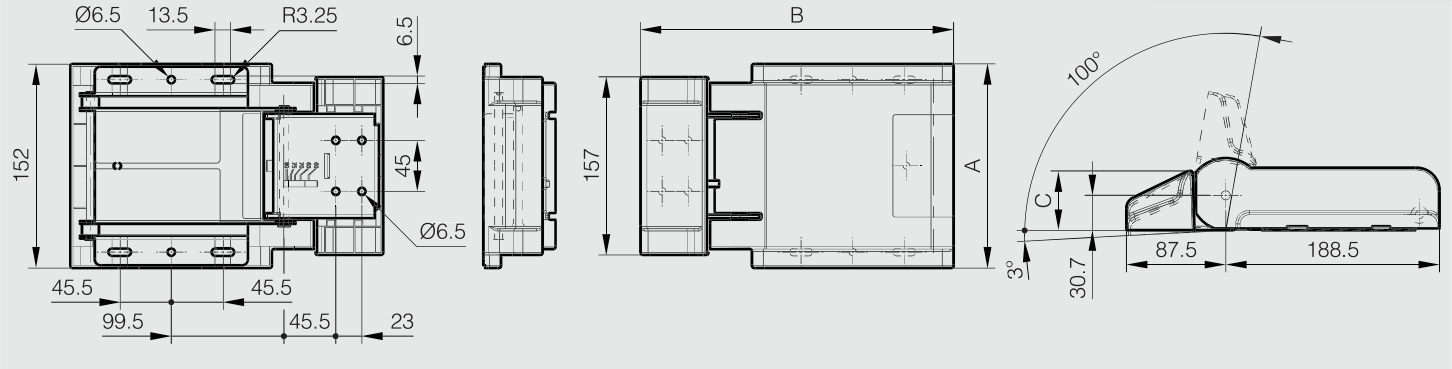

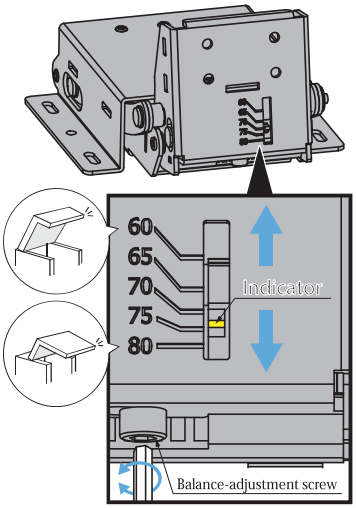

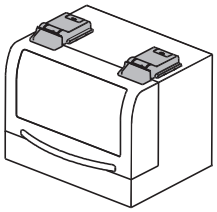

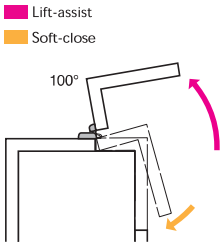

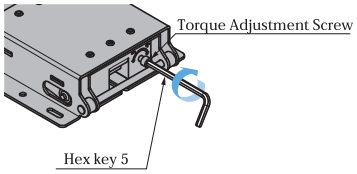

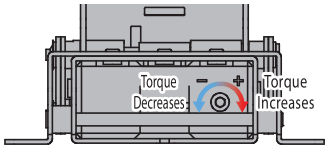

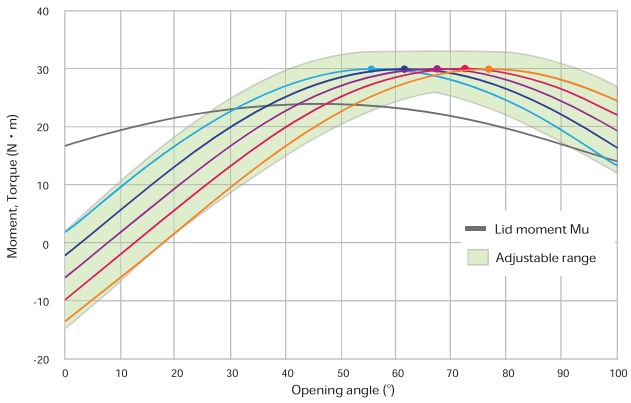

[Indicator's Scale]
60 65 70 (default) 75 80 ● Angle of peak torque

Lid moment Mu > Hinge torque・・・Force is applied in the closing direction of lid.
Lid moment Mu < Hinge torque・・・Force is applied in the opening direction of lid.
Lid specs (example) : X=170mm Y=175mm L=244mm m=8.6kg
(Setting the indicator to 60 is the right adjustment in this case.)

Calculation formula $Mu = m \times L \times \cos\theta$

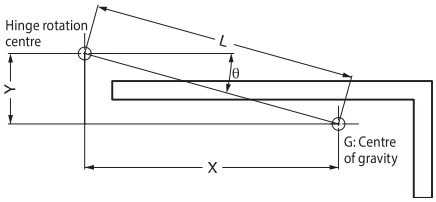

Soft-close dampening hinge in stainless steel

115° STAINLESS STEEL RoHS

- Soft-close dampening hinge: soft-close damper keeps lid from slamming shut when the hinge is put in the closed position.
- Damper working direction: shown by the arrow in the drawing.
- Operating angle: 115°.
- Do not force the door to close faster in damper effective direction. It can cause damage to the product.
- When the door opening angle is small, the dampers may not work smoothly.
- Torque moment (for one hinge): 2.2 to 3.0 N.m.
- Torque calculation:

Torque (N.m) = L (m) x 1/2 x W (kg) x 9.8 with:

• L = door height in metre.
• W = door weight in kilo.

- Operating temperature: 0 to + 40°C.
- Soft close of a door (vertical application): door closing system.

Please ask us for more information.

Part number	Material	Finish	A	B	C	D	Torque	Note	Weight (g)
75-1-0003	304 stainless steel	raw	80	40	3	16	2.2 - 3.0 N.m	Damper working direction when closing the hinge	300

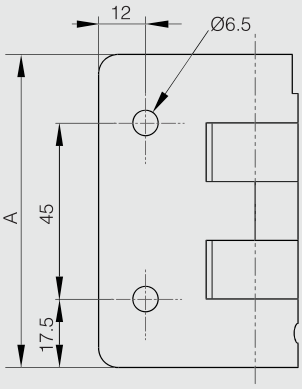

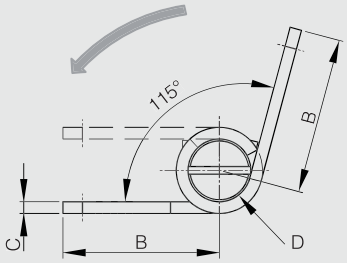

Hinges with or without friction in stainless steel - friction torque 3 N.m

NEW

180° STAINLESS STEEL RoHS

Constant torque. Stable at various temperatures. (from -40°C to +80°C)
Pin in stainless steel.
Plugs in polyethylene.

	Part number	Material	Finish	A	B	C	D	Torque	Pin material	Note	Weight (g)
NEW	62-1-3719	301 stainless steel	raw	85	55	2	8	3 N.m	stainless steel	with friction	121
	62-1-3711	304 stainless steel	raw	85	55	2	8		304 stainless steel	no torque	122

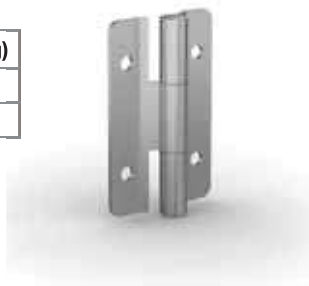

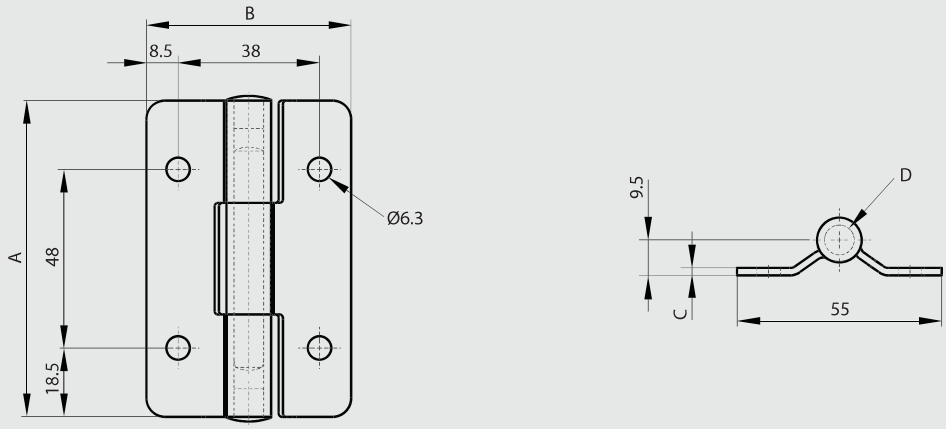

Hinges with or without friction in stainless steel - friction torque 4.5 N.m

NEW

180° STAINLESS STEEL RoHS

Constant torque. Stable at various temperature (from -40°C to +80°C)
Pin in stainless steel.
Plugs in polyethylene.

	Part number	Material	Finish	A	B	C	D	Torque	Pin material	Note	Weight (g)
NEW	62-1-3747	301 stainless steel	raw	115	55	2	8	4.5 N.m	stainless steel	with friction	170
NEW	62-1-3748	304 stainless steel	raw	115	55	2	8		304 stainless steel	no torque	170

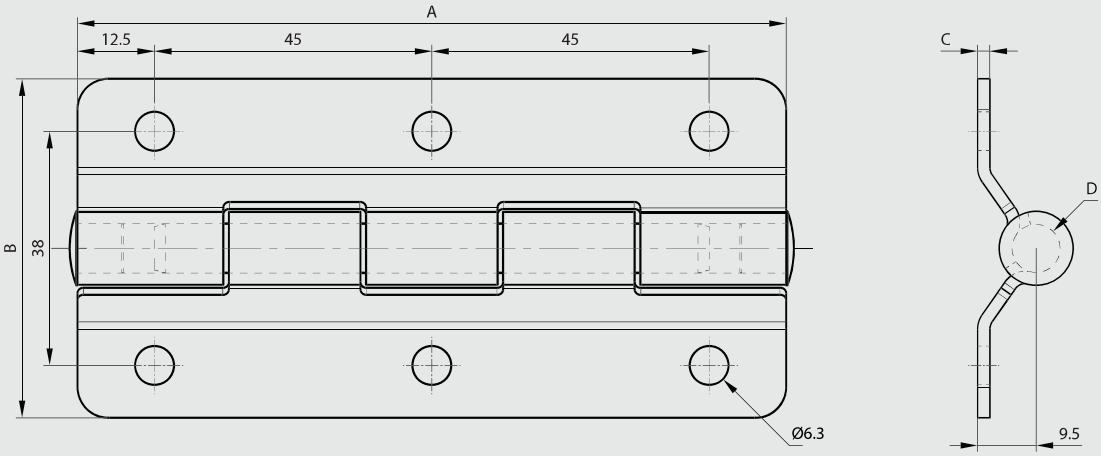

Hinges with or without friction in stainless steel - friction torque 5 N.m

NEW

180° STAINLESS STEEL RoHS

Constant torque. Stable at various temperatures (from -40° to 80°C).
Pin in stainless steel.
Plugs in polyethylene.

	Part number	Material	Finish	A	B	C	D	Torque	Pin material	Note	Weight (g)
NEW	62-1-3720	301 stainless steel	raw	85	55	2	12	5 N.m	stainless steel	with friction	155
	62-1-3713	304 stainless steel	raw	85	55	2	12		304 stainless steel	no torque	161

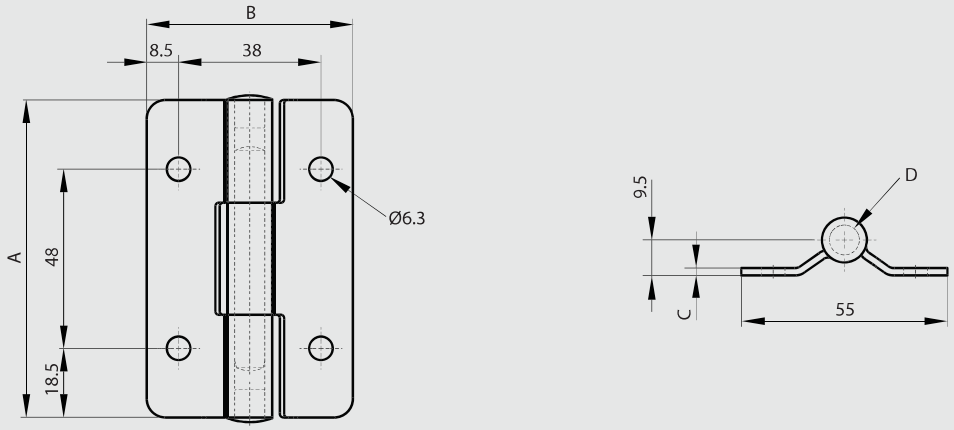

Hinges with or without friction in stainless steel - friction torque 8 N.m

NEW

180° STAINLESS STEEL RoHS

Constant torque. Stable at various temperatures (from -40°C to +80°C).
Pin in stainless steel.
Plugs in polyethylene.

	Part number	Material	Finish	A	B	C	D	Torque	Pin material	Note	Weight (g)
NEW	62-1-3732	301 stainless steel	raw	85	65	3	12	8 N.m	stainless steel	with friction	230
NEW	62-1-3733	304 stainless steel	raw	85	65	3	12		304 stainless steel	no torque	230

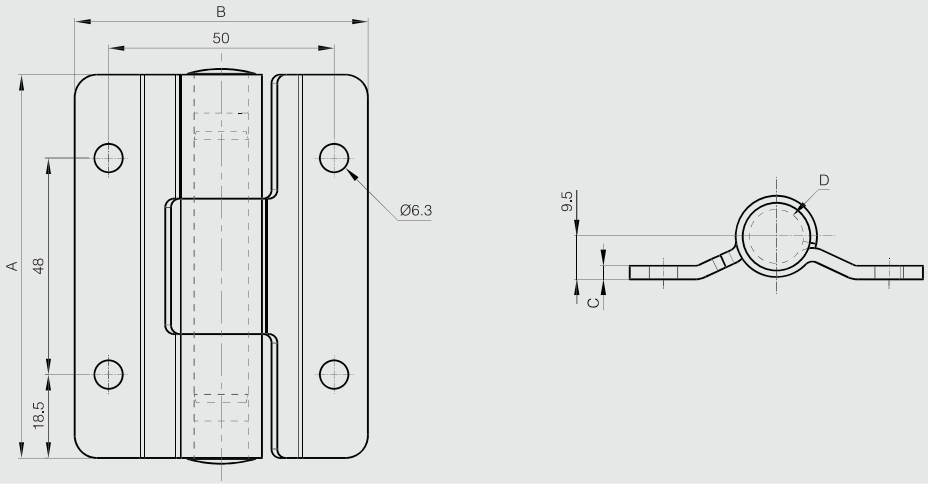

Stainless steel torque hinge 2 N.m

A combination of plastic and metal is used for friction to prevent metallic dust.
For vertical and horizontal applications.
Cycle life: 20,000 cycles.
Operating temperature: -10°C / +40°C
Torque 2 N.m+/-25%
Produced mainly in stainless steel, for a complete description of the materials contact us.

	Part number	Material	Finish	A	B	C	Torque	Weight (g)
NEW	52-7-4136	stainless steel 304	polished	50	50	12	2 N.m	60

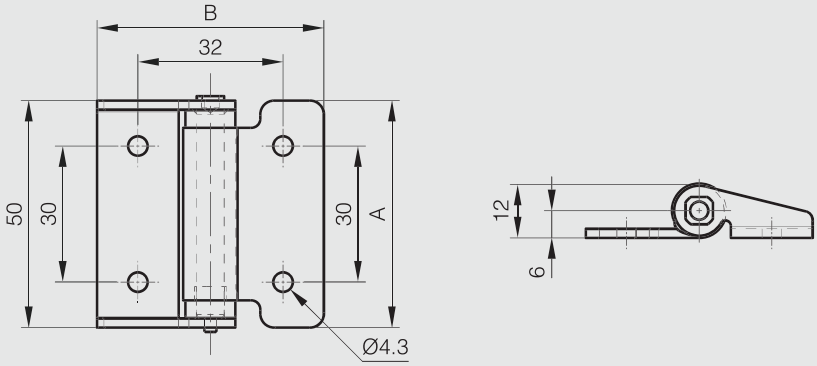

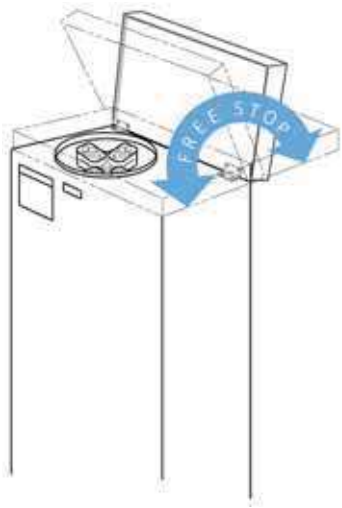

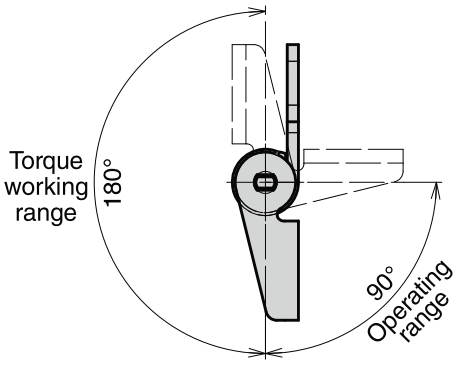

Lift-off torque hinges

NEW

180° STAINLESS STEEL RoHS

For vertical or horizontal applications.
Cycle life: 30,000 cycles.
14-7-3907 and 14-7-3906: torque 0.3 N.m +/- 67%
14-7-3904 and 14-7-3905: torque 1.6 N.m +/- 20%
Produced mainly in stainless steel, for a complete description of the materials contact us.

	Part number	Material	Finish	A	B	C	D	E	F	G	S	Torque	Note	Weight (g)
NEW	14-7-3906	304 stainless steel	polished	50	35	2	10	25	5	30	4.5	0.3 N.m	Type 1	42
NEW	14-7-3907	304 stainless steel	polished	50	35	2	10	25	5	30	4.5	0.3 N.m	Type 2	42
NEW	14-7-3904	304 stainless steel	polished	75	50	2	12	32	6	50	4.5	1.6 N.m	Type 1	96
NEW	14-7-3905	304 stainless steel	polished	75	50	2	12	32	6	50	4.5	1.6 N.m	Type 2	96

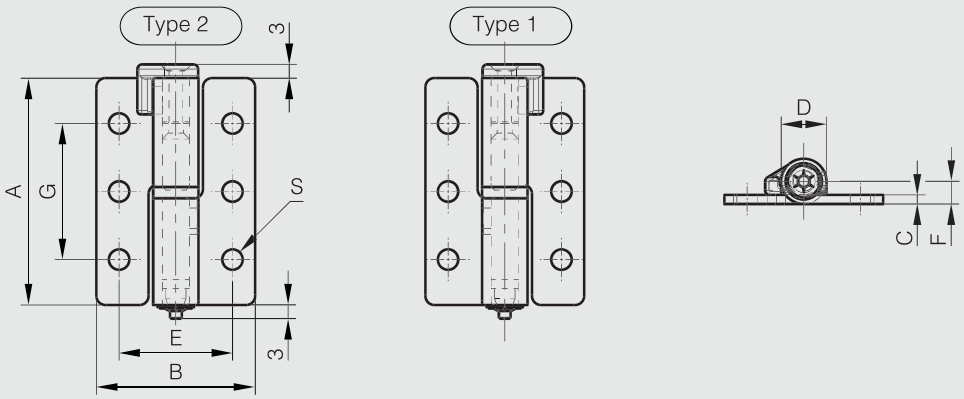

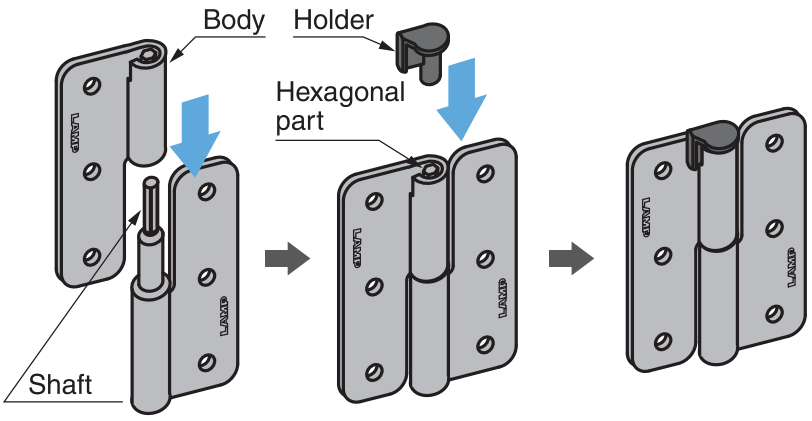

Insert the body into shaft, and then insert the holder into the hexagonal part of shaft to generate torque.
To detach, use a tool to push the holder out.

Dual axis torque hinge - 30 x 60 mm

- Dual axis: free stop at any angle in tilt & swivel.
- Provide torque stability in both directions.
- Torque per piece (tilting): 2.9 N.m.
- Torque per piece (swiveling): 1.4 N.m.
- Suitable for monitor screens.
- Rotation upon axis X can occur from 0 ° to 180 °.
- Rotation upon axis Z can occur up to 360 °.

Produced mainly in stainless steel, for a complete description of the materials contact us.

Part number	Material	Finish	A	B	C	Torque	Weight (g)
70-7-3622	430 stainless steel	polished	30	60	51.5	2.9 N.m (axis X) 1.4 N.m (axis Z)	92

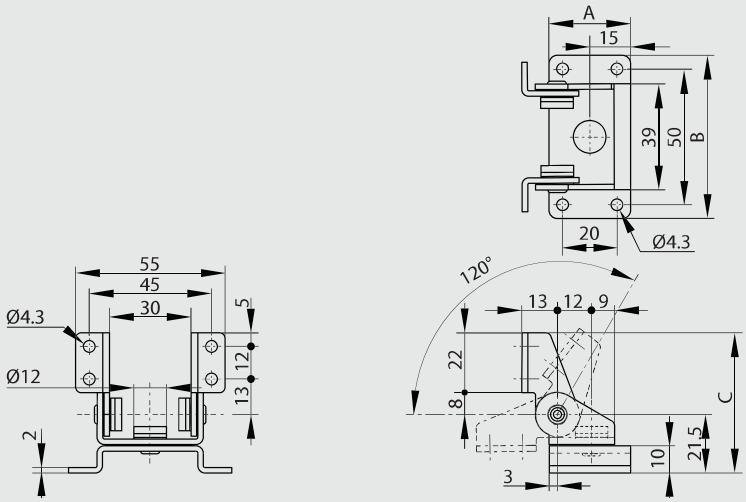

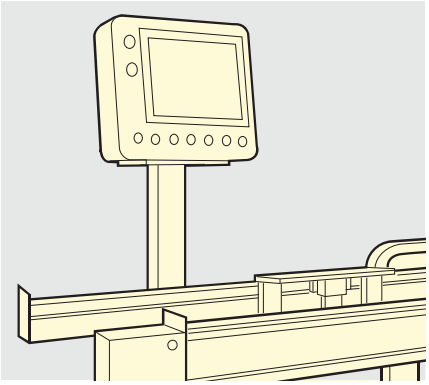

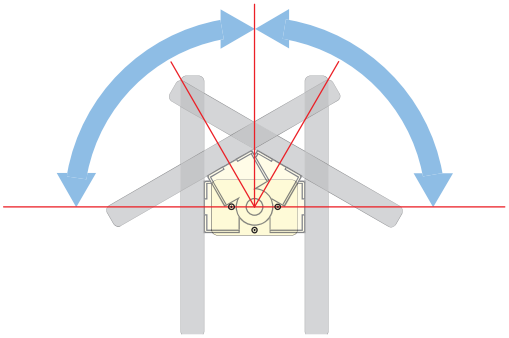

Swivel

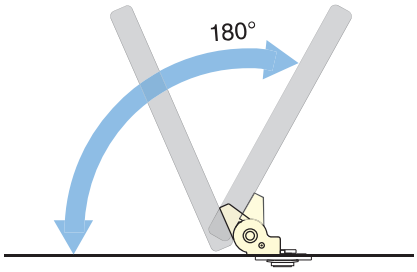

Tilt

Dual axis torque hinge - 50 x 76 mm

- Dual axis: free stop at any angle in tilt & swivel.
- Provide torque stability in both directions.
- Torque per piece (tilting): 7 N.m.
- Torque per piece (swiveling) 3 N.m.
- Suitable for monitor screens.
- Rotation upon axis X is free but can be blocked from 0° to 120° with a dditional pin.
-Rotation upon axis Z is free but can be blocked at 30° or 90° with additional pins (various holes in the fixing plate).
-Electric cables can go through a hole in the middle of the flixing plate.

Produced mainly in stainless steel, for a complete description of the materials contact us.

Part number	Material	Finish	A	B	Torque	Weight (g)
70-7-3621	430 stainless steel	polished	50	76	7 N.m (axis X) 3 N.m (axis Z)	232

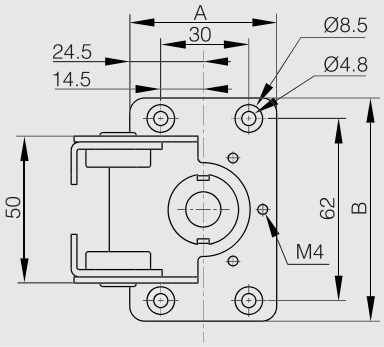

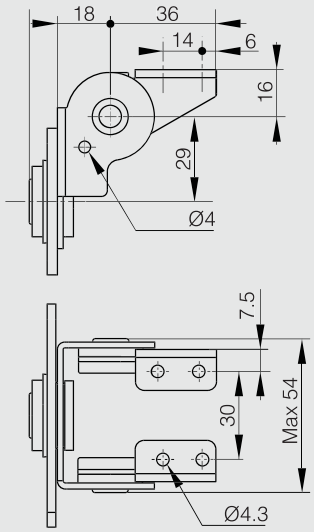

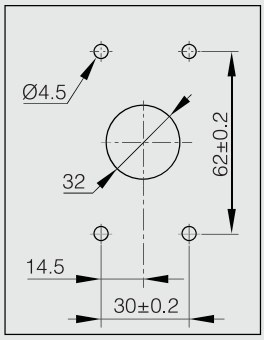

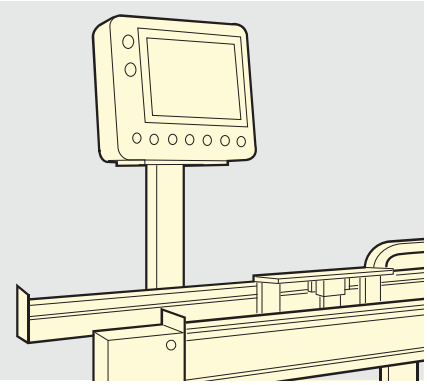

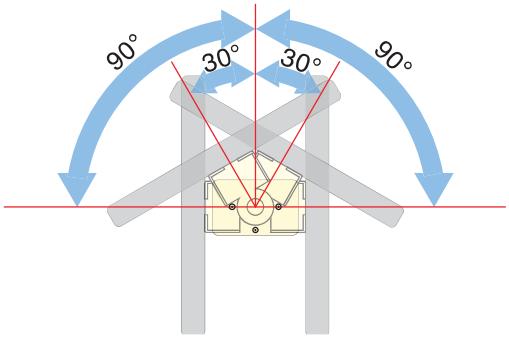

Swivel

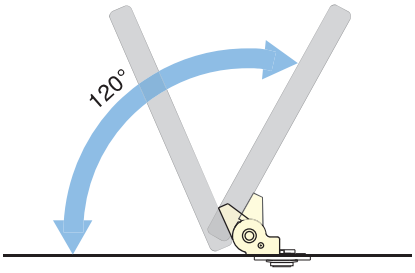

Tilt

Torque hinge A

NEW

180° STAINLESS STEEL RoHS

Provides torque stability in both directions.
For pair using: please use the same torque in both hinges.
When installing, ensure that both hinge axis are aligned.
Cycle life: 20,000 cycles.
Operating temperature: 0°C - 40°C.
For horizontal applications.

	Part number	Material	Finish	A	B	C	Torque	Note	Weight (g)
NEW	15-7-3578	430 stainless steel	polished	66	16.5	2	2.0 N.m	Type 1	30
NEW	15-7-3579	430 stainless steel	polished	66	16.5	2	2.0 N.m	Type 2	30
NEW	15-7-3580	430 stainless steel	polished	66	16.5	2	3.0 N.m	Type 1	30
NEW	15-7-3581	430 stainless steel	polished	66	16.5	2	3.0 N.m	Type 1	30
NEW	15-7-3582	430 stainless steel	polished	80	18.5	2	4.5 N.m	Type 1	65
NEW	15-7-3583	430 stainless steel	polished	80	18.5	2	4.5 N.m	Type 2	65

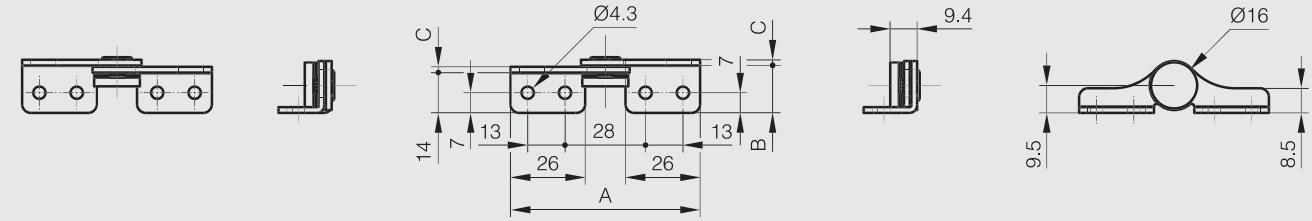

15-7-3578
15-7-3580

15-7-3579
15-7-3581

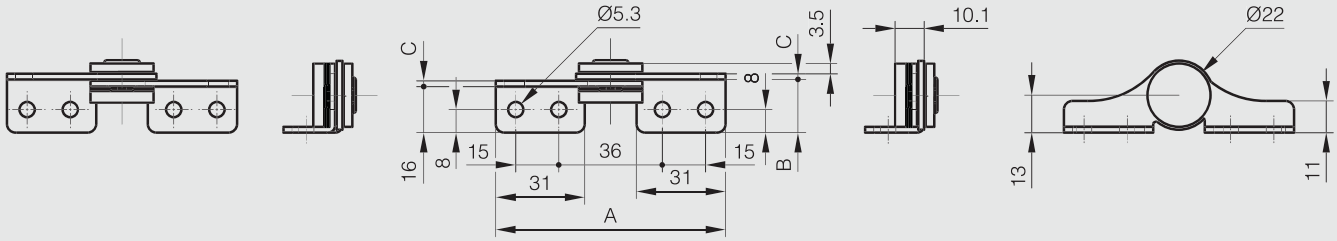

15-7-3582

15-7-3583

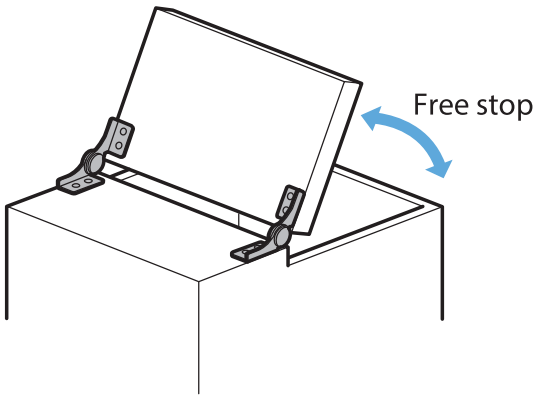

Torque hinge B

NEW

180° STAINLESS STEEL RoHS

Provides torque stability in both directions.
For pair using: Please use the same torque in both hinges.
When installing, ensure that both hinge axis are aligned.
Can not be used around water because not all parts are made of stainless steel.
Cycle life: 20,000 cycles.
Operating temperature: 0°C - 40°C.

	Part number	Material	Finish	A	B	C	Torque	Note	Weight (g)
NEW	15-7-3574	430 stainless steel	polished	43	33	2.5	0.7 N.m	Type 1	31
NEW	15-7-3575	430 stainless steel	polished	43	33	2.5	0.7 N.m	Type 2	31
NEW	15-7-3576	430 stainless steel	polished	43	33	2.5	2.0 N.m	Type 1	32
NEW	15-7-3577	430 stainless steel	polished	43	33	2.5	2.0 N.m	Type 2	32
NEW	15-7-3562	430 stainless steel	polished	43	33	2.5	3.0 N.m	Type 1	32
NEW	15-7-3563	430 stainless steel	polished	43	33	2.5	3.0 N.m	Type 2	32
NEW	15-7-3564	430 stainless steel	polished	48	40	3	4.5 N.m	Type 1	67
NEW	15-7-3565	430 stainless steel	polished	48	40	3	4.5 N.m	Type 2	67

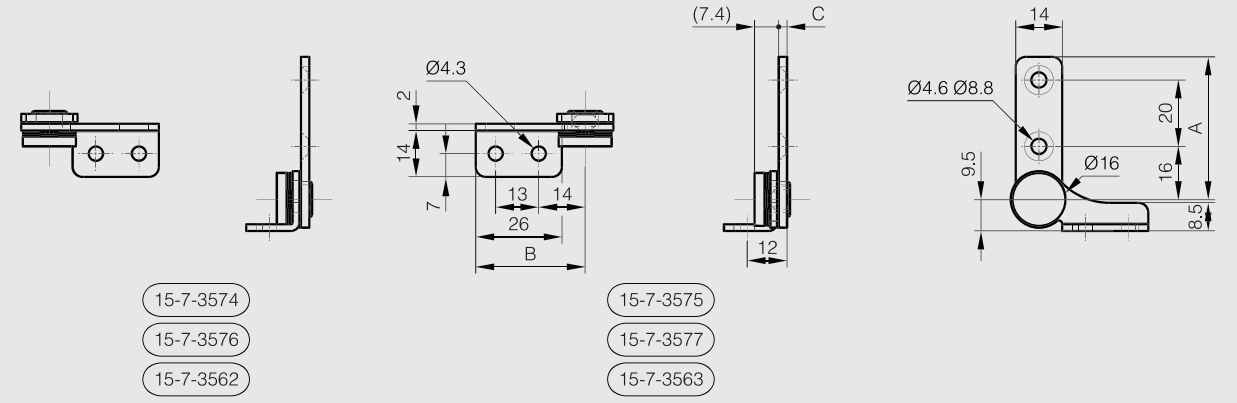

15-7-3574
15-7-3576
15-7-3562

15-7-3575
15-7-3577
15-7-3563

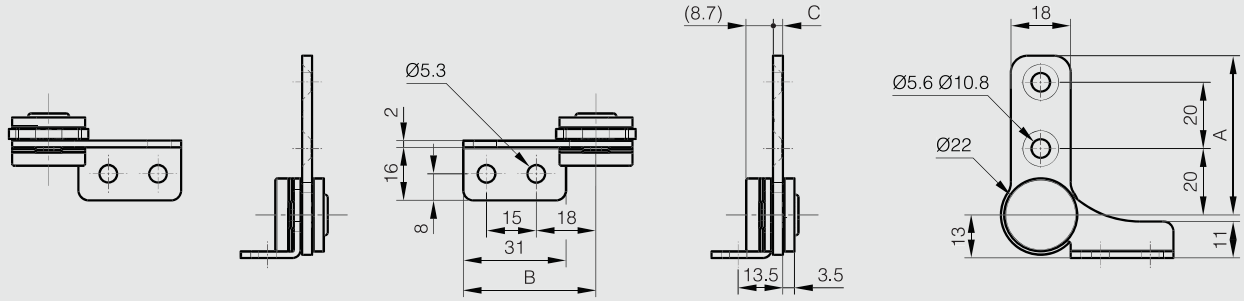

15-7-3564

15-7-3565

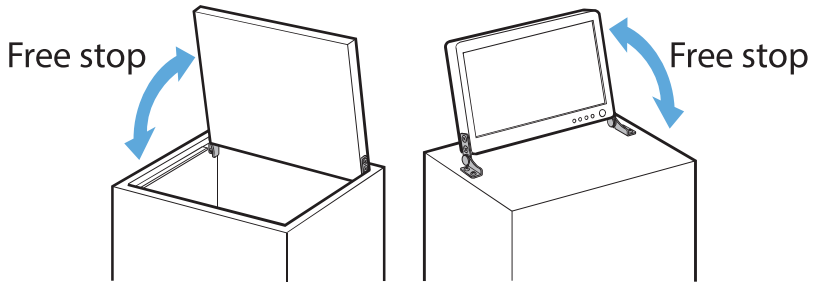

Swivel torque hinge - torque 2 N.m

Rotation angle: 360°.
Friction torque: 2 N.m.
For indoor applications (industrial control panels and monitors).

Part number	Material	Finish	A	B	Torque	Weight (g)
70-7-3636	430 stainless steel	polished	56	56	2 N.m	50

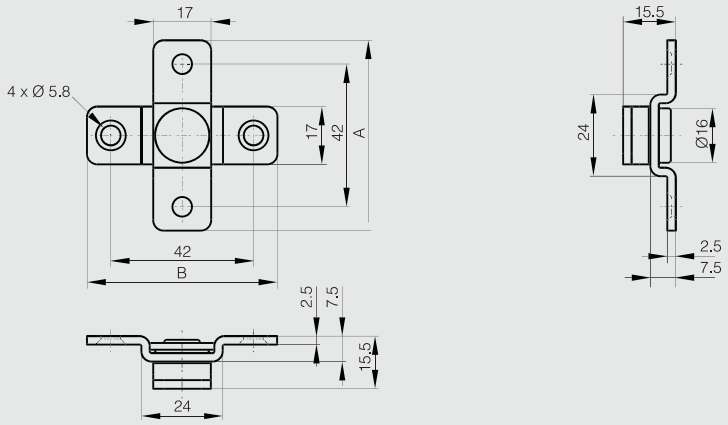

Swivel torque hinge with hole diameter 21.5 mm - 5 N.m

Rotation angle: 360°.
Friction torque: 3 or 5 N.m.
Center hole for easy cable management.
For indoor applications (industrial control panels and monitors).
Produced mainly in stainless steel, for a complete description of the materials contact us.

	Part number	Material	Finish	A	B	Torque	Weight (g)
	70-7-3637	430 stainless steel	polished	60	25	5 N.m	174
NEW	70-7-3661	430 stainless steel	polished	60	25	3 N.m	174

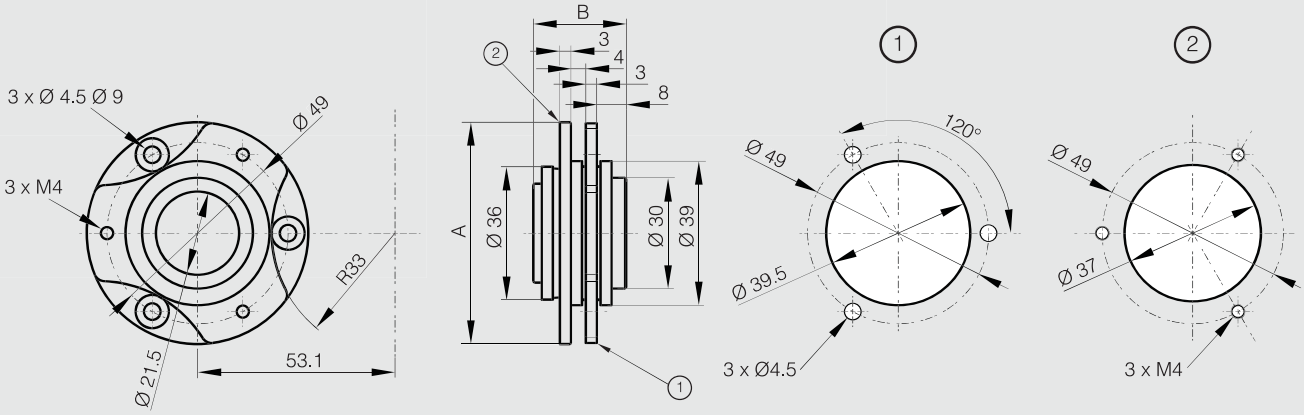

Swivel torque hinge with hole diameter 34 mm - torque 7 N.m

Rotation angle: 360°.
Friction torque: 7 N.m.
Center hole for easy cable management.
For indoor applications (industrial control panels and monitors).
Produced mainly in stainless steel, for a complete description of the materials contact us.

Part number	Material	Finish	A	B	Torque	Weight (g)
70-7-3638	430 stainless steel	polished	87	20.5	7 N.m	282

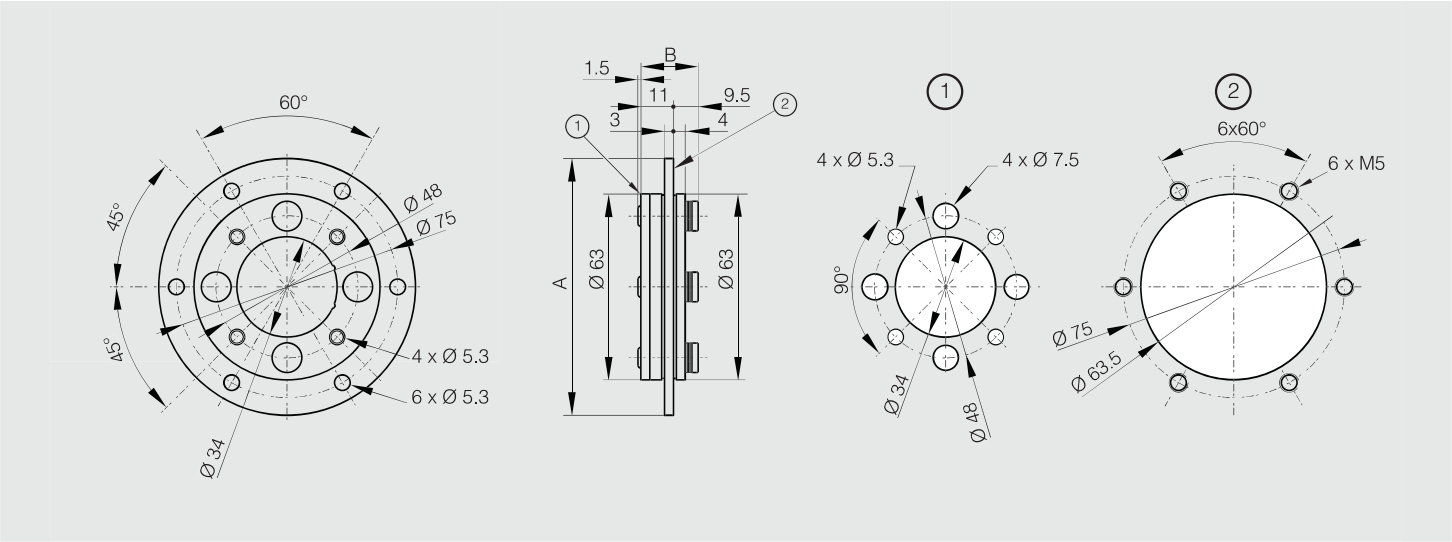

Hinge with stop at 115°

Produced mainly in stainless steel, for a complete description of the materials contact us.

Part number	Material	Finish	A	B	C	Weight (g)
52-7-3960	304 stainless steel	polished	40	105	3	122

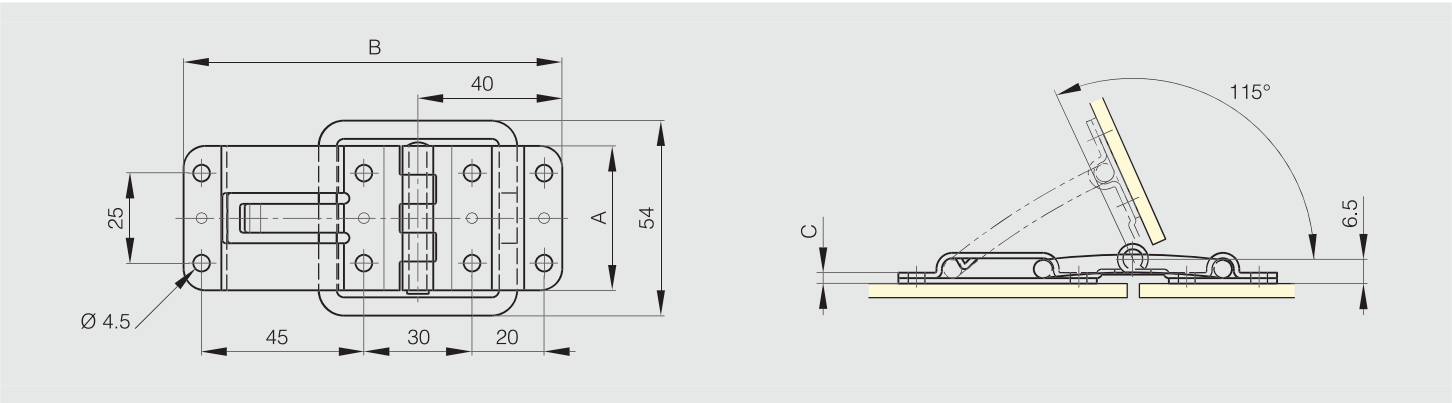

Hinge with stop at 60°

210° STAINLESS STEEL RoHS

Suitable for mounting on glass doors.
For horizontal application.

Part number	Material	Finish	A	B	C	D	Weight (g)
52-1-3840	304 stainless steel	brightened	35	133	2.5	6	140

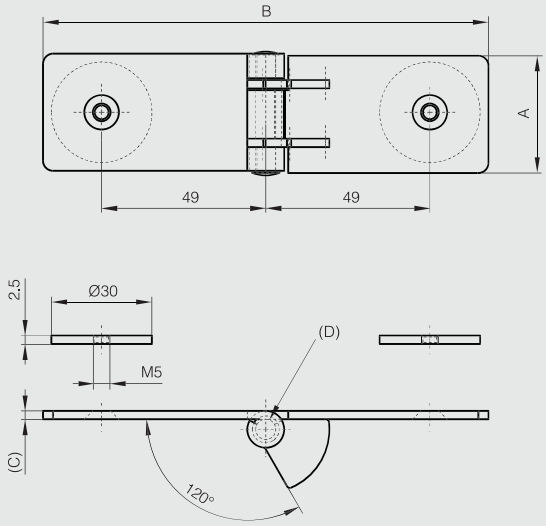

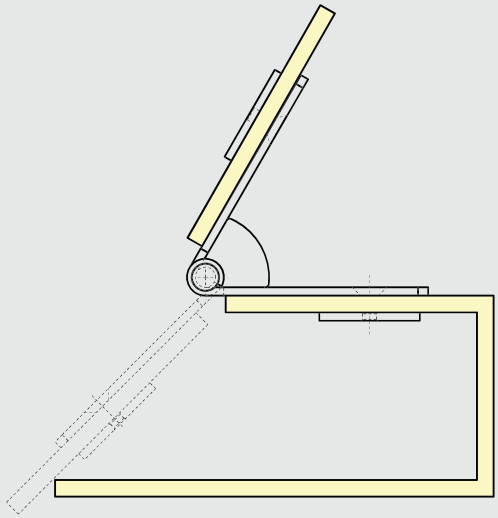

Hinge with integrated stop at 60°

NEW

180° STAINLESS STEEL RoHS

	Part number	Material	Finish	A	B	C	D	E	F	G	S	Weight (g)
NEW	52-1-4135	316 stainless steel	raw	50	50	2.5	6	5.5	34	34	5.5	70

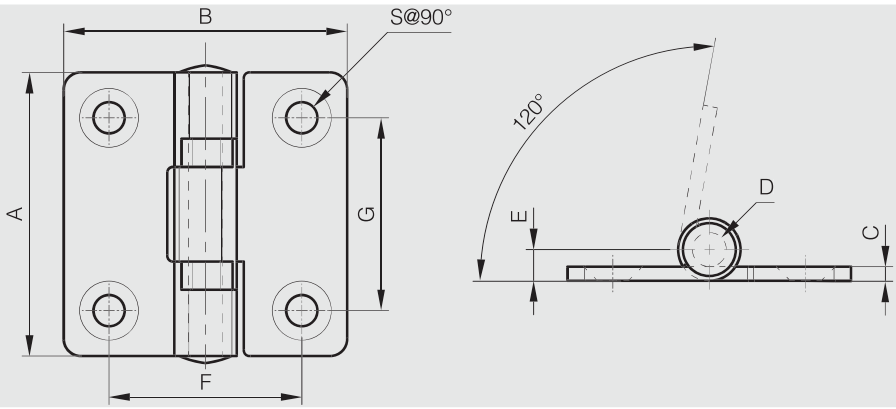

Forged hinges - 3 knuckles

Riveted pin.
Other dimensions or variants are available on request.
304 stainless steel pin.

Part number	Material	Finish	A	B	C	D	E	Note	Weight (g)
72-1-3990	304 stainless steel	raw	50	50	3	4	4	4 MR (railway code)	72
72-1-4186	304 stainless steel	raw	50	80	3	4	4	6 MR (railway code)	113
72-1-4187	304 stainless steel	raw	50	80	5	6	6	9 MR (railway code)	182

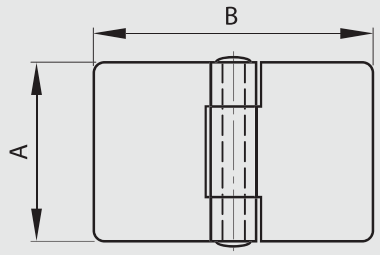

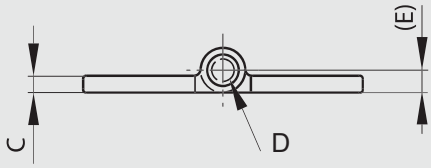

Forged hinges with reversed leaves - 3 knuckles

Riveted pin.
Other dimensions or variants are available on request.
304 stainless steel pin.

Part number	Material	Finish	A	B	C	D	E	Note	Weight (g)
72-1-3992	304 stainless steel	raw	50	50	3	4	4	20 MR (railway code)	71
72-1-3993	304 stainless steel	raw	50	80	3	4	4	22 MR (railway code)	112

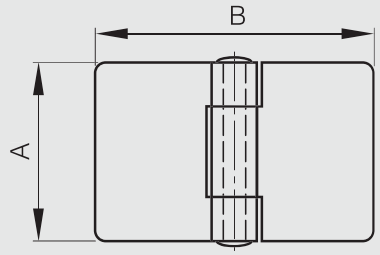

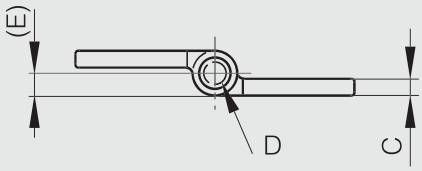

Forged hinges - 5 knuckles

Riveted pin (except part number: 72-1-4288 with removable pin).
Other dimensions or variants are available on request.
304 stainless steel pin.

Part number	Material	Finish	A	B	C	D	E	Note	Weight (g)
72-1-4290	304 stainless steel	raw	60	60	6	6	6		283
72-1-3991	304 stainless steel	raw	80	80	5	6	6	1 FR (railway code)	298
72-1-4279	304 stainless steel	raw	80	130	5	6	6	3 FR (railway code)	446
72-1-4288	304 stainless steel	raw	80	130	5	6	6	Removable pin	457

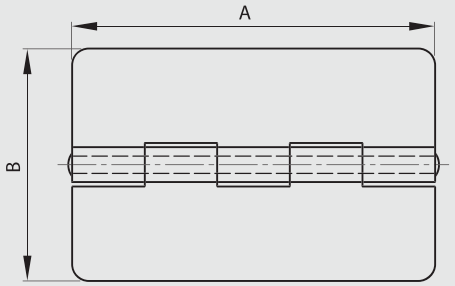

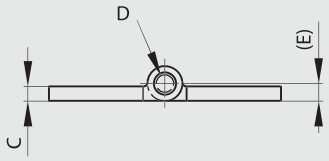

Half leaves for Modulo hinges - thickness 3 mm

Leaves can be combined together and with either:
- a 6 mm diameter expanded pin (BG) (part number 27-1-3823),
- a 6 mm pin in POM (part number 27-1-3938),
- a 6 mm diameter headed pin (BT) (part number 27-1-3829) with a plug (part number 27-1-3835).

Part number	Material	Finish	A	B	C	D	Weight (g)
52-1-3771	304 stainless steel	deburred	80	30	3	6	74
52-1-3772	304 stainless steel	deburred	80	40	3	6	93
52-1-3773	304 stainless steel	deburred	80	50	3	6	111
52-1-3774	304 stainless steel	deburred	80	60	3	6	130
52-1-3775	304 stainless steel	deburred	80	80	3	6	168

Half leaves for Modulo hinges - thickness 4 mm

Leaves can be combined together and with either:
- a 8 mm diameter expanded pin (BG) (part number 27-1-3824),
- a 8 mm diameter headed pin (BT) (part number 27-1-3830) with a plug (part number 27-1-3836).

Part number	Material	Finish	A	B	C	D	Weight (g)
52-1-3776	304 stainless steel	deburred	100	30	4	8	131
52-1-3777	304 stainless steel	deburred	100	40	4	8	163
52-1-3778	304 stainless steel	deburred	100	50	4	8	194
52-1-3779	304 stainless steel	deburred	100	60	4	8	225
52-1-3780	304 stainless steel	deburred	100	80	4	8	288

Half leaves for Modulo hinges - thickness 5 mm

Leaves can be combined together and with either:
- a 10 mm diameter expanded pin (BG) (part number 27-1-3825),
- a 10 mm diameter headed pin (BT) (part number 27-1-3831) with a plug (part number 27-1-3837).

Part number	Material	Finish	A	B	C	D	Weight (g)
52-1-3781	304 stainless steel	deburred	120	30	5	10	211
52-1-3782	304 stainless steel	deburred	120	40	5	10	258
52-1-3783	304 stainless steel	deburred	120	50	5	10	305
52-1-3784	304 stainless steel	deburred	120	60	5	10	352
52-1-3785	304 stainless steel	deburred	120	80	5	10	447

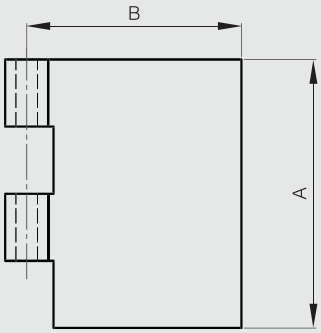

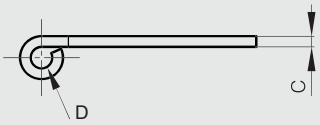

Half leaves for Modulo pin hinges - thickness 3 mm

Leaves can be combined together and with either:
- a 6 mm diameter expanded pin (BG) (part number 27-1-3823),
- a 6 mm pin in POM (part number 27-1-3938),
- a 6 mm diameter headed pin (BT) (part numbers 27-1-3826, 27-1-3829) with a plug (part numbers 27-1-3832, 27-1-3835).

Part number	Material	Finish	A	B	C	D	Weight (g)
12-1-3942	304 stainless steel	deburred	40	20	3	6	25
12-1-3869	304 stainless steel	deburred	40	30	3	6	37
12-1-3870	304 stainless steel	deburred	40	50	3	6	56
12-1-3871	304 stainless steel	deburred	40	80	3	6	84
12-1-3944	304 stainless steel	deburred	40	120	3	6	126

Half leaves for Modulo pin hinges - thickness 4 mm

Leaves can be combined together and with either:
- a 8 mm diameter expanded pin (BG) (part number 27-1-3824),
- a 8 mm diameter headed pin (BT) (part number 27-1-3830) with a plug (part number 27-1-3836).

Part number	Material	Finish	A	B	C	D	Weight (g)
12-1-3875	304 stainless steel	deburred	50	30	4	8	66
12-1-3876	304 stainless steel	deburred	50	50	4	8	97
12-1-3877	304 stainless steel	deburred	50	80	4	8	144

Half leaves for Modulo pin hinges - thickness 5 mm

Leaves can be combined together and with either:
- a 10 mm diameter expanded pin (BG) (part number 27-1-3825),
- a 10 mm diameter headed pin (BT) (part number 27-1-3831) with a plug (part number 27-1-3837).

Part number	Material	Finish	A	B	C	D	Weight (g)
12-1-3881	304 stainless steel	deburred	60	40	5	10	129
12-1-3882	304 stainless steel	deburred	60	60	5	10	176
12-1-3883	304 stainless steel	deburred	60	80	5	10	224

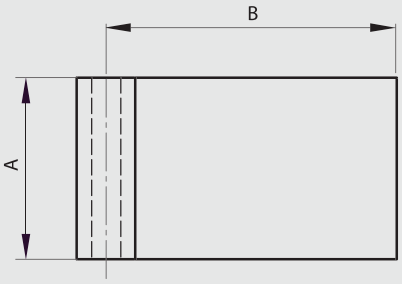

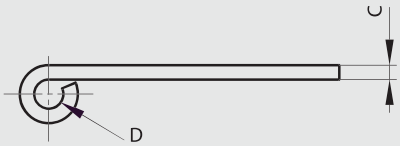

Expanded pin BG for Modulo system

This pin alone enables you to make a hinge pin for Modulo hinges.

Part number	Material	Finish	D	L	Weight (g)
27-1-3823	304 stainless steel	raw	6	80	18
27-1-3824	304 stainless steel	raw	8	100	39
27-1-3825	304 stainless steel	raw	10	120	74

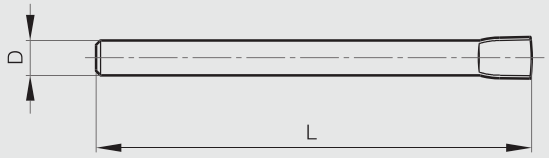

BG Broche Gonflée
Expanded pin
Gestauchter Stift

Headed pin BT for Modulo system

This pin combined with a plug (VA) enables you to make a hinge pin for Modulo hinges.

Part number	Material	Finish	D	E	L	Weight (g)
27-1-3829	304 stainless steel	raw	6	3	66	16
27-1-3830	304 stainless steel	raw	8	4	86	36
27-1-3831	304 stainless steel	raw	10	5	106	68

Plug (VA) for Modulo system

This plug combined with a headed pin (BT) enables you to make a hinge pin for Modulo hinges.

Part number	Material	Finish	D	F	L	Weight (g)
27-1-3835	304 stainless steel	raw	6	12	12	3
27-1-3836	304 stainless steel	raw	8	16	12	6
27-1-3837	304 stainless steel	raw	10	20	12	11

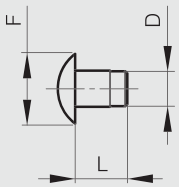

VA VAse
Plug
Stopfen

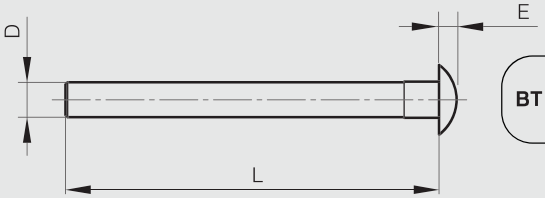

BT Broche à Tête
Headed pin
Stift mit Kopf

Heavy duty hinge 115 x 70 mm - 5 knuckles

304 stainless steel riveted pin.

	Part number	Material	Finish	A	B	C	D	Weight (g)
NEW	52-1-4141	304 stainless steel	brightened	115	70	4	10	420

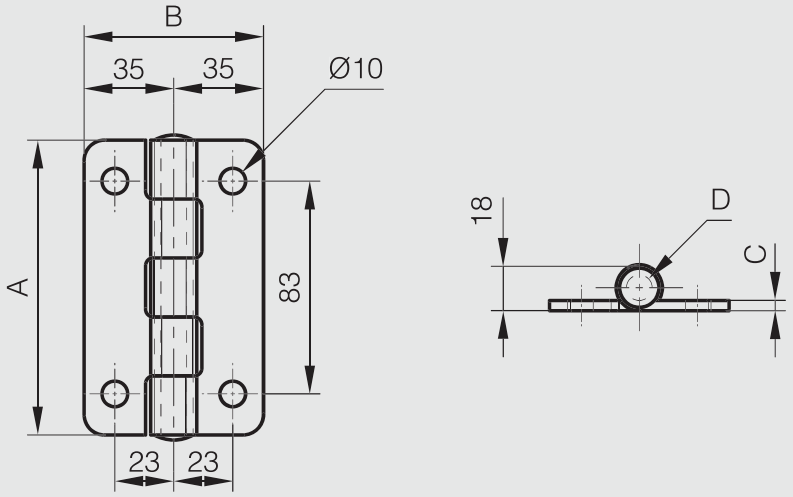

Heavy duty hinge 115 x 125 mm - 5 knuckles

304 stainless steel riveted pin.

	Part number	Material	Finish	A	B	C	D	Weight (g)
NEW	52-1-4139	304 stainless steel	brightened	115	125	4	10	570

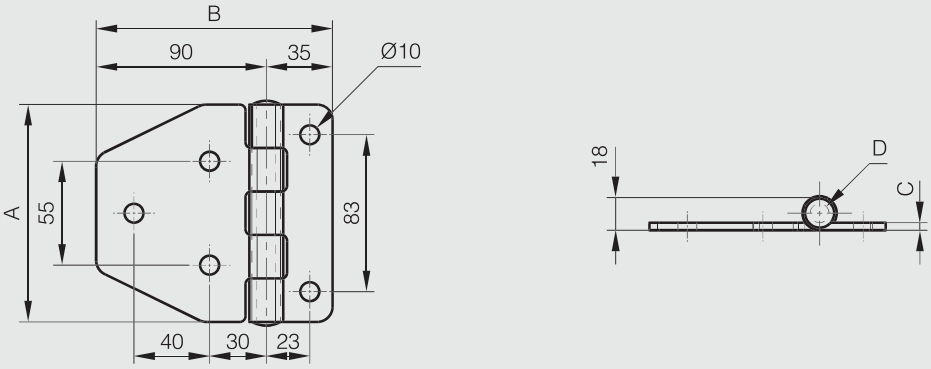

Heavy duty hinge 115 x 155 mm - 5 knuckles

304 stainless steel riveted pin.

	Part number	Material	Finish	A	B	C	D	Weight (g)
NEW	52-1-4140	304 stainless steel	brightened	115	155	4	10	650

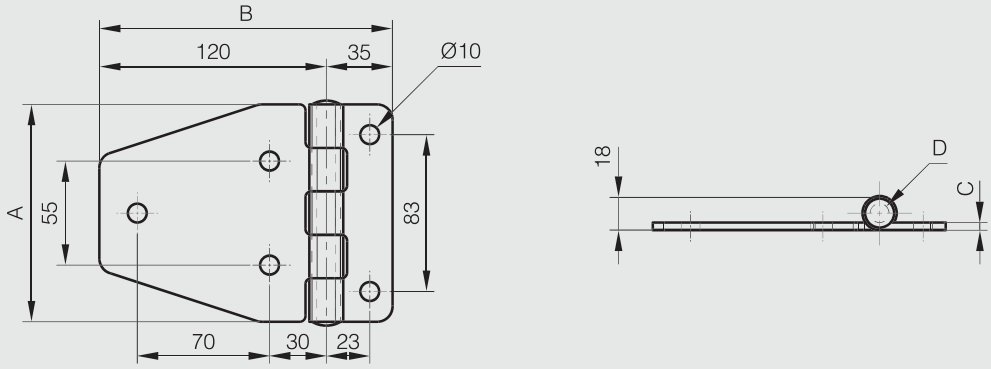

Heavy duty hinge 115 x 125 mm - 3 knuckles

304 stainless steel riveted pin.

	Part number	Material	Finish	A	B	C	D	E	Weight (g)
NEW	52-1-4142	304 stainless steel	brightened	115	125	4	10	65	470

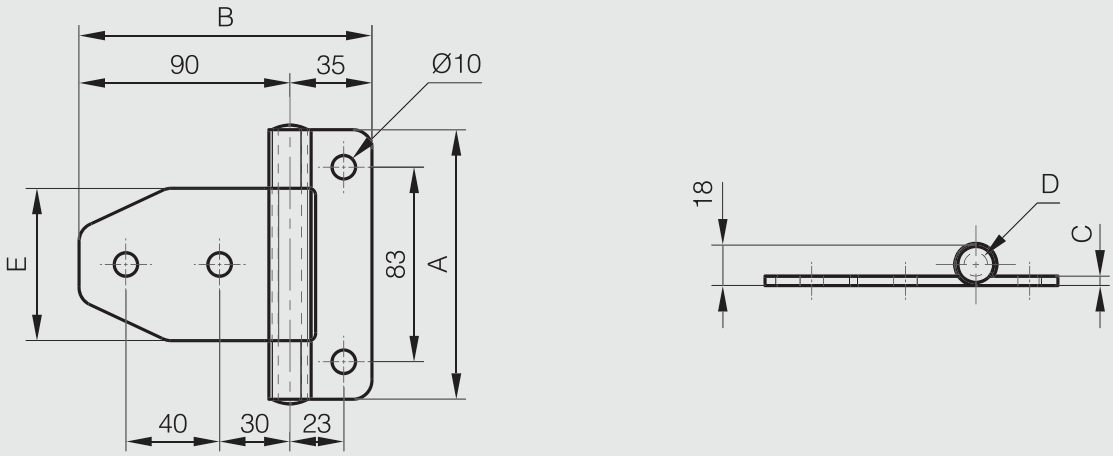

Heavy duty hinge 115 x 155 mm - 3 knuckles

304 stainless steel riveted pin.

	Part number	Material	Finish	A	B	C	D	E	Weight (g)
NEW	52-1-4143	304 stainless steel	brightened	115	155	4	10	65	530

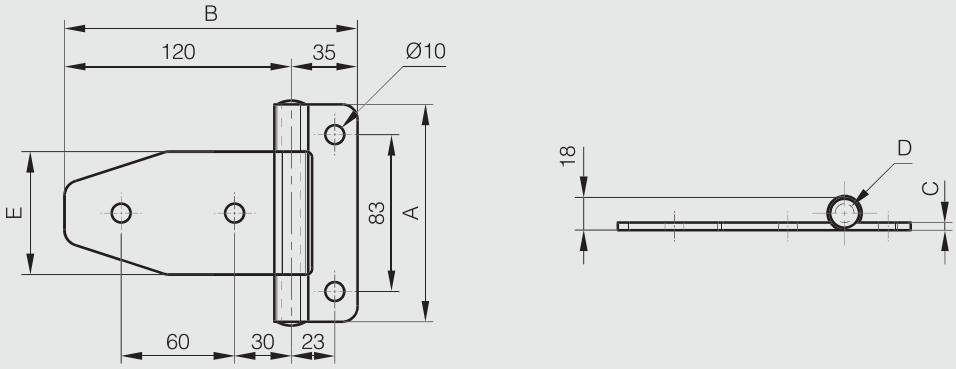

Heavy duty hinge 115 x 215 mm - 3 knuckles

304 stainless steel riveted pin.

	Part number	Material	Finish	A	B	C	D	E	Weight (g)
NEW	52-1-4144	304 stainless steel	brightened	115	215	4	10	65	650

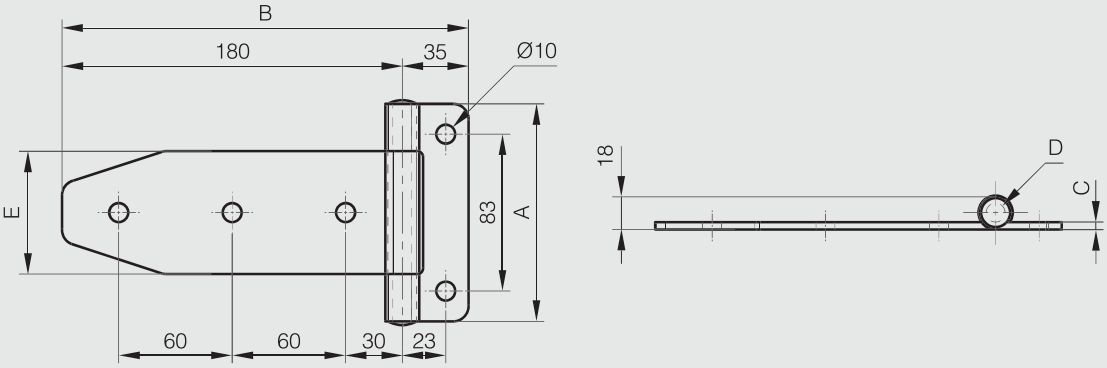

Heavy duty hinges - 65 x 230 mm

Riveted pin.

Part number	Material	Finish	A	B	C	D	E	S	Note	Weight (g)
52-1-3553	304 stainless steel	brightened	65	230	4	10	39	6.5	drilled	430
52-1-3593	304 stainless steel	brightened	65	230	4	10	39		undrilled	450

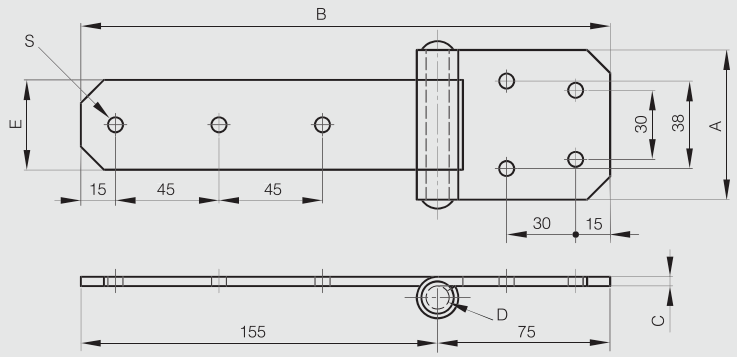

Heavy duty hinge 63.5 x 38 mm

Hinge tested to EN1935: 2002 grades 1-7
Recommended for door weights less than 40 kg, annual usage up to 10,000 cycles.

	Part number	Material	Finish	A	B	C	D	S	Weight (g)
NEW	52-7-4126	304 stainless steel	satin polished	63.5	38	2	3	5.4	45

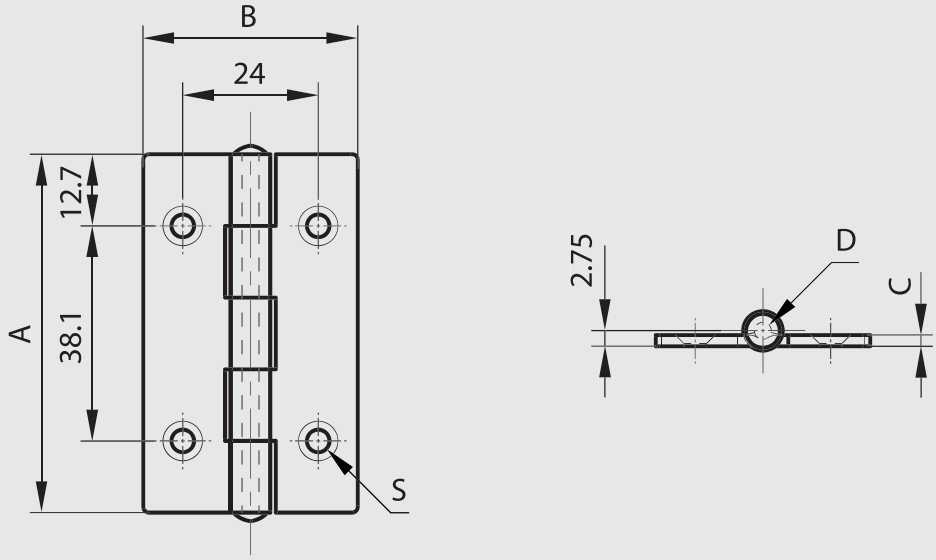

Heavy duty hinge 76 x 50 mm

NEW

270° STAINLESS STEEL

Hinge tested to EN1935: 2002 grades 1-7
Recommended for door weights less than 40 kg, annual usage up to 10,000 cycles.

	Part number	Material	Finish	A	B	C	D	S	Weight (g)
NEW	52-7-4127	304 stainless steel	satin polished	76	50	2	4	5.4	70

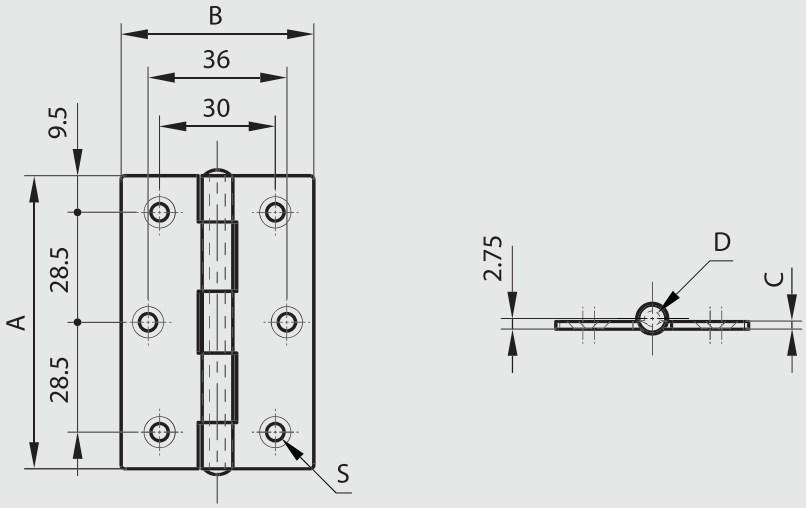

Stainless steel dual washer hinge 101.6 x 73 mm

NEW

270° STAINLESS STEEL

Hinge tested to EN1935: 2002 grade 10.
Recommended for weights less than 60 kg, annual usage up to 25,000 cycles.

	Part number	Material	Finish	A	B	C	D	S	Weight (g)
NEW	52-7-4128	304 stainless steel	satin polished	101.6	73	2	6	5.4	145

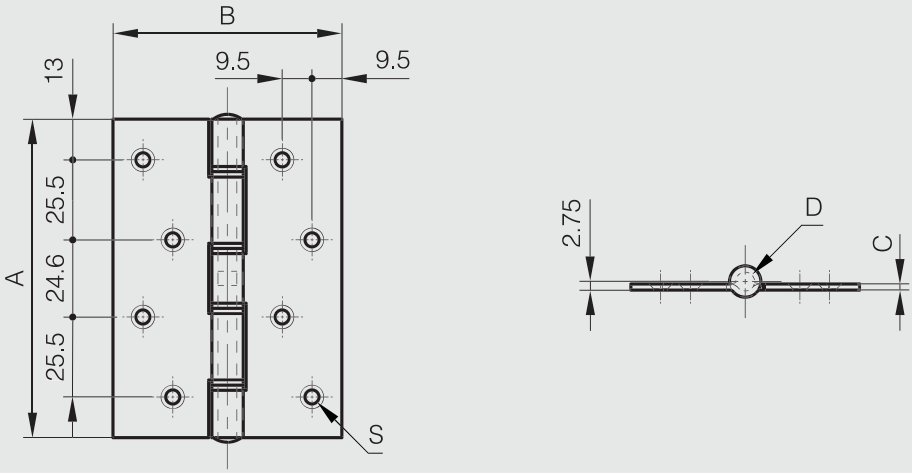

Polymer bushing and stainless steel washer hinge 101.6 x 76.2 mm

NEW

270° STAINLESS STEEL

Hinge tested to EN1935: 2002 grades 12-13.
Recommended for door weights less than 120kg, annual usage up to 100,000 cycles.

	Part number	Material	Finish	A	B	C	D	S	Weight (g)
NEW	52-7-4129	304 stainless steel	satin polished	101.6	76.2	2.5	7	7.4	205

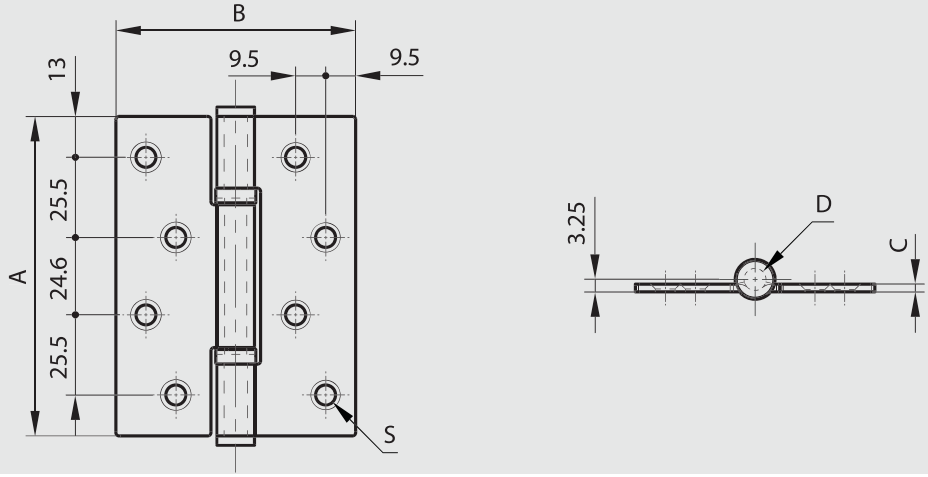

Bronze bushing hinge 101.6 x 76.2 mm

NEW

270° STAINLESS STEEL

Hinge tested to EN1935: 2002 grade 13.
Recommended for door weights less than 120 kg, annual usage up to 100,000 cycles.
Door thickness: 35 mm to 54 mm

	Part number	Material	Finish	A	B	C	D	S	Weight (g)
NEW	52-7-4130	304 stainless steel	satin polished	101.6	76.2	2.5	5	6.35	185

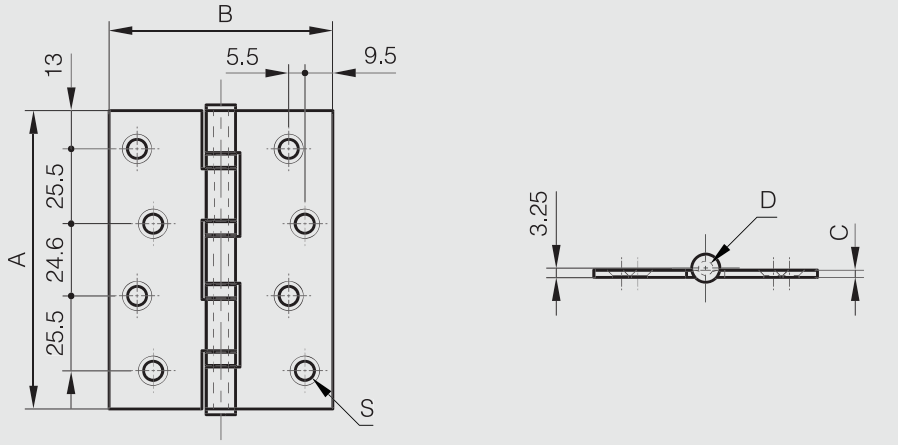

Polymer shrouded bushing hinge 101.6 x 76.2 mm

NEW

270° STAINLESS STEEL

Hinge tested to EN1935: 2002 grades 13-14.
Recommended for door weights less than 160 kg, annual usage up to 200,000 cycles.
Door thickness: 44 mm to 54 mm.

	Part number	Material	Finish	A	B	C	D	S	Weight (g)
NEW	52-7-4131	304 stainless steel	satin polished	101.6	76.2	3	7	8	235

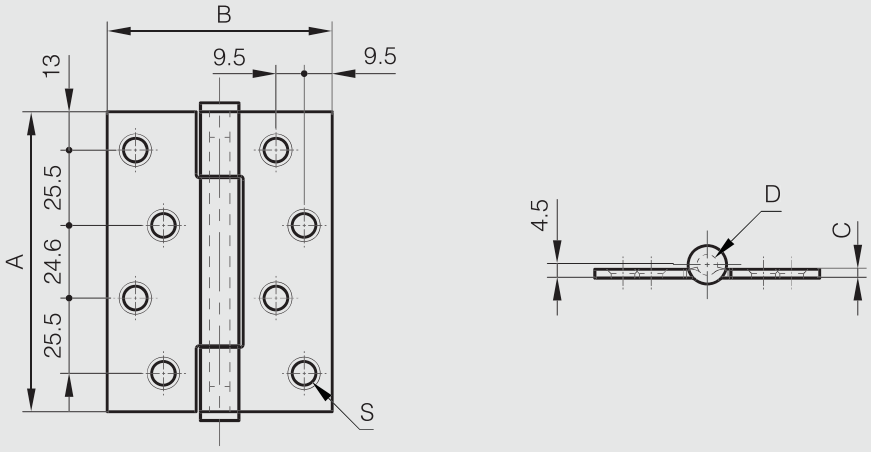

Polymer shrouded bushing hinge 101.6 x 88.9 mm

NEW

270° STAINLESS STEEL

Hinge tested to EN1935: 2002 grades 13-14.
Recommended for door weights less than 160 kg, annual usage up to 200,000 cycles.
Door thickness: 44 mm to 54 mm.
Lift-off hinge version 14-7-3902 and 14-7-3903

	Part number	Material	Finish	A	B	C	D	S	Weight (g)
NEW	52-7-4132	304 stainless steel	satin polished	101.6	88.9	3	7	8	270

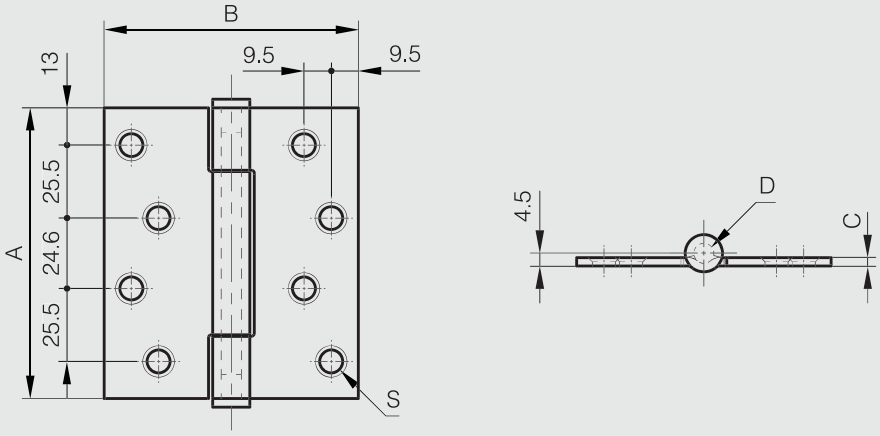

Polymer bushing lift-off hinge

Hinge tested to EN1935: 2002 grades 13-14.
Recommended for door weights less than 160 kg, annual usage up to 200,000 cycles.
Door thickness: 44 mm to 54 mm.
Standard hinge version 52-7-4132.

	Part number	Material	Finish	A	B	C	D	S	Note	Weight (g)
NEW	14-7-3902	304 stainless steel	satin polished	101.6	88.9	3	7	8.5	Type 2	255
NEW	14-7-3903	stainless steel	satin polished	101.6	88.9	3	7	8.5	Type 1	255

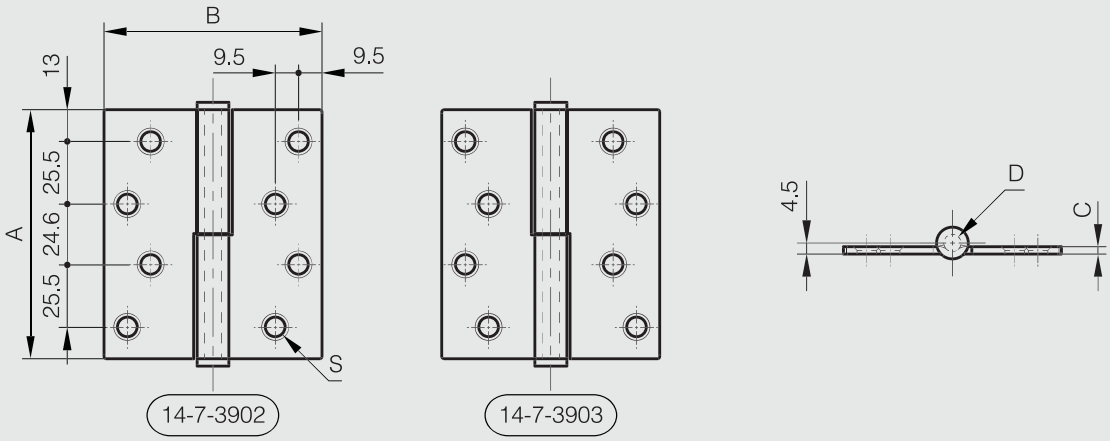

Stainless steel and bronze shrouded bushing hinge 114.3 x 114.3 mm

Hinge tested to EN1935: 2002 grades 12-14.
Recommended for door weights less than 160 kg, annual usage up to 150,000 cycles.
For heavy duty applications.
Door thickness: 44 mm to 68 mm.

	Part number	Material	Finish	A	B	C	D	S	Weight (g)
NEW	52-7-4133	316 stainless steel	satin polished	114.3	114.3	4	9	8.5	570

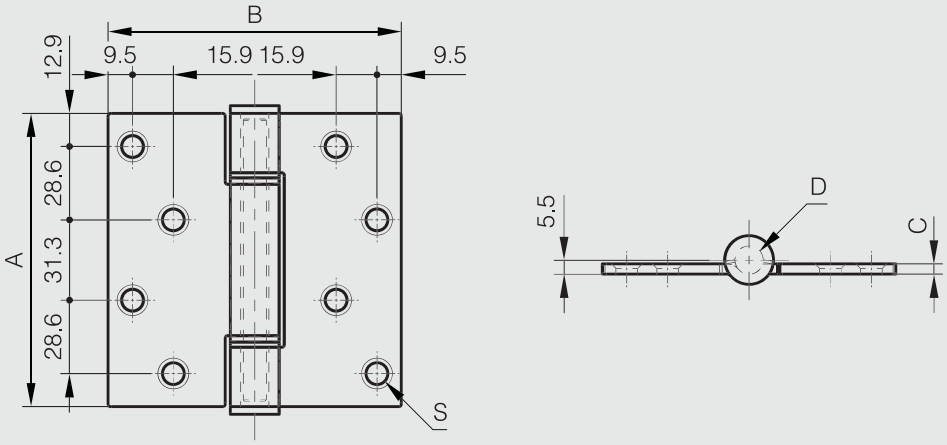

Flat top weld-on stainless steel hinges - stainless steel pin - brass washer

Fixed pin and washer. Produced mainly in stainless steel, for a complete description of the materials contact us.

Part number	Material	Finish	A	B	C	D	Weight (g)
14-7-3693	304 stainless steel	raw	60	12	10	6	40
14-7-3696	304 stainless steel	raw	80	16	13	7	90
14-7-3697	304 stainless steel	raw	100	20	16	9	115
14-7-3698	304 stainless steel	raw	120	20	16	9	135

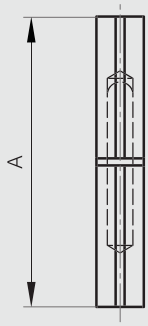

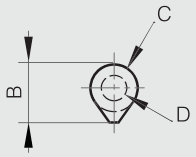

Heavy duty pin hinges

With chamfered edges.
Produced mainly in stainless steel, for a complete description of the materials contact us.

Part number	Material	Finish	A	B	C	D	E	F	H	S	Weight (g)
12-7-3810	303 stainless steel	brushed	64	13	16	6	16	16	9.5	M5x6	90
12-7-3811	303 stainless steel	brushed	76	13	19	6	19	18	13	M6x7.5	130

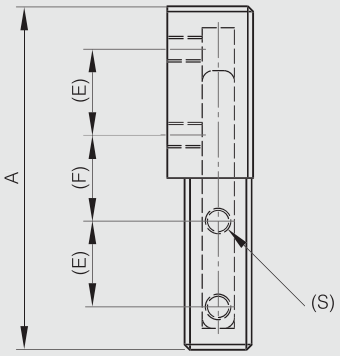

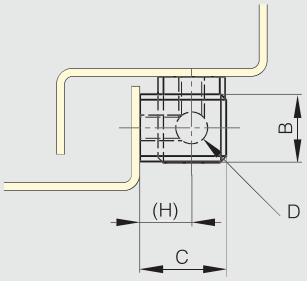

Square design stainless steel hinge

Hinges: 304 stainless steel.
Pin: 304 stainless steel.

Models equivalent to square design polyamide hinges (part number 54-1-3565 and 54-1-3566).

	Part number	Material	Finish	A	B	C	D	E	F	G	S	Weight (g)
NEW	72-1-4416	304 stainless steel	brightened	40	40	5.2	4	5.7	25	25	5.3	60
NEW	72-1-4417	304 stainless steel	brightened	50	50	5.9	5	6.4	30	30	6.4	100

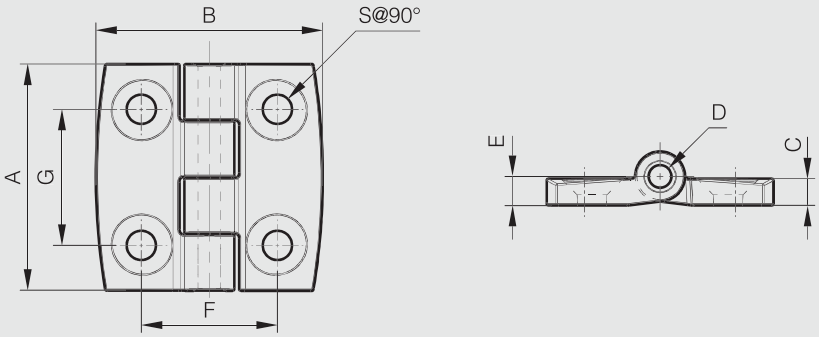

Hinge 30 x 30 mm

Part number	Material	Finish	A	B	C	D	S	Weight (g)
52-1-4038	304 stainless steel	raw	30	30	0.8	2	3.3	8

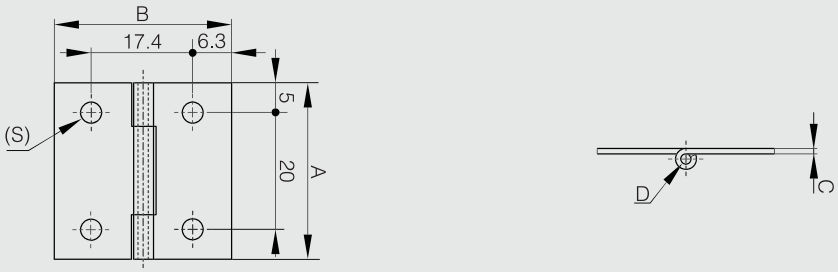

Square hinges with two offset leaves and removable pin - with 4 holes

NEW

Removable pin.

Part number	Material	Finish	A	B	C	D	F	G	S	Weight (g)
52-1-3608	304 stainless steel	raw	40	40	2	4	8	24	4	34
52-1-3610	304 stainless steel	raw	50	50	2	6	8	34	4.5	61
52-1-3612	304 stainless steel	raw	60	60	2	6	8	40	4.5	82

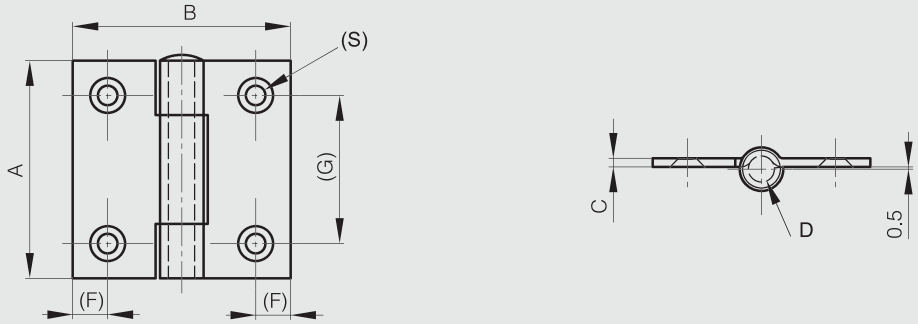

Square hinges with two offset leaves and removable pin - with 6 holes

NEW

Removable pin.

	Part number	Material	Finish	A	B	C	D	F	G	H	S	Note	Weight (g)
	52-1-3614	304 stainless steel	raw	70	70	2	6	8	50	10	4.5		156
NS	**52-1-4107**	304 stainless steel	raw	70	70	2	6	8	50	10	4.5	with M5 studs	174
	52-1-3616	304 stainless steel	raw	80	80	2.5	6	8	60	12.5	4.5		164
NS	**52-1-4110**	304 stainless steel	raw	80	80	2.5	6	8	60	12.5	4.5	with M5 studs	182

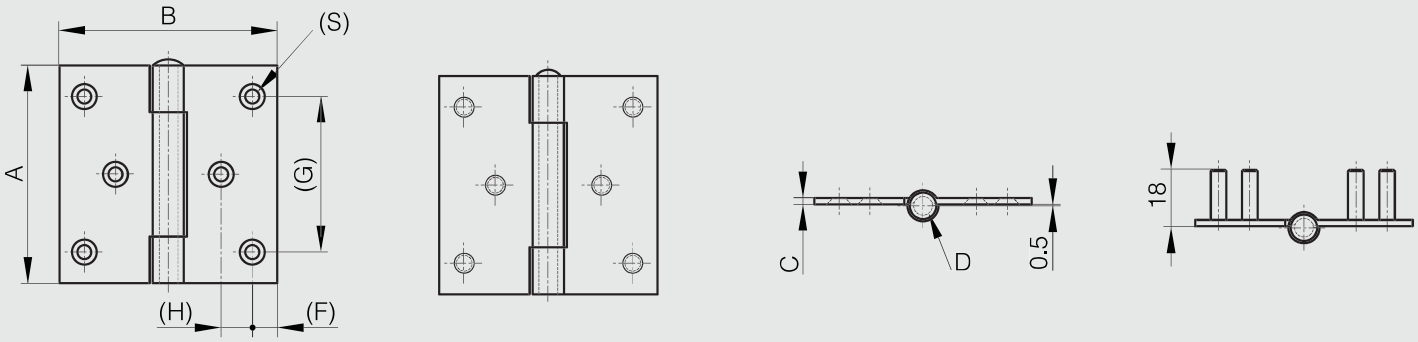

52-1-3614 & 52-1-3616

52-1-4107 & 52-1-4110

Square hinges with two offset leaves and riveted pin - with 4 holes

Riveted pin.

Part number	Material	Finish	A	B	C	D	F	G	S	Weight (g)
52-1-3609	304 stainless steel	raw	40	40	2	4	8	24	4	34
52-1-3611	304 stainless steel	raw	50	50	2	6	8	34	4.5	61
52-1-3613	304 stainless steel	raw	60	60	2	6	8	40	4.5	82
52-1-3872	316L stainless steel	raw	40	40	2	4	8	24	4	34
52-1-3709	316L stainless steel	raw	50	50	2	6	8	34	4.5	61
52-1-3873	316L stainless steel	raw	60	60	2	6	8	40	4.5	82

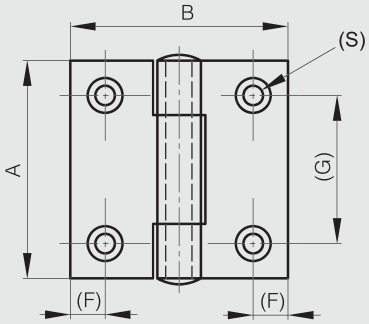

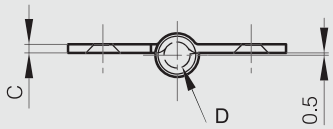

Square hinges with two offset leaves and riveted pin - with 6 holes

NEW

Riveted pin.

	Part number	Material	Finish	A	B	C	D	F	G	H	S	Note	Weight (g)
	52-1-3615	304 stainless steel	raw	70	70	2	6	8	50	10	4.5		156
NS	**52-1-4108**	304 stainless steel	raw	70	70	2	6	8	50	10	4.5	with M5 studs	174
	52-1-3617	304 stainless steel	raw	80	80	2.5	6	8	60	12.5	4.5		164
NS	**52-1-4111**	304 stainless steel	raw	80	80	2.5	6	8	60	12.5	4.5	with M5 studs	182

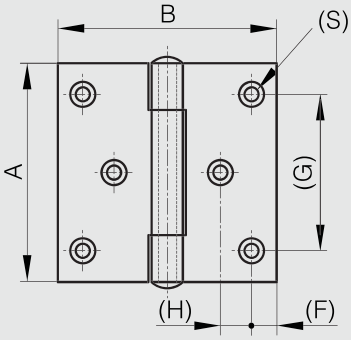

52-1-3615 & 52-1-3617

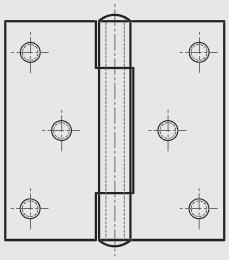

52-1-4108 & 52-1-4111

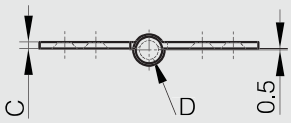

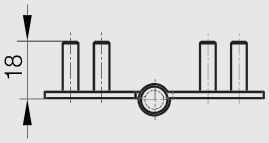

Square hinges with no offset leaf and riveted pin - no holes

Riveted pin.

Part number	Material	Finish	A	B	C	D	Weight (g)
52-1-3679	304 stainless steel	raw	40	40	2	4	37
52-1-3694	304 stainless steel	raw	50	50	2	6	62
52-1-3695	304 stainless steel	raw	60	60	2	6	82
52-1-3864	304 stainless steel	raw	70	70	2	6	112
52-1-3865	304 stainless steel	raw	80	80	2.5	6	168
52-1-3866	304 stainless steel	raw	100	100	2.5	6	250
52-1-3869	316L stainless steel	raw	40	40	2	4	37
52-1-3870	316L stainless steel	raw	50	50	2	6	61
52-1-3871	316L stainless steel	raw	60	60	2	6	90

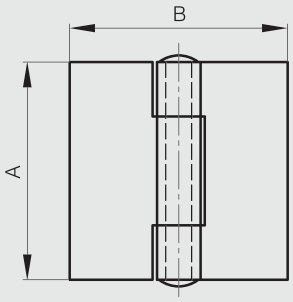

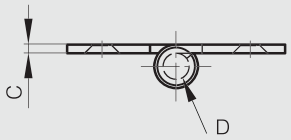

Square hinges with no offset leaf and riveted pin - with 4 holes

Riveted pin.

Part number	Material	Finish	A	B	C	D	F	G	S	Weight (g)
52-1-3861	304 stainless steel	raw	40	40	2	4	8	24	4	35
52-1-3862	304 stainless steel	raw	50	50	2	6	8	34	4.5	61
52-1-3863	304 stainless steel	raw	60	60	2	6	8	40	4.5	83
52-1-3874	316L stainless steel	raw	40	40	2	4	8	24	4	35
52-1-3710	316L stainless steel	raw	50	50	2	6	8	34	4.5	62
52-1-3875	316L stainless steel	raw	60	60	2	6	8	40	4.5	85

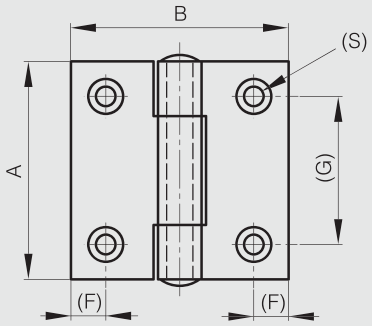

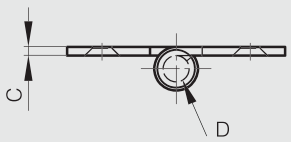

Square hinges with no offset leaf and riveted pin - with 6 holes

Riveted pin.

	Part number	Material	Finish	A	B	C	D	F	G	H	S	Note	Weight (g)
	52-1-3867	304 stainless steel	raw	70	70	2	6	8	50	10	4.5		110
NS	52-1-4109	304 stainless steel	raw	70	70	2	6	8	50	10	4.5	with M5 studs	128
	52-1-3868	304 stainless steel	raw	80	80	2.5	6	8	60	12.5	4.5		166
NS	52-1-4112	304 stainless steel	raw	80	80	2.5	6	8	60	12.5	4.5	with M5 studs	184

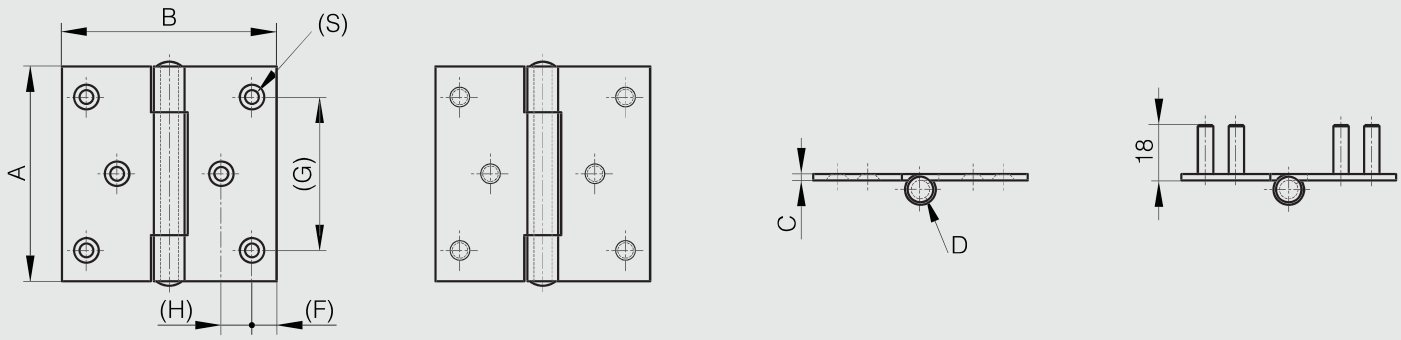

52-1-3867 & 52-1-3868

52-1-4109 & 52-1-4112

Hinge with nylon washers

Teflon plated pin in 304 stainless steel blocked with 2 punches.
4 nylon washers.
Produced mainly in stainless steel, for a complete description of the materials contact us.

Part number	Material	Finish	A	B	C	D	E	F	G	S	Weight (g)
52-1-3790	304 stainless steel	raw	75	80	2	6	10.5	6	52	7.5	120

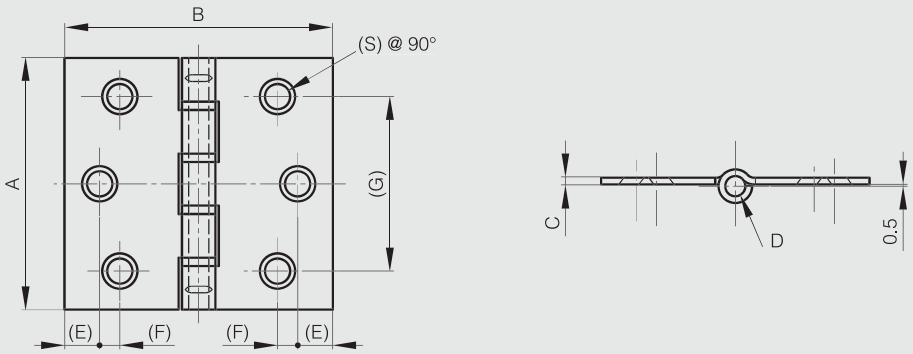

Hinge 50 x 30 mm

Drilled hinge with riveted pin.

Part number	Material	Finish	A	B	C	D	F	G	S	Weight (g)
52-1-3571	304 stainless steel	raw	50	30	1	3	6.5	35	3.5	18

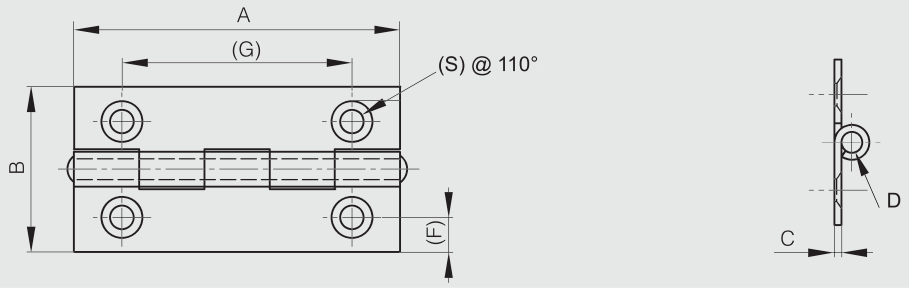

Hinges 50 x 40 mm

Available in 2 versions: with holes or countersunk holes

Part number	Material	Finish	A	B	C	D	F	G	S	Note	Weight (g)
52-1-3592	304 stainless steel	raw	50	40	1.2	3	8.5	36	5	countersunk version	24
52-1-3607	304 stainless steel	raw	50	40	1.2	3	8.5	36	5	drilled	25

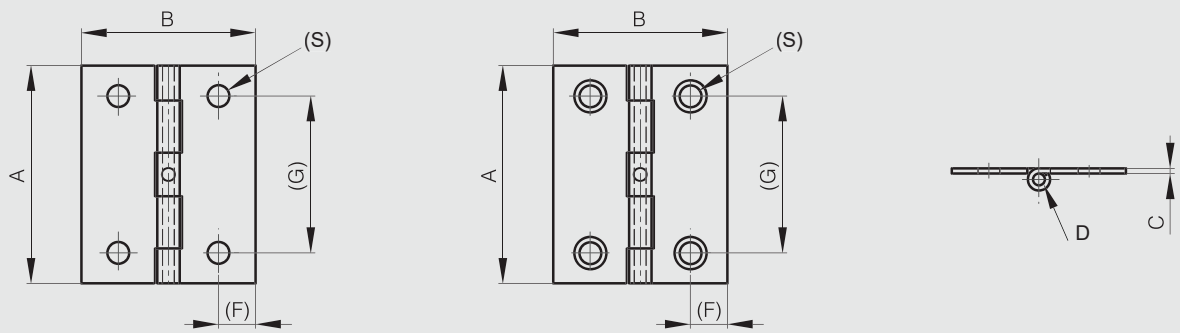

Hinges 60 x 35 mm

Part number	Material	Finish	A	B	C	D	S	Note	Weight (g)
52-1-4009	304 stainless steel	raw	60	35	1	2	4	countersunk version	20
52-1-4051	304 stainless steel	raw	60	35	1	2	4	drilled	21

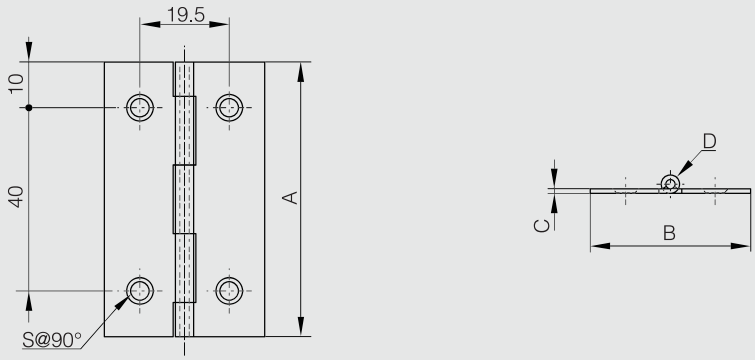

Hinge 75 x 40 mm

Part number	Material	Finish	A	B	C	D	E	F	G	Weight (g)
52-1-3990	304 stainless steel	raw	75	40	1.5	3	6	7.5	48	46

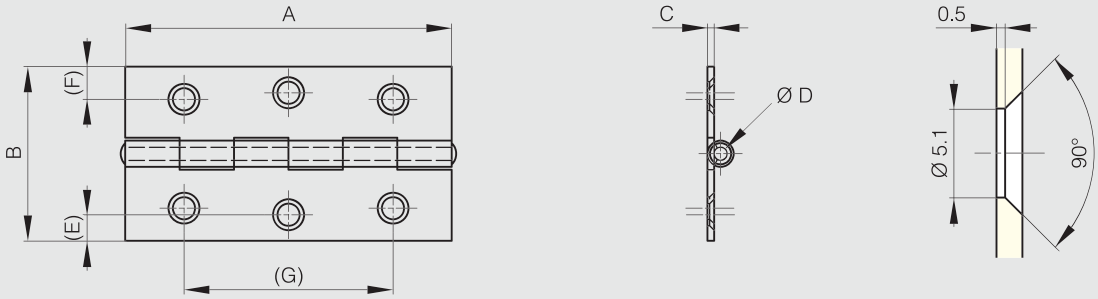

Lift-off hinges 80 x 60 mm - stainless steel

Pin and washer in stainless steel.

Part number	Material	Finish	A	B	C	D	S	Note	Weight (g)
14-1-3872	304 stainless steel	raw	80	60	2	6	6.3	type 1	115
14-1-3873	304 stainless steel	raw	80	60	2	6	6.3	type 2	115

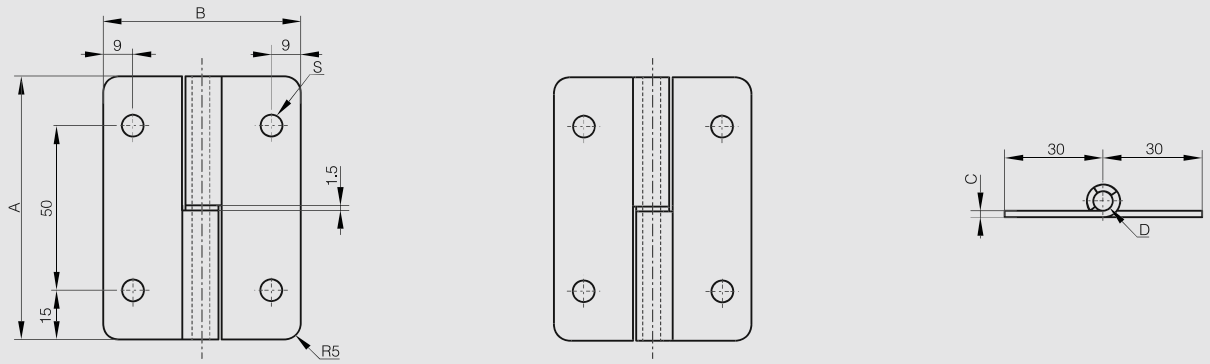

14-1-3872 14-1-3873

Lift-off hinges 80 x 80 mm - stainless steel with 6 holes

Only the visible side has a brushed finish.
Produced mainly in stainless steel, for a complete description of the materials contact us.

Part number	Material	Finish	A	B	C	D	S	Note	Weight (g)
14-7-3727	304 stainless steel	brushed	80	80	2.5	7	5.8	type 1 / square corners	175
14-7-3728	304 stainless steel	brushed	80	80	2.5	7	5.8	type 2 / square corners	175

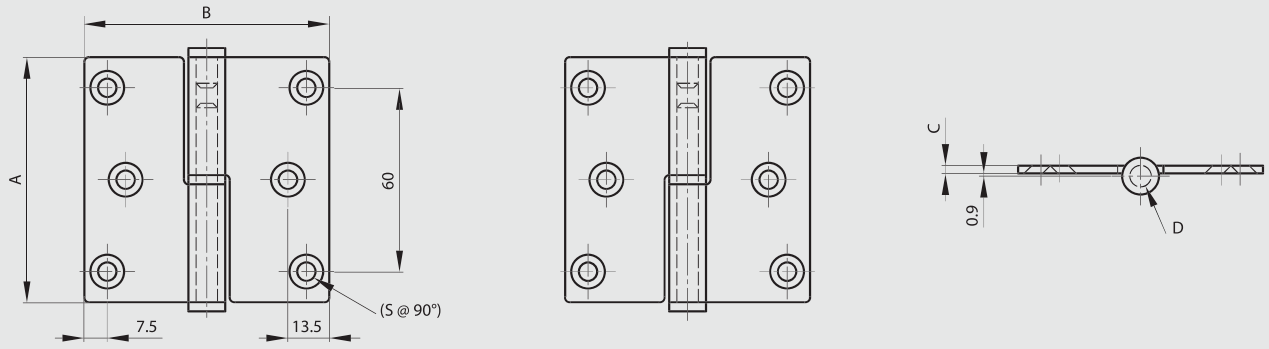

14-7-3727 14-7-3728

Lift-off hinges 100 x 82 mm - stainless steel with 8 holes

Only the visible side has a brushed finish.
Produced mainly in stainless steel, for a complete description of the materials contact us.

Part number	Material	Finish	A	B	C	D	S	Note	Weight (g)
14-7-3675	304 stainless steel	brushed	100	82	2.5	7	6	type 1 / square corners	220
14-7-3679	304 stainless steel	brushed	100	82	2.5	7	6	type 2 / square corners	220

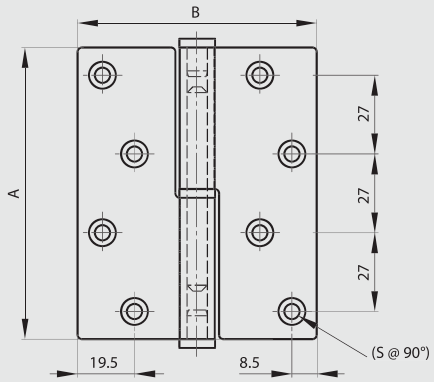

14-7-3675

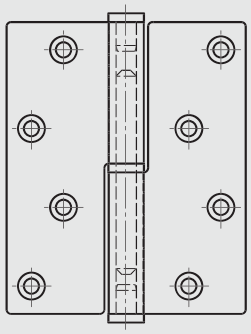

14-7-3679

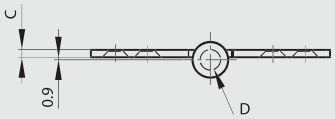

Hinge for marine applications - 36.5 x 38 mm

Riveted pin.

Part number	Material	Finish	A	B	C	D	S	Weight (g)
52-1-3945	316 stainless steel	polished	36.5	38	2	5	6	32

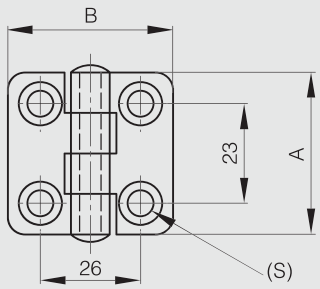

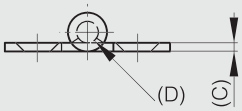

Hinge for marine applications - 36.5 x 56.5 mm

Riveted pin.

Part number	Material	Finish	A	B	C	D	S	Weight (g)
52-1-3947	316 stainless steel	polished	36.5	56.5	2	5	6	40

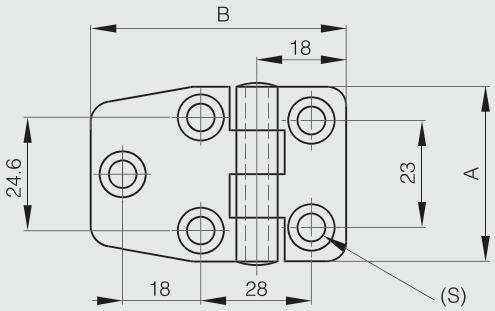

Hinge for marine applications - 36.5 x 76 mm

Riveted pin.

Part number	Material	Finish	A	B	C	D	S	Weight (g)
52-1-3944	316 stainless steel	polished	36.5	76	2	4	6	50

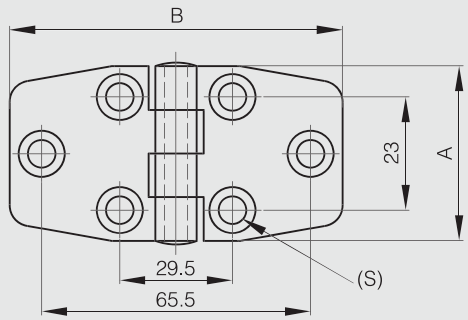

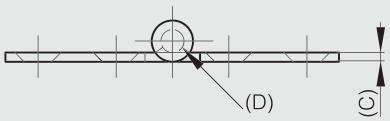

Hinges for marine applications - 36.5 x 65.5 mm

Riveted pin.

Part number	Material	Finish	A	B	C	D	E	S	Weight (g)
52-1-3950	316 stainless steel	polished	36.5	65.5	2	5	10	6	54
52-1-3949	316 stainless steel	polished	36.5	65.5	2	5	15.9	6	54
52-1-3948	316 stainless steel	polished	36.5	65.5	2	5	19.2	6	54

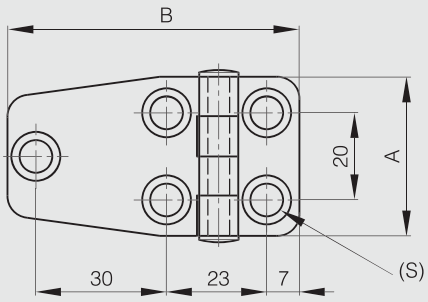

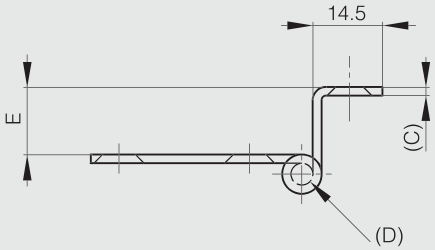

Hinge for marine applications - 38.1 x 71.1 mm

Part number	Material	Finish	A	B	C	D	S	Weight (g)
52-1-3898	316 stainless steel	polished	38.1	71.1	2	3	6	42

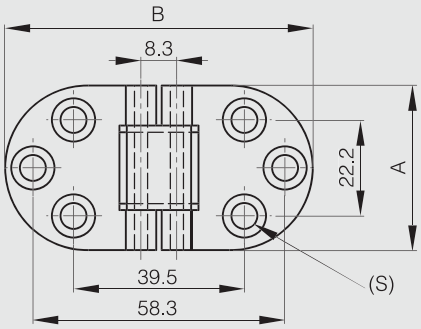

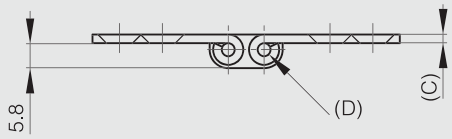

Hinge for marine applications - 52 x 70 mm

Riveted pin.

Part number	Material	Finish	A	B	C	D	S	Weight (g)
52-1-3964	316 stainless steel	brushed	52	70	1.2	4	5.2	45

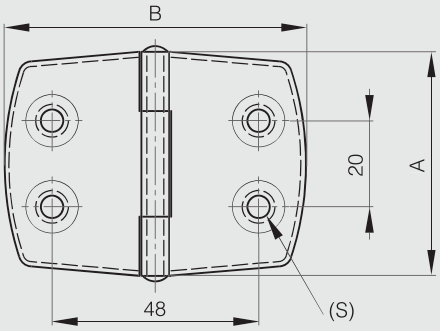

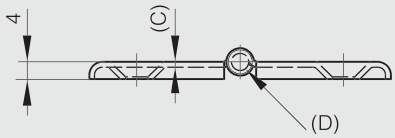

Hinge for marine applications - 30 x 101 mm

Riveted pin.

Part number	Material	Finish	A	B	C	D	S	Weight (g)
52-1-3954	316 stainless steel	polished	30	101	2	5	6	48

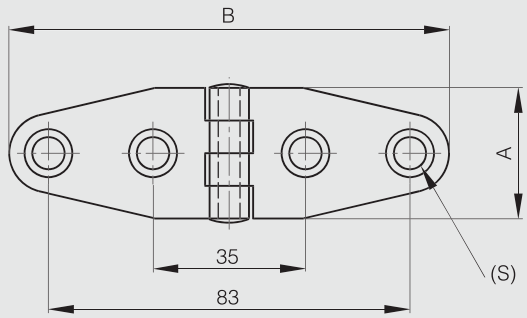

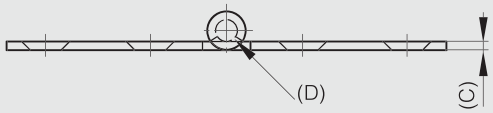

Hinge for marine applications - 38 x 178 mm

Riveted pin.

Part number	Material	Finish	A	B	C	D	S	Weight (g)
52-1-3957	316 stainless steel	polished	38	178	2	5	6	96

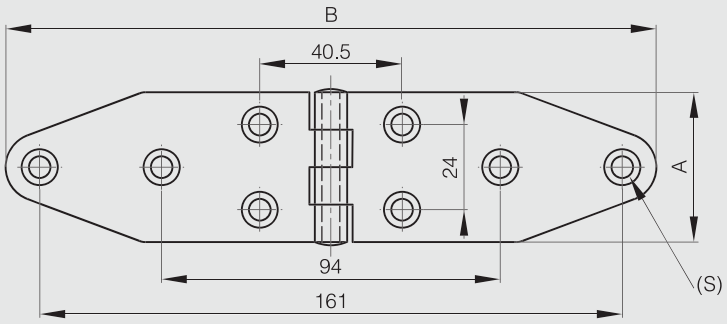

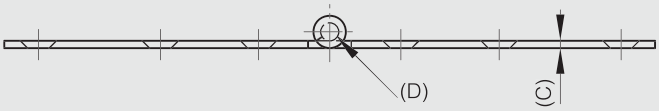

Hinge for marine applications - 40.1 x 137.3 mm

Riveted pin.

Part number	Material	Finish	A	B	C	D	S	Weight (g)
52-1-3953	316 stainless steel	polished	40.1	137.3	2	5	6	80

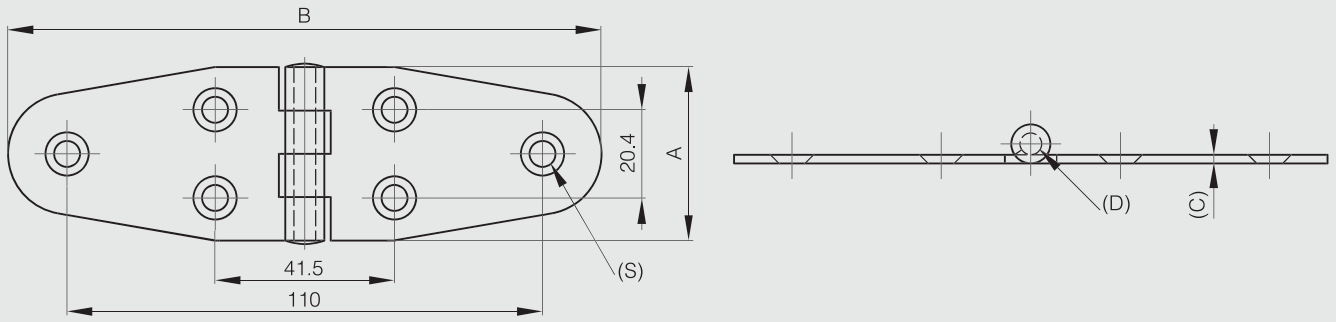

Small butt hinge with one cranked leaf 50 mm

304 stainless steel pin.
For door thickness max. 11 mm.

Part number	Material	Finish	A	B	C	D	E	S	Weight (g)
62-1-3300	430 stainless steel	polished	50	28.5	1	3	12	4	20

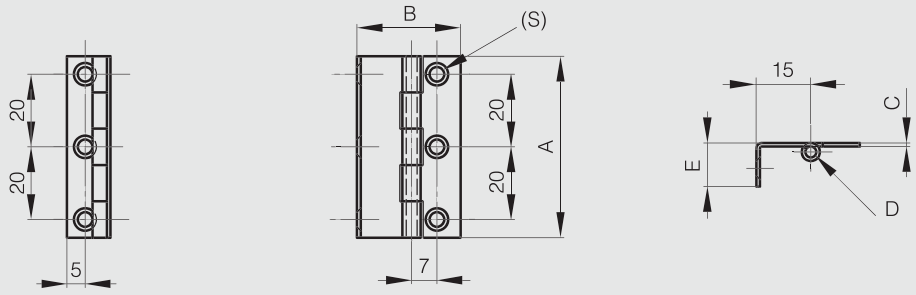

Small butt hinge with one cranked leaf and removable pin 50 mm

Removable pin.
Door thickness: max. 20 mm.

Part number	Material	Finish	A	B	C	D	E	S	Weight (g)
62-1-3301	430 stainless steel	polished	50	44.8	1.2	3	19	4.8	33

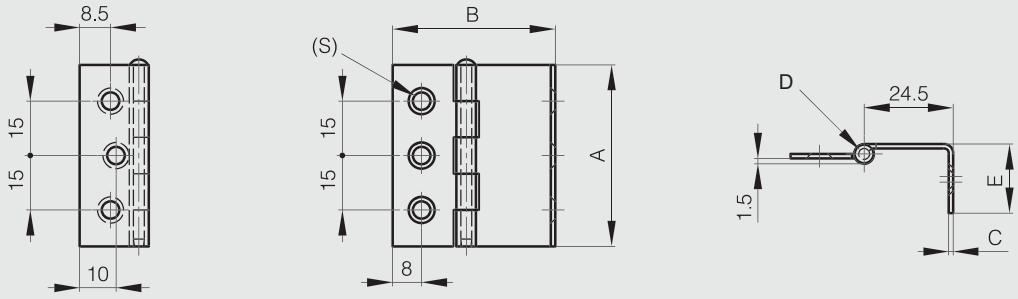

Small butt hinges with one cranked leaf 38 mm

Part number	Material	Finish	A	B	C	D	E	F	G	S	Pin material	Weight (g)
62-1-3628	316L stainless steel	raw	38	15	1.5	3	14	31	17	4.5	316L stainless steel	26

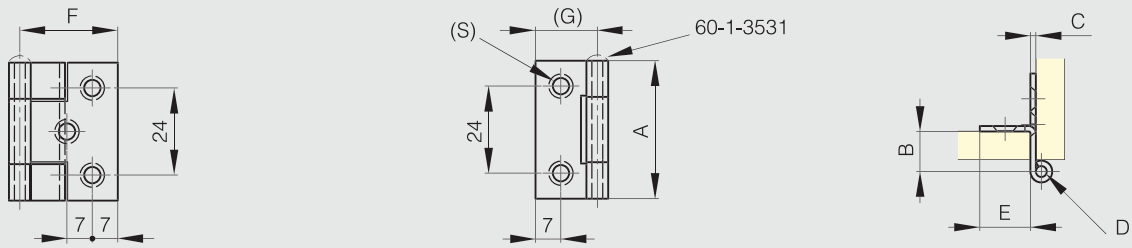

Small butt hinge with one cranked leaf 60 mm

The same hinge is available with a spring (part number 71-1-3622).

Part number	Material	Finish	A	B	C	D	S1	S2	Weight (g)
62-1-3625	316L stainless steel	brightened	60	30	1.5	3	4.2	5	40

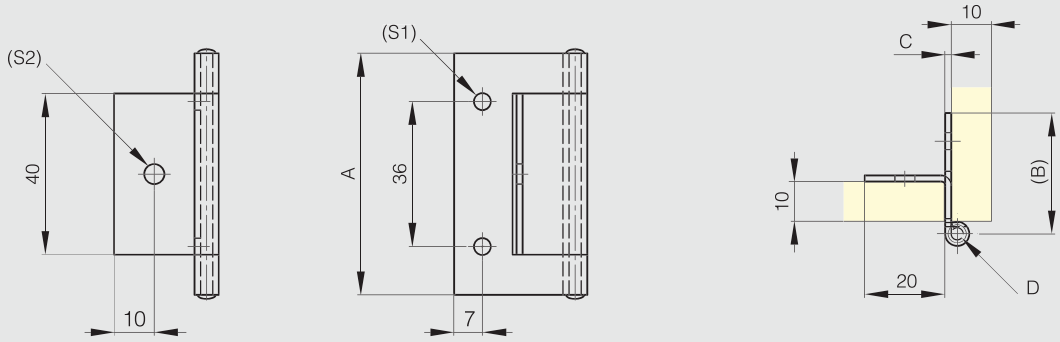

Small butt hinge with one cranked leaf 66 mm

The same hinge is available with a spring (part number 71-1-3649).
Pin in 316 stainless steel.

Part number	Material	Finish	A	B	C	D	S	Weight (g)
62-1-3637	316 stainless steel	brightened	66	22.5	1.5	4	4	42

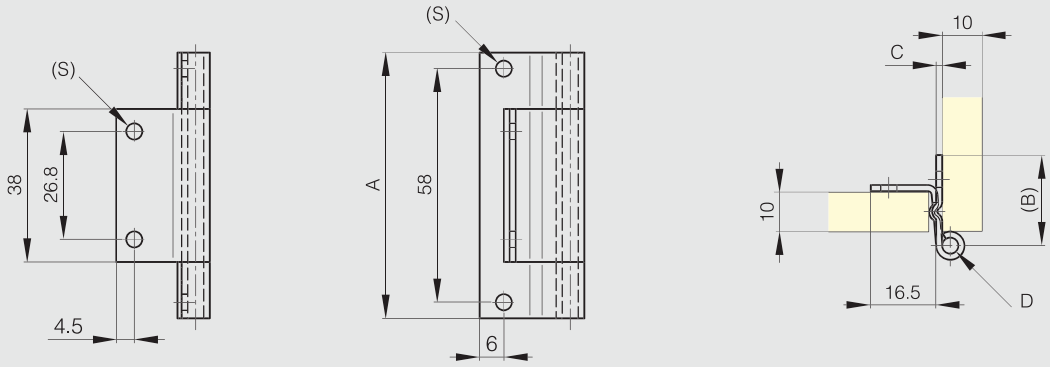

Pin hinge with one cranked leaf

Produced mainly in stainless steel, for a complete description of the materials contact us.

Part number	Material	Finish	A	B	C	D	E	S	Note	Weight (g)
12-1-3682	304 stainless steel	raw	60	72	2	5	30	4	type 2	70
12-1-3683	304 stainless steel	raw	60	72	2	5	30	4	type 1	70

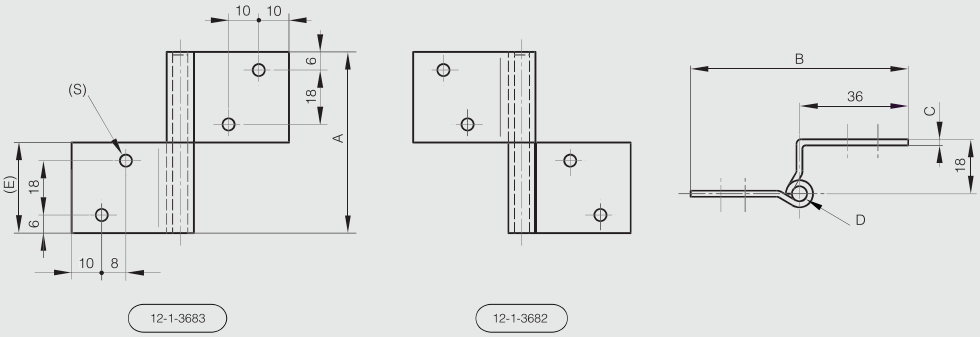

Stainless steel hinge with removable pin

Removable pin.

Part number	Material	Finish	A	B	C	D	Weight (g)
52-1-3877	304 stainless steel	brightened	60	94.5	1.5	4	50

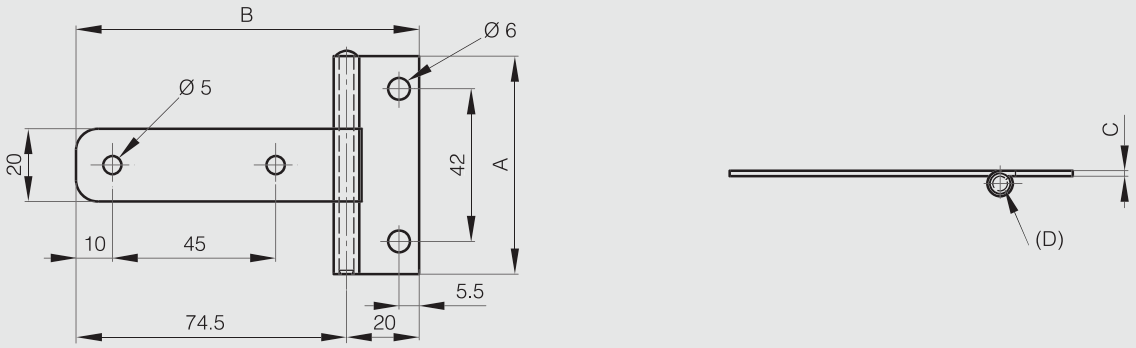

Removable pin hinges with nylon washers

Nylon washers.
Produced mainly in stainless steel, for a complete description of the materials contact us.

Part number	Material	Finish	A	B	C	D	E	S	Note	Weight (g)
52-1-3605	304 stainless steel	raw	112	136.5	2.5	5	63.5		undrilled	248
52-1-3606	304 stainless steel	raw	112	136.5	2.5	5	63.5	7	drilled	248

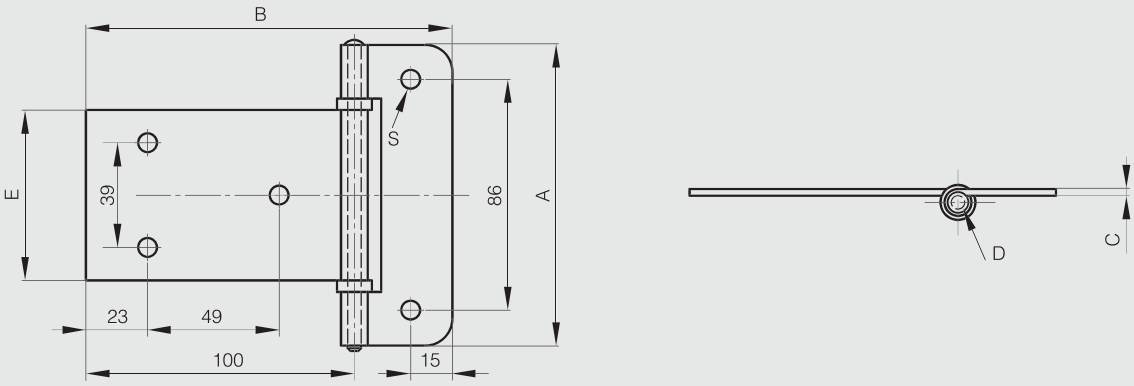

Hinges 62 x 74 mm

Part number	Material	Finish	A	B	C	D	Weight (g)
52-1-3769	304 stainless steel	raw	62	74	2	4.9	60

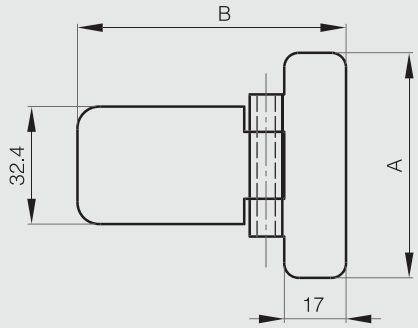

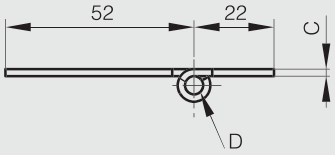

Hinge 20 x 65 mm

Part number	Material	Finish	A	B	C	D	S	Weight (g)
52-1-4013	304 stainless steel	raw	20	65	1	2	4	11

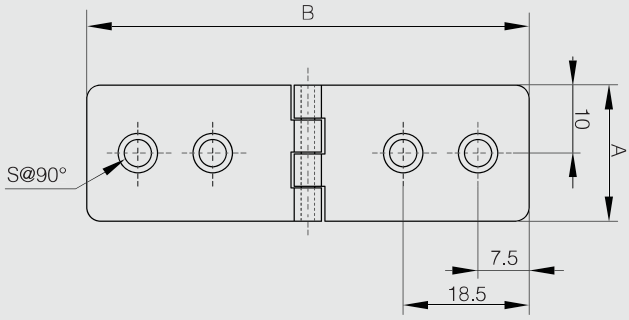

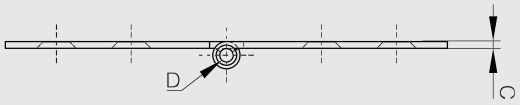

Flag hinge without washer with two offset leaves

Part number	Material	Finish	A	B	C	D	E	Weight (g)
12-1-3769	304 stainless steel	raw	60	40	1.5	5.3	30	38
12-1-3770	304 stainless steel	raw	80	48	2	6	40	74

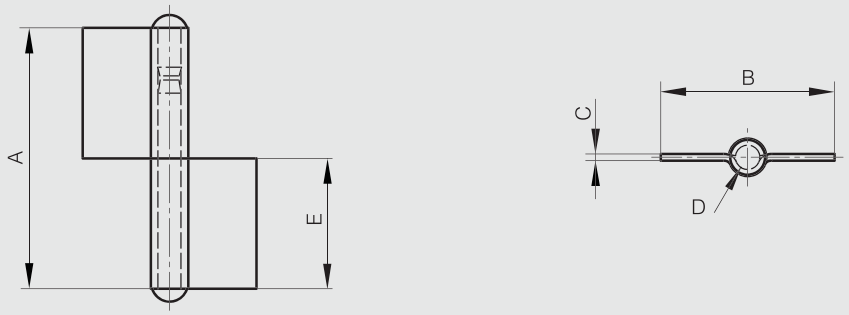

Flag hinge with washer with two offset leaves

Flag hinge with brass washer, included separately.
Produced mainly in stainless steel, for a complete description of the materials contact us.

Part number	Material	Finish	A	B	C	D	E	Weight (g)
12-1-3771	304 stainless steel	raw	61.5	40	1.5	5.3	30	39
12-1-3772	304 stainless steel	raw	81.5	48	2	5.8	40	75

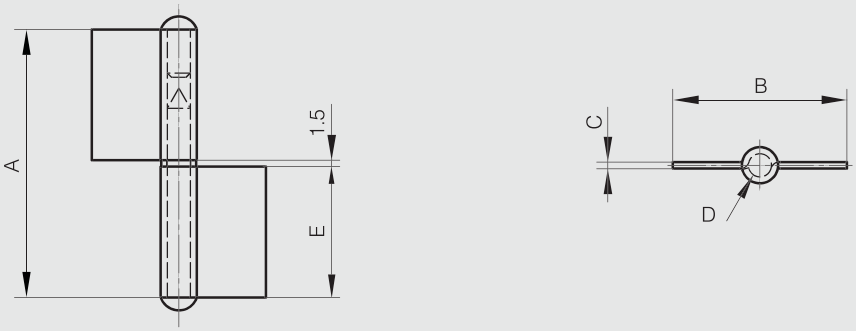

Flag hinge without washer - drilled - flat knuckle

Part number	Material	Finish	A	B	C	D	Note	Weight (g)
12-1-4258	304 stainless steel	raw	80	48	2	6	type 1	76
12-1-4285	304 stainless steel	raw	80	48	2	6	type 2	76

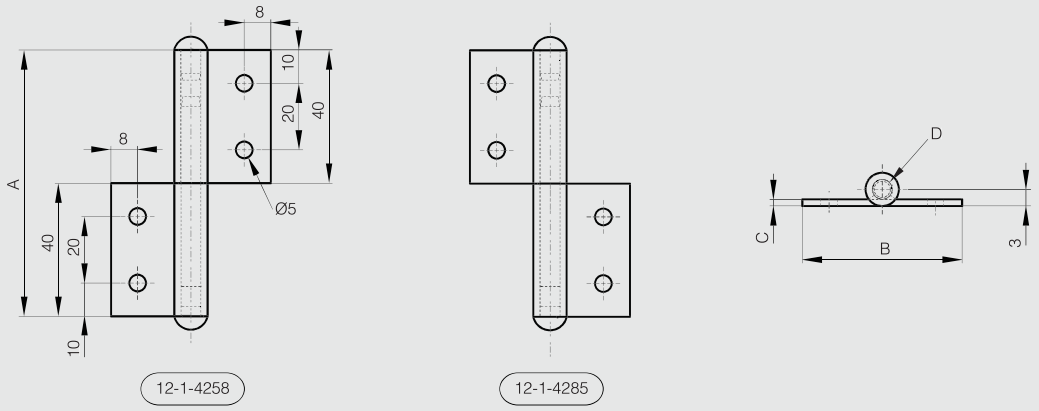

Glass door hinge in brushed stainless steel

180° STAINLESS STEEL RoHS

Door thickness: 10 mm min.
Door weight: max. 10 kg / pair.

Supplied with EPDM gasket.
Included stainless steel bolts and stainless steel washers. Produced mainly in stainless steel, for a complete description of the materials contact us.

Part number	Material	Finish	A	B	C	D	Weight (g)
52-1-4040	304 stainless steel	brushed	40	35	2	4	80

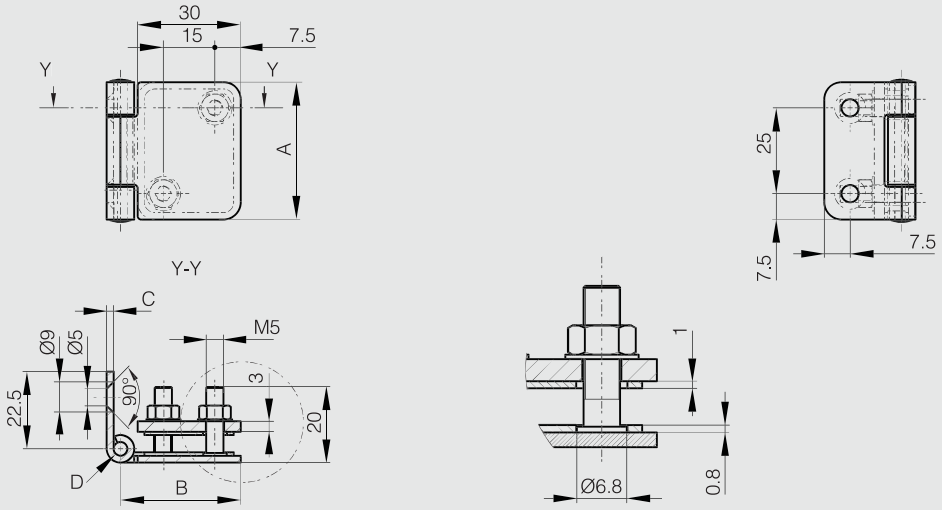

Glass door hinge in stainless steel

180° STAINLESS STEEL

Hinge for glass / acrylic doors (PMMA).
Door thickness: 4 - 6 mm.
Door weight: max. 4 kg / pair.
Leaves, pin and screw in 304 stainless steel. Plate in aluminium alloy, washer in chloroethylene.
Produced mainly in stainless steel, for a complete description of the materials contact us.

Part number	Material	Finish	A	B	C	D	Weight (g)
72-7-4254	304 stainless steel	raw	34	32	1.2	5	21

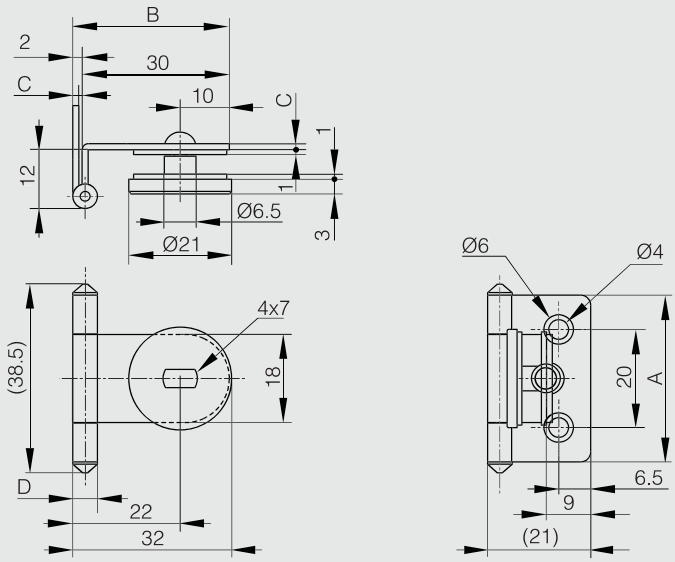

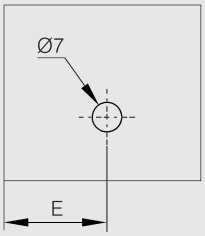

Glass thickness	E
4	19
5	18
6	17

Slam latch in stainless steel - bolt “nose-up”

Stainless steel slam latch.

Part number	Material	Finish	A	B	C	D	E	F	G	H	K	S	Weight (g)
16-1-4265	304 stainless steel	raw	56	73.5	2.7	1.2	20	22	30	29.7	12	5.5	87

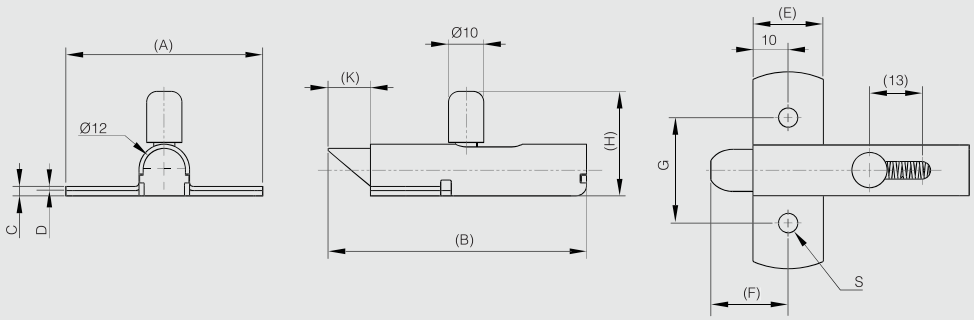

Slam latch in stainless steel - bolt “nose-down”

Stainless steel slam latch.

Part number	Material	Finish	A	B	C	D	E	F	G	H	K	S	Weight (g)
16-1-4282	304 stainless steel	raw	56	73.5	2.7	1.2	20	22	30	29.7	12	5.5	87

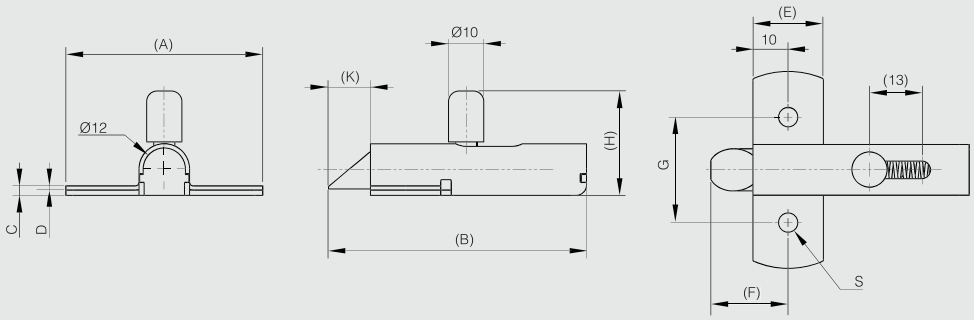

Springloaded bolt - reversible bolt

STAINLESS STEEL RoHS

Slam blot - reversible.
Bolt can be manually unassembled to be positioned 'nose-up' or 'nose-down'.
Minimum load 50 N for full bolt travel.

Part number	Material	Finish	A	B	C	K	Note	Weight (g)
16-7-3835	304 stainless steel	raw	63.2	57	17.2	7	bolt delivered 'nose-down'	185

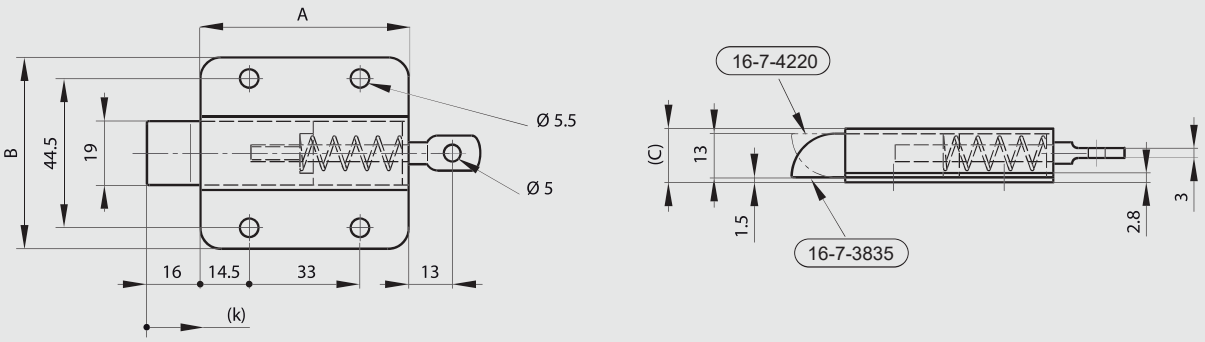

Paddle latches 68.5 x 84 mm

STAINLESS STEEL

Available with or without key.
Keyed alike for version with cylinder.
Spring in stainless steel.

Part number	Material	Finish	A	B	Note	Weight (g)
16-1-4107	304 stainless steel	raw	68.5	84	without key	184
16-1-4108	304 stainless steel	raw	68.5	84	with key	184

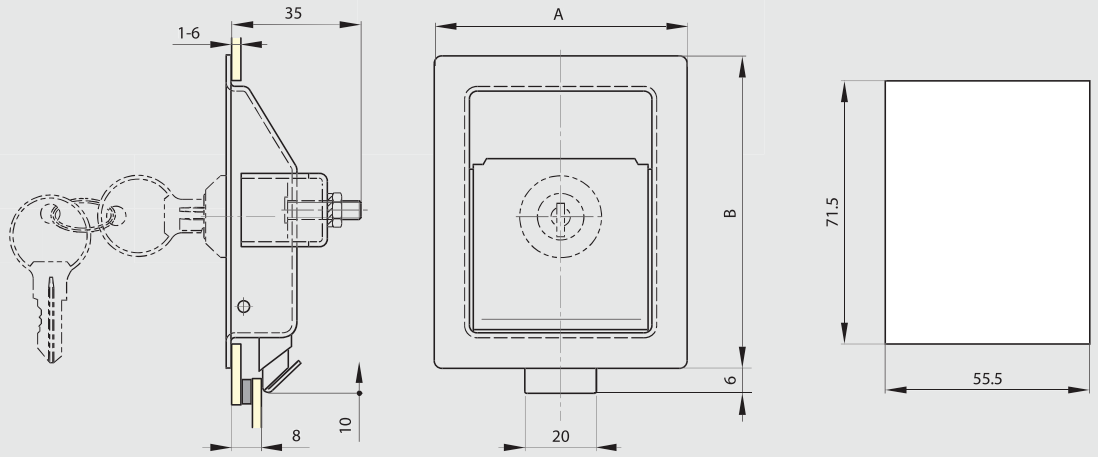

Concealed springloaded pin hinges A

Stainless steel spring.
304 stainless steel pin for hinges in stainless steel.
Circlip in 1.4122 stainless steel.

Part number	Material	Finish	A	B	C	D	K	Note	Weight (g)
12-1-3858	304 stainless steel	raw	82	18.2	2.8	6	12	type 2	46
12-1-3859	304 stainless steel	raw	82	18.2	2.8	6	12	type 1	46

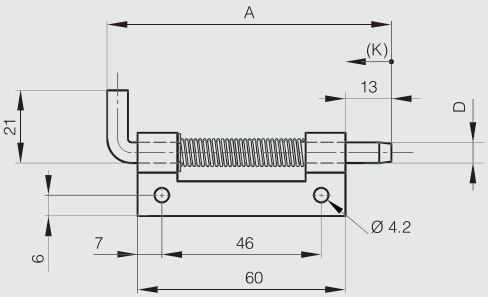

12-1-3857 & 12-1-3855 & 12-1-3859

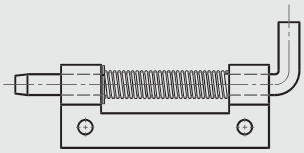

12-1-3856 & 12-1-3854 & 12-1-3858

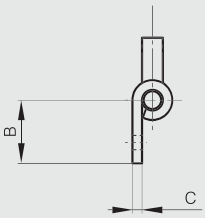

Concealed springloaded pin hinges B

Stainless steel spring.
304 stainless steel pin for hinges in stainless steel.
Circlip in 1.4122 stainless steel.

Part number	Material	Finish	A	B	C	D	K	Note	Weight (g)
12-1-3862	304 stainless steel	raw	82	21	14	5	12	type 2	39
12-1-3863	304 stainless steel	raw	82	21	14	5	12	type 1	39

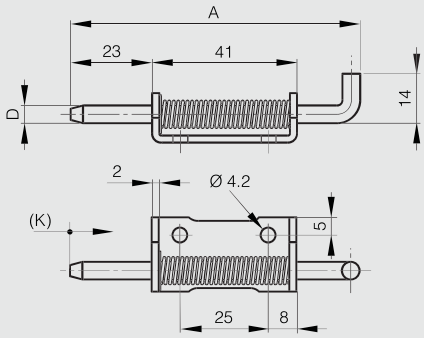

12-1-3951 & 12-1-3861 & 12-1-3863

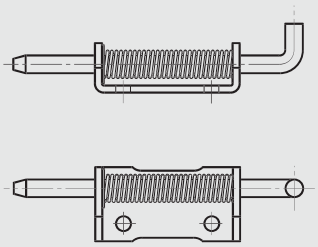

12-1-3950 & 12-1-3860 & 12-1-3862

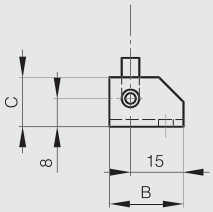

Springloaded bolt with locking system B

Heavy duty range. Stop when open.

Part number	Material	Finish	A	B	K	Weight (g)
16-1-9025	304 stainless steel	raw	132	50	17	170

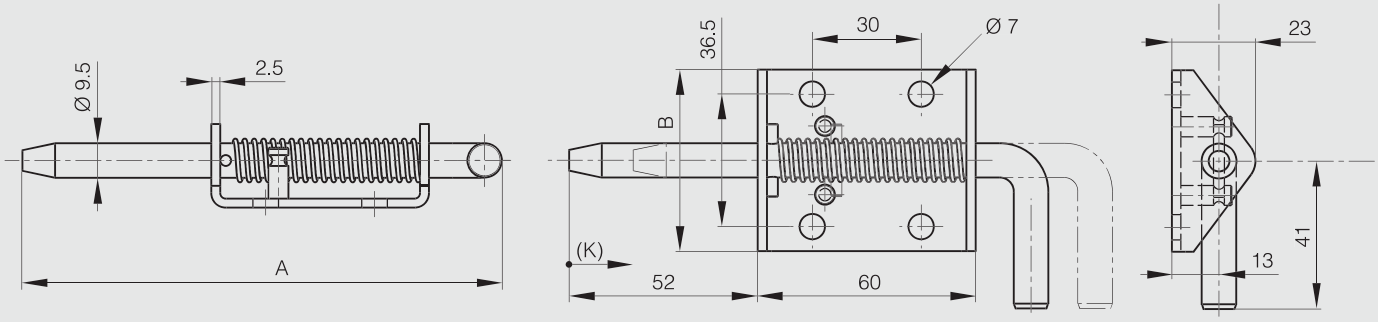

Push barrel bolt

Stainless steel latch with steel shaft and plastic button.
Produced mainly in stainless steel, for a complete description of the materials contact us.

Part number	Material	Finish	A	B	C	Weight (g)
16-1-9008	304 stainless steel	raw	64	33.5	15	44

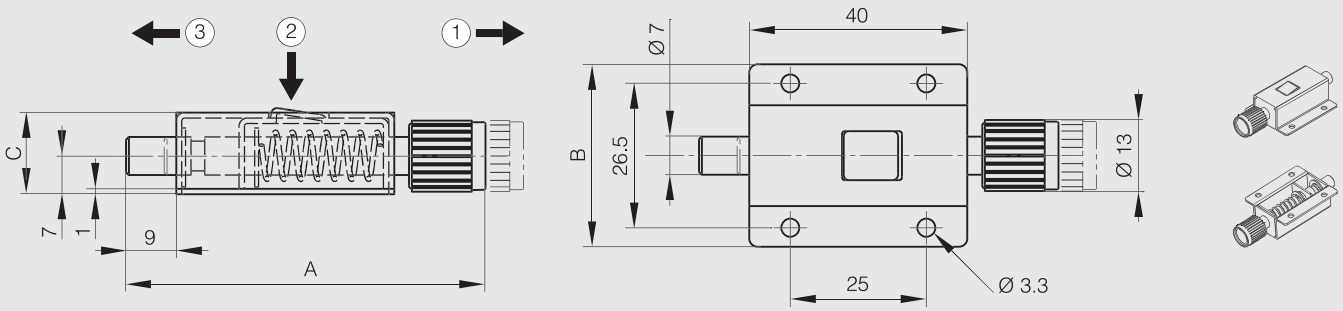

Budget latch - square 6x6 - stainless steel

Not handed.

Part number	Material	Finish	A	B	C	W	Weight (g)
16-1-3972	304 stainless steel	raw	85	17	8.5	90°	56

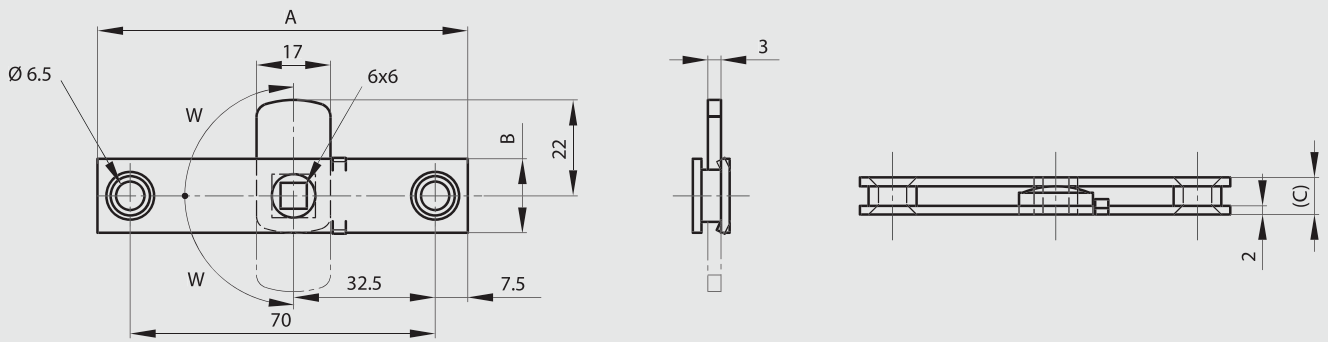

Budget latches - square 8x8

Not handed. 3 indent positions.

Part number	Material	Finish	A	B	C	W	Weight (g)
16-1-4086	304 stainless steel	raw	80	19	8	90°	63

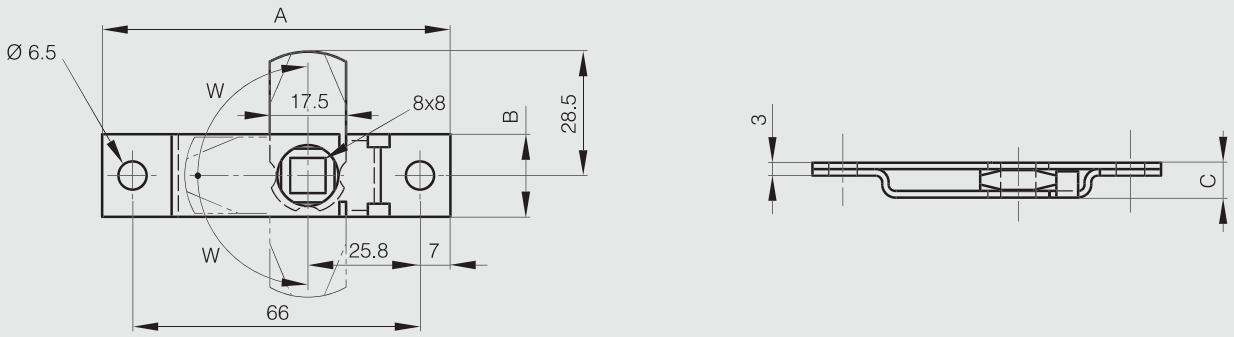

Spring budget latch

Not handed.

Part number	Material	Finish	A	B	C	Note	Weight (g)
16-1-4031	304 stainless steel	deburred	85	53.4	8.5	Budget latch (no strike)	69

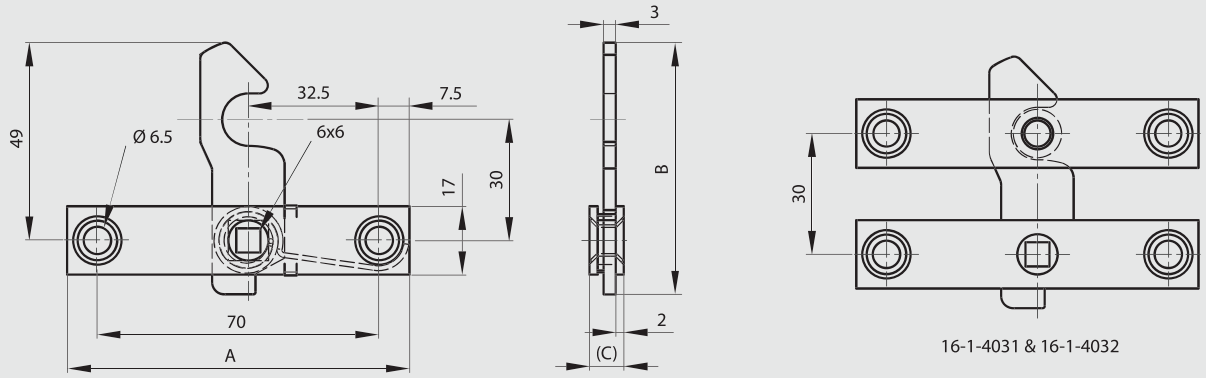

Strike for spring budget latch 16-1-4031

Part number	Material	Finish	A	B	C	Note	Weight (g)
16-1-4032	304 stainless steel	deburred	85	17	8.5	strike	48

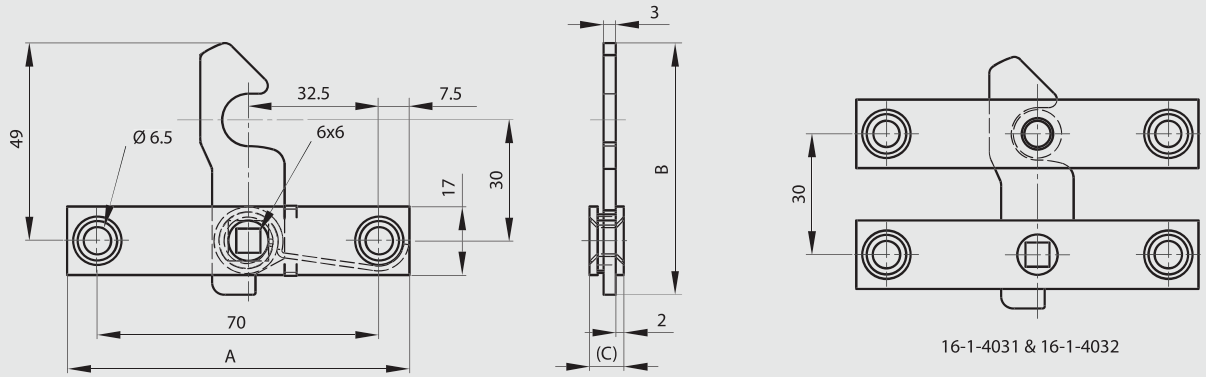

Heavy duty budget latch - square 8x8

Not handed. 3 indent positions.

	Part number	Material	Finish	A	B	C	W	Weight (g)
NEW	16-1-4330	304 stainless steel	raw	115	35	11	90°	160

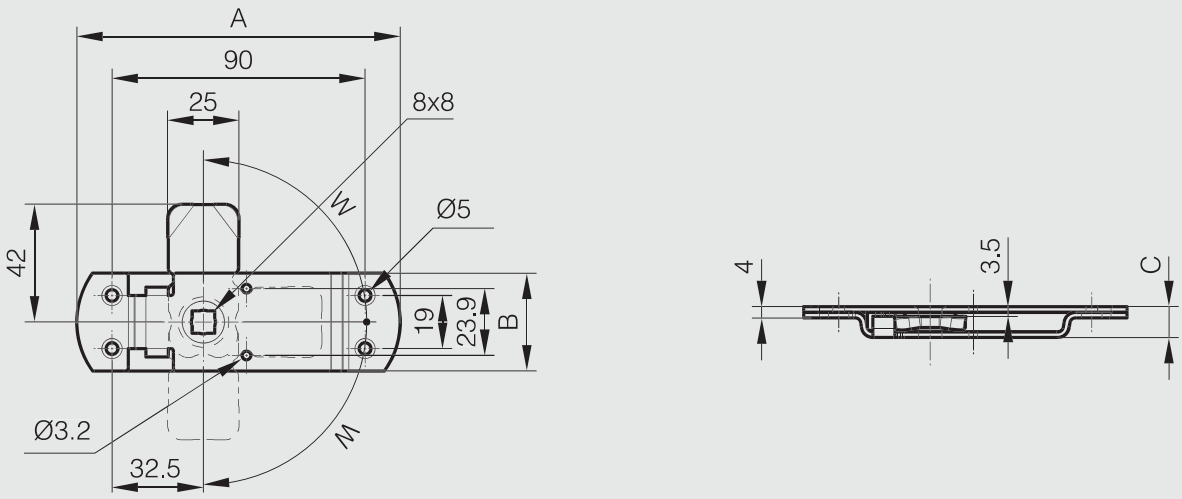

Barrel bolt in stainless steel

STAINLESS STEEL

Can be fixed in vertical or horizontal position (stop when locked).
Supplied with 2 different strikes (see drawing).

Part number	Material	Finish	A	B	C	Weight (g)
16-7-3863	304 stainless steel	satin	50	37	27	80

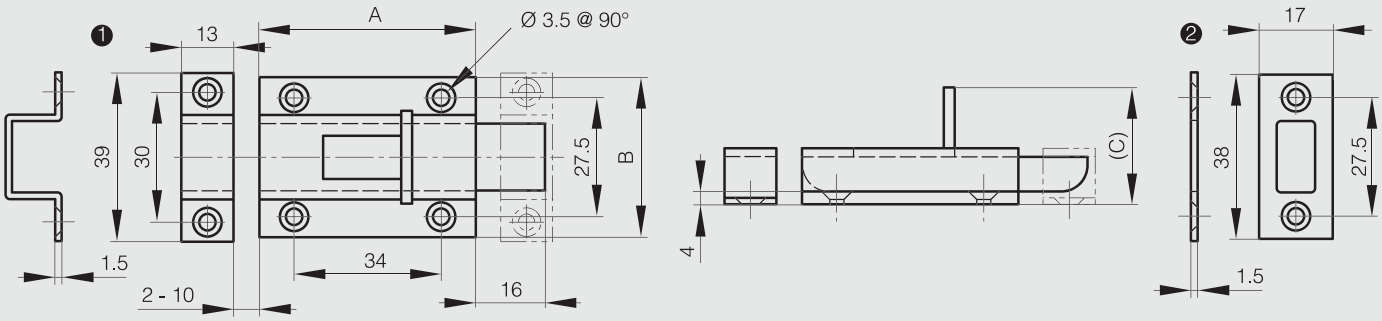

Stainless steel dual ball catches

Catch force is not adjustable. Do not turn the slot part.

Part number	Material	Finish	A	B	C	C1	C2	D	E	F	G	H	J	K	L	S	Force	Weight (g)
16-7-4305	316 stainless steel	polished	43	8	13.5	10	6	28.4	2.5	35	16	25	7.5	11	2.5	3.2	1.3kg	18
16-7-4306	316 stainless steel	polished	50	10	16.1	12.2	7.7	31.5	2.9	40	20	30	9	13.2	2.9	4.2	1.8kg	30
16-7-4307	316 stainless steel	polished	70	13	23	17	10.5	51	4	60	30	42	10.5	19	4	4.2	3.9kg	83

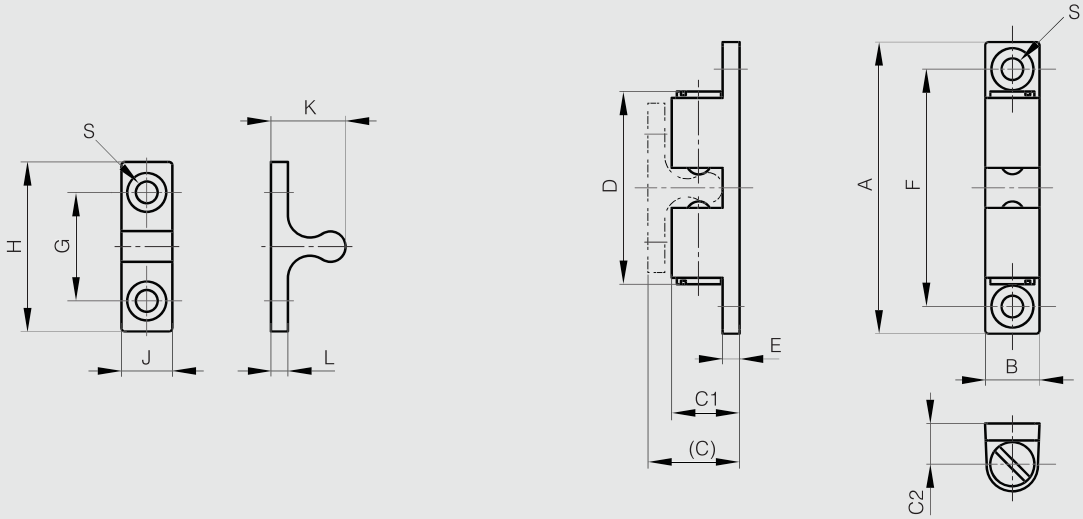

Compact magnetic catch

STAINLESS STEEL RoHS

Suitable for temperatures below 80°C.
To avoid breakage, counterplate should not contact the magnet.
Screw heads should not protude above the base plate.
Magnet is coated with acrylic resin to be corrosion resistant.

Part number	Material	Finish	A	B	C	Force	Weight (g)
16-7-4309	430 stainless steel	polished	41	16.5	2.8	5kg	13

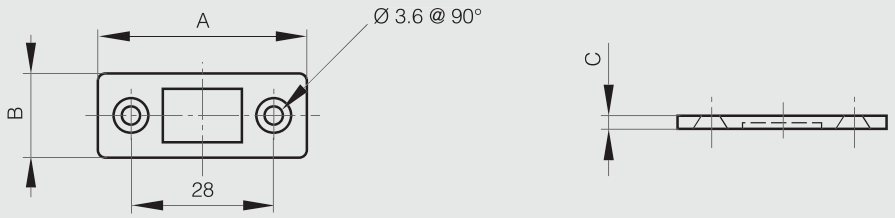

Screw-on magnetic catch without counter plate - force 14 kg

STAINLESS STEEL RoHS

Strong magnetic force.
Material: 304 stainless steel / steel / neodymium.
Counter plate not included.
Produced mainly in stainless steel, for a complete description of the materials contact us.

Part number	Material	Finish	A	B	C	D	Force	Weight (g)
16-7-4297	304 stainless steel	polished	50	17	12.3	40	14kg	41

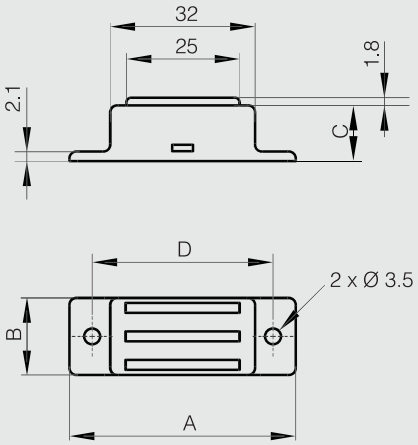

Screw-on magnetic catch without counter plate - force 7 and14 kg - high temperature resistance

STAINLESS STEEL RoHS

Suitable for high temperature environments up to 250°C.
Strong magnetic force. Corrosion free.
Counter plate not included.

Part number	Material	Finish	A	B	C	D	Force	Weight (g)
16-7-4294	304 stainless steel	polished	50	17	12.3	40	7.1kg	40
16-7-4295	304 stainless steel	polished	50	17	12.3	40	14.3kg	40

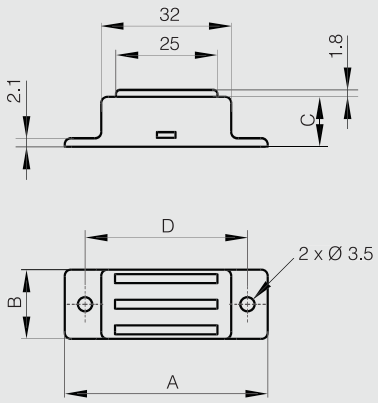

Rotary toggle latches

Strike included.

Part number	Material	Finish	A	B	C	Note	Weight (g)
16-1-9013	304 stainless steel	raw	62	38	13.2	with strike	50

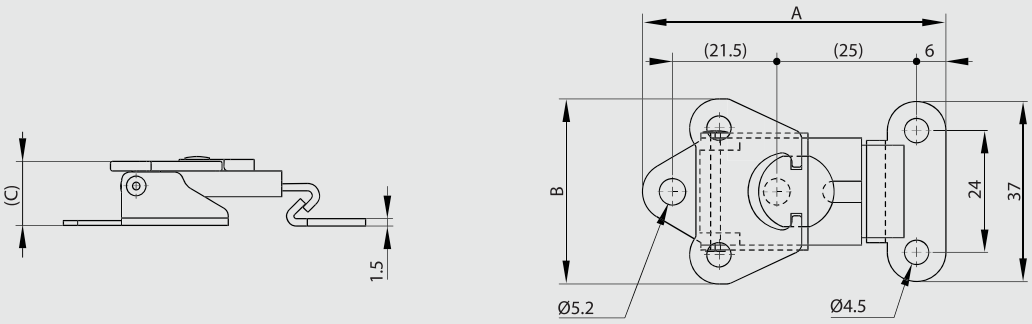

Spring loaded rotary toggle latches

Strike included.

Part number	Material	Finish	A	B	C	Note	Weight (g)
16-1-9015	304 stainless steel	raw	62	46	12	with strike	60

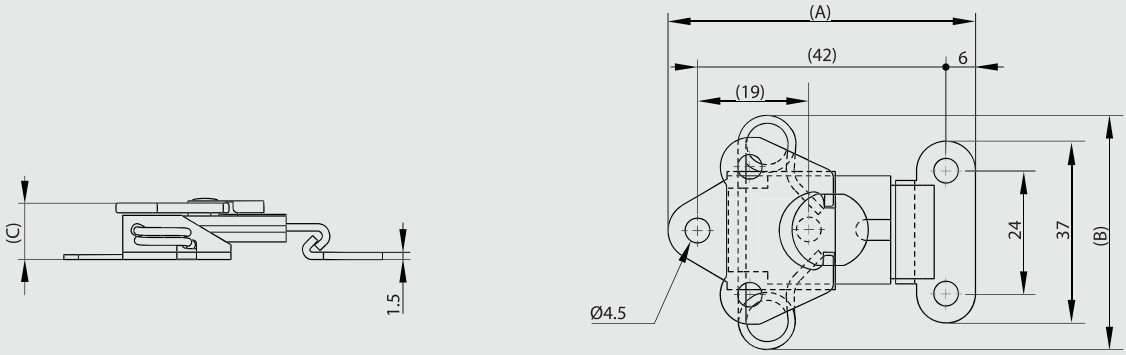

Padlockable rotary toggle latches

Strike included.

Part number	Material	Finish	A	B	C	Note	Weight (g)
16-1-9017	304 stainless steel	raw	64	38	24	with strike	60

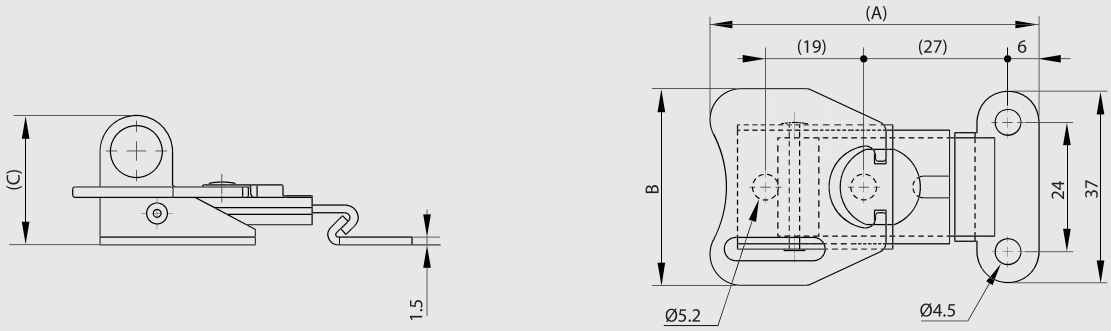

Lockable toggle latch without strike

Keyed alike (2 identical keys).
Strike not included.
For part number 16-1-4257: with dust shutter.

Part number	Material	Finish	A	B	C	Weight (g)
16-1-4257	304 stainless steel	raw	106.5	40	17	132

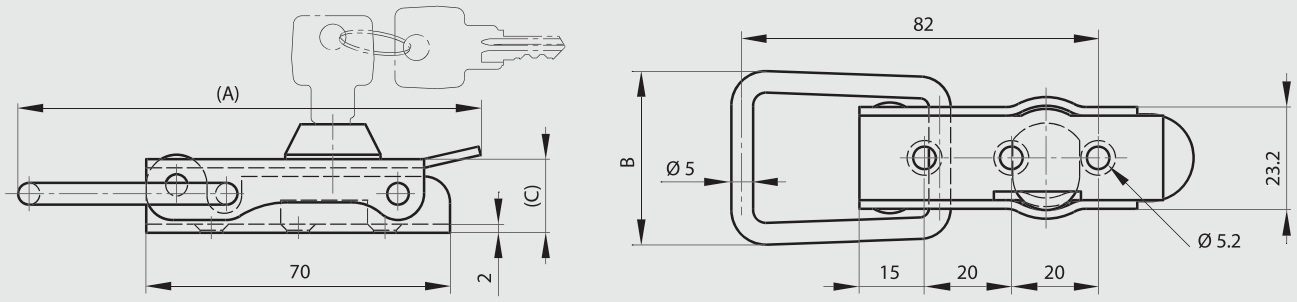

Strike for part number 16-1-4257

Part number	Material	Finish	A	B	Weight (g)
16-7-3601	304 stainless steel	raw	28	25	24

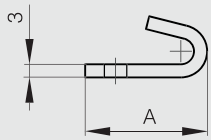

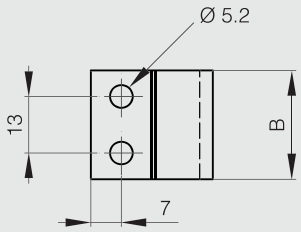

Toggle latches without strike - 50 mm

These latches are used with strike part numbers 16-7-3529 and 16-7-3531.
Padlockable option available for part number 16-7-3394.

Part number	Material	Finish	A	B	C	Note	Weight (g)
16-7-3525	304 stainless steel	raw	50	22	12.5	drilled	20
16-7-3527	304 stainless steel	raw	50	23.4	11.7	undrilled	20

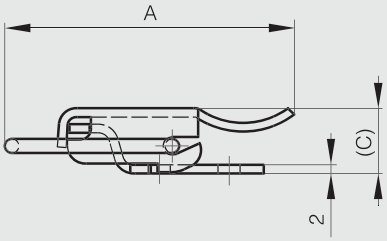

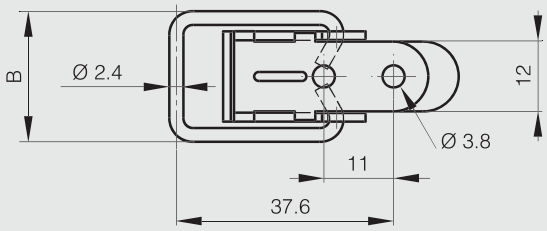

Strikes for part numbers 16-7-3525 and 16-7-3527

STAINLESS STEEL RoHS

Part number	Material	Finish	A	B	C	D	E	Note	Weight (g)
16-7-3531	304 stainless steel	raw	13.4	24	1.5			undrilled	4
16-7-3529	304 stainless steel	raw	13.4	24	1.5	14	5	drilled	4

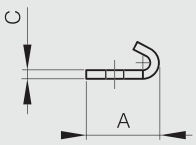

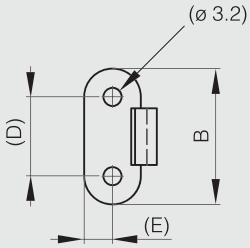

Toggle latch with strike - 52 mm

STAINLESS STEEL RoHS

Part number	Material	Finish	A	B	C	Weight (g)
16-7-3846	304 stainless steel	raw	52	41	13.5	23

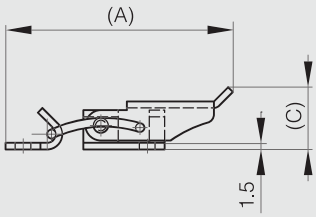

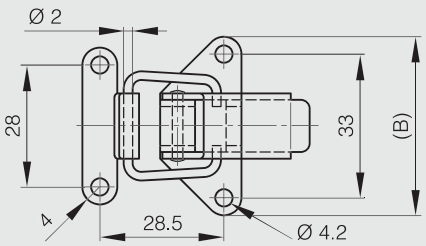

Toggle latches without strike - 58.1 mm

This latch is used with strike, part number 16-7-3874.

Part number	Material	Finish	A	B	C	Weight (g)
16-7-3876	304 stainless steel	raw	58.1	23.4	12.7	32

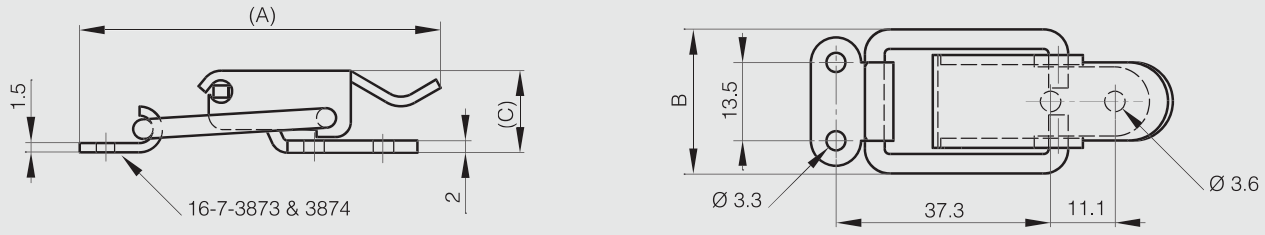

Strike for part number 16-7-3876

Part number	Material	Finish	Weight (g)
16-7-3874	304 stainless steel	raw	4

Toggle latch without strike - 80.2 mm

The latch is used with strikes part number 16-7-3530.
Latch is available with padlockable option part number 16-7-3724.

Part number	Material	Finish	A	B	C	Note	Weight (g)
16-7-3526	304 stainless steel	raw	80.2	32	14.5	drilled	54

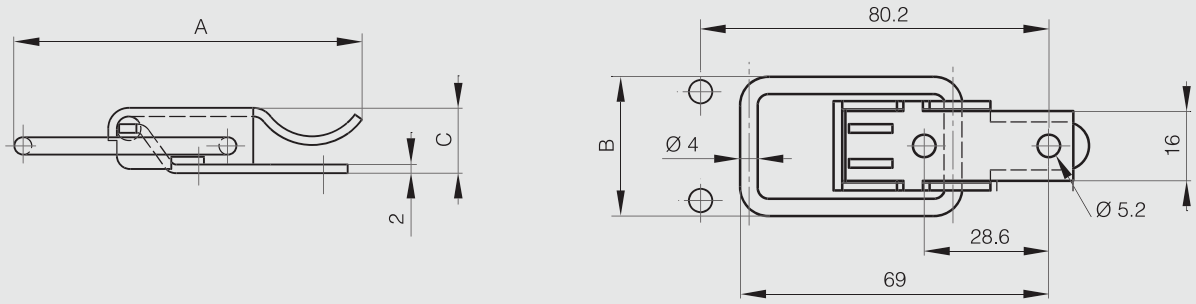

Strike for part number 16-7-3526

Part number	Material	Finish	A	B	C	D	E	Note	Weight (g)
16-7-3530	304 stainless steel	raw	20	26.5	2	15	5.2	drilled	9

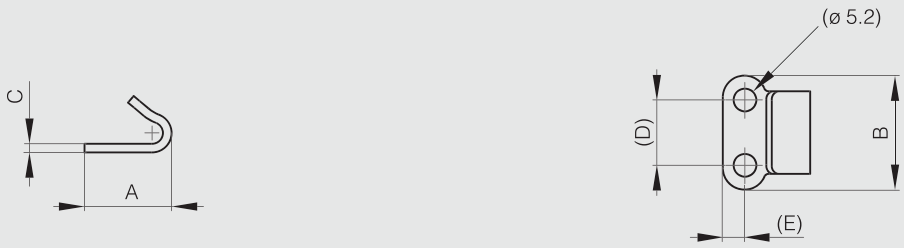

Toggle latch without strike - 88.5 mm

Punched holes.
This latch is used with strike part number 16-7-3601.

Part number	Material	Finish	A	B	C	Weight (g)
16-7-3829	304 stainless steel	raw	88.5	40	20	106

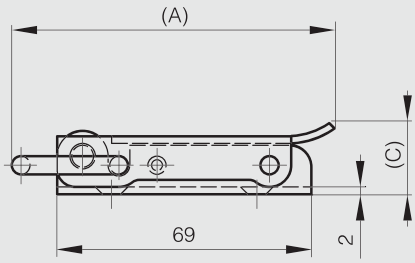

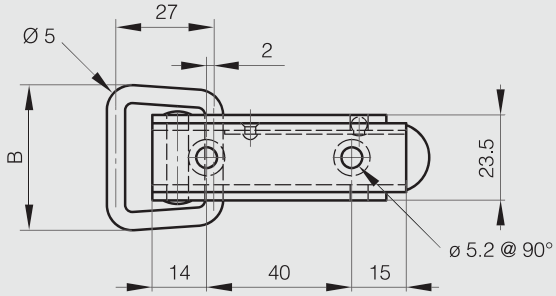

Strike for part number 16-7-3829

Part number	Material	Finish	A	B	Weight (g)
16-7-3601	304 stainless steel	raw	28	25	24

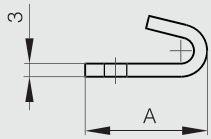

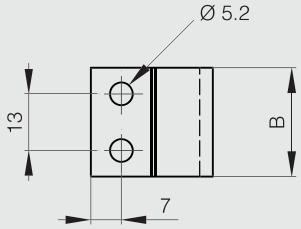

Other strike for part number 16-7-3829

Drilled and countersunk for 4,5 mm diameter screws.

Part number	Material	Finish	A	B	Weight (g)
16-7-3828	304 stainless steel	raw	85	25	57

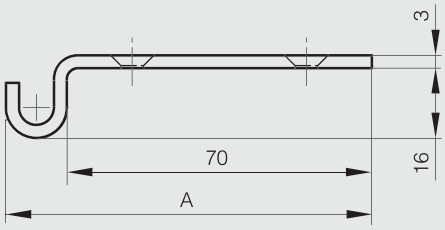

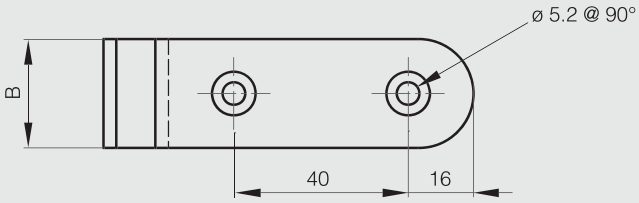

Toggle latch without strike (consistent tension)

This latch is used with strike part number 16-7-3874.

Part number	Material	Finish	A	B	C	Weight (g)
16-7-3891	304 stainless steel	raw	58.6	20.6	12.7	27

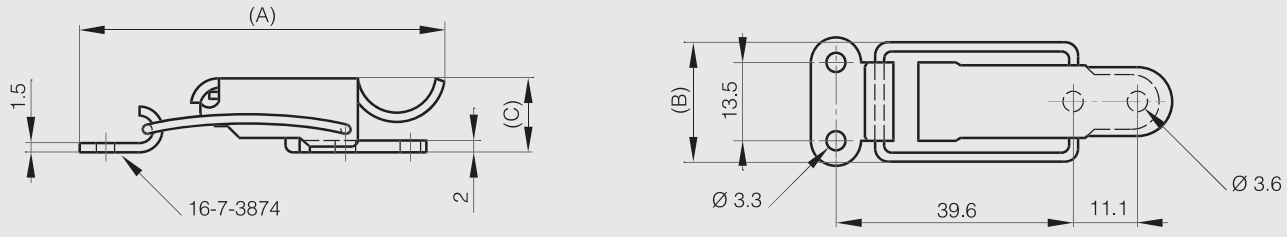

Strike for part number 16-7-3891

Part number	Material	Finish	Weight (g)
16-7-3874	304 stainless steel	raw	4

Padlockable toggle latch - 80.2 mm

This latch is used with strike part number 16-7-3730.

Part number	Material	Finish	A	B	C	Note	Weight (g)
16-7-3724	304 stainless steel	raw	80.2	32	23.5	drilled	55

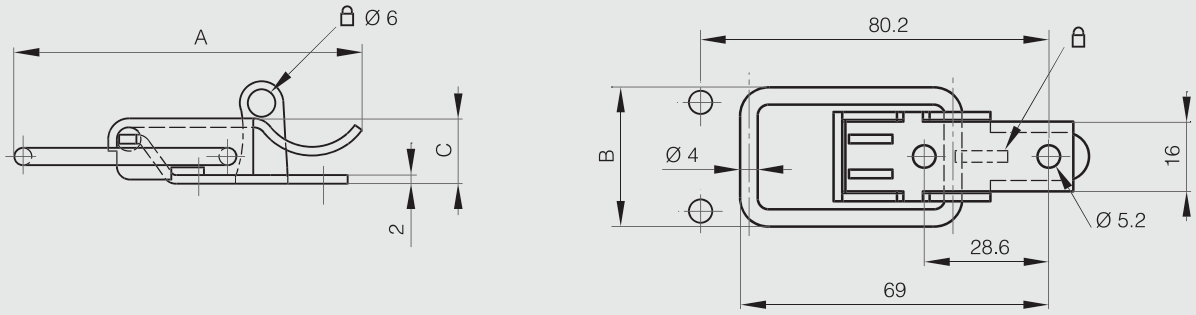

Strike for part number 16-7-3724

Part number	Material	Finish	A	B	Note	Weight (g)
16-7-3730	304 stainless steel	raw	27.4	26	drilled	10

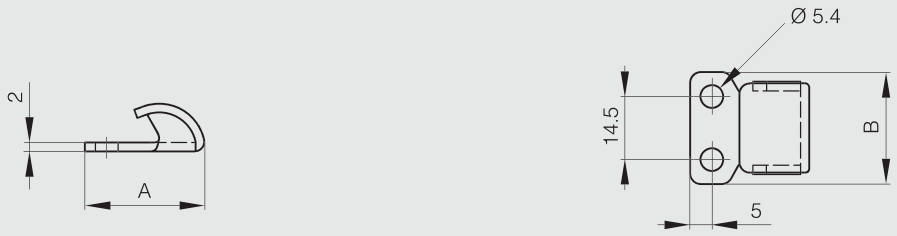

Padlockable toggle latch - 97.6 mm

This latch is used with strike part number 16-7-3885.

Part number	Material	Finish	A	B	C	Weight (g)
16-7-3884	304 stainless steel	raw	97.5	33	23.1	68

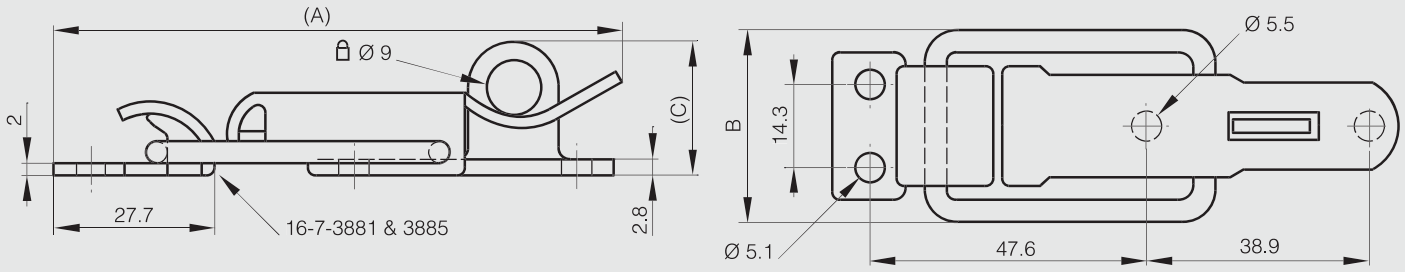

Strike for part numbers 16-7-3884

Part number	Material	Finish	Weight (g)
16-7-3885	304 stainless steel	raw	9

Spring loaded and padlockable toggle latch - 52 mm

Dimension A (52 mm) without tension. Dimension A can be extended up to 3 mm putting the latch under tension.
This latch is used with strike part numbers 16-7-3739 and 16-7-3742.

Part number	Material	Finish	A	B	C	Weight (g)
16-7-3760	304 stainless steel	raw	55.5	34.5	12	32

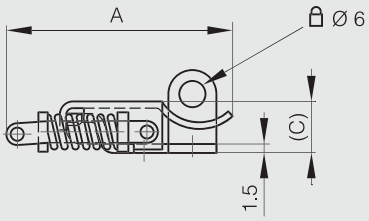

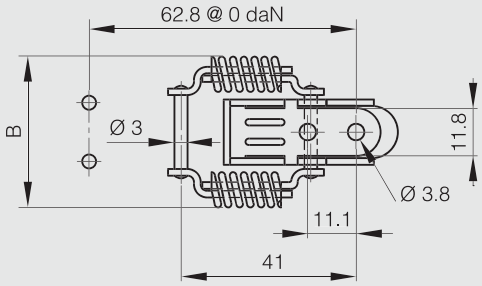

Strikes for part number 16-7-3760

Part number	Material	Finish	A	B	Note	Weight (g)
16-7-3739	304 stainless steel	raw	28.5	20.5	undrilled	4
16-7-3742	304 stainless steel	raw	28.5	20.5	drilled	4

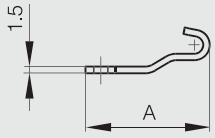

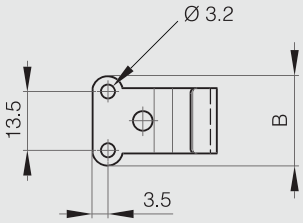

Spring loaded and padlockable toggle latch - 74 mm

Dimension A (74 mm) without tension. Dimension A can be extended up to 4 mm putting the latch under tension.
This latch is used with strike part numbers 16-7-3751 and 16-7-3754.

Part number	Material	Finish	A	B	C	Weight (g)
16-7-3766	304 stainless steel	raw	74	46.5	15	75

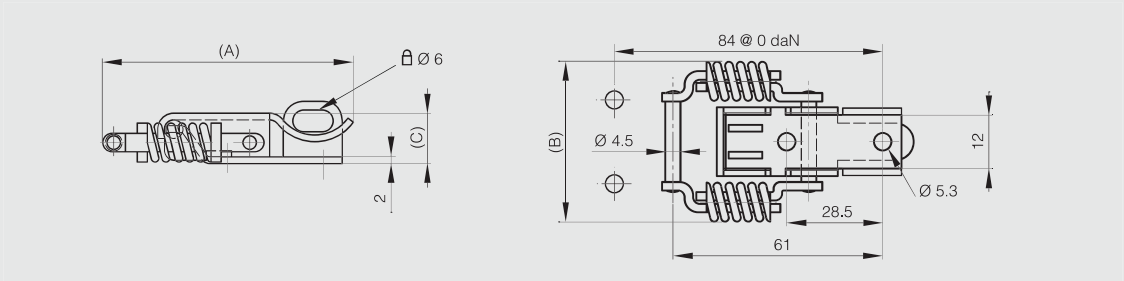

Strikes for part number 16-7-3766

Part number	Material	Finish	A	B	Note	Weight (g)
16-7-3751	304 stainless steel	raw	36	40	undrilled	20
16-7-3754	304 stainless steel	raw	36	40	drilled	20

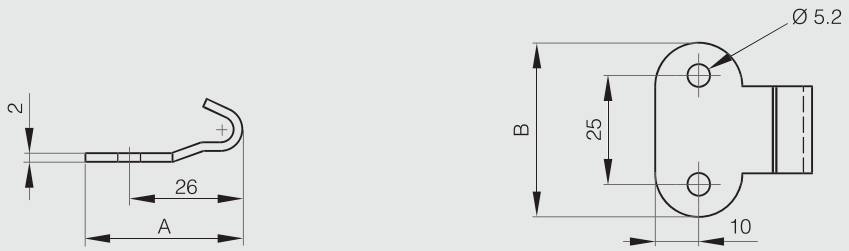

Spring loaded and padlockable toggle latch - 70.9 mm

This latch is used with strike part number 16-7-3916.

Part number	Material	Finish	A	B	C	Weight (g)
16-7-3917	304 stainless steel	raw	70.9	28.7	23.1	50

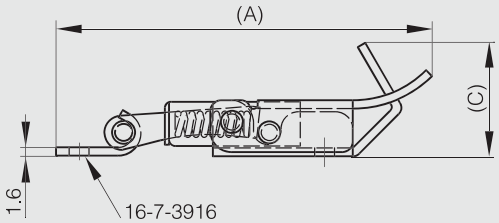

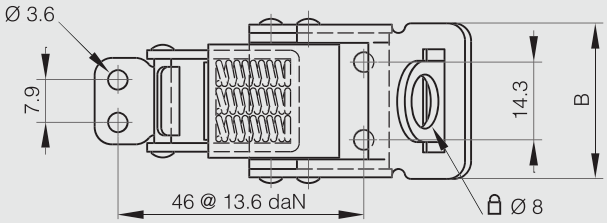

Strike for part number 16-7-3917

Part number	Material	Finish	Weight (g)
16-7-3916	304 stainless steel	raw	5

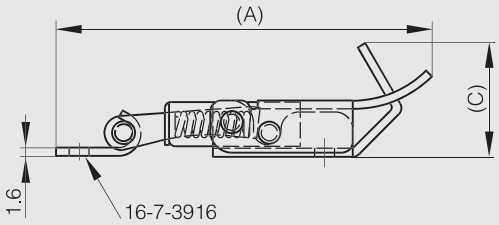

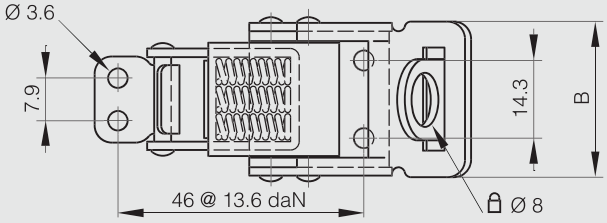

Adjustable toggle latches with strike - padlockable - 82 mm to 118 mm

STAINLESS STEEL RoHS

Part number	Material	Finish	A	B	C	C1	C2	D	E	F	G	H	J	K	L	S	Note	Weight (g)
16-7-4025	304 stainless steel	raw	82	27	19	2	2	4	14	4.5	10	62-72	22	11	14	4	82 < A < 92	48
16-7-4027	304 stainless steel	raw	108	34	17	2.5	3	5	17	6.5	10	85-96	27	16	18	5.2	108 < A < 119	102
16-7-4028	304 stainless steel	raw	118	39	22	3	2.5	6	20	6.5	18	85-96	33	15	20	5.2	118 < A < 129	124

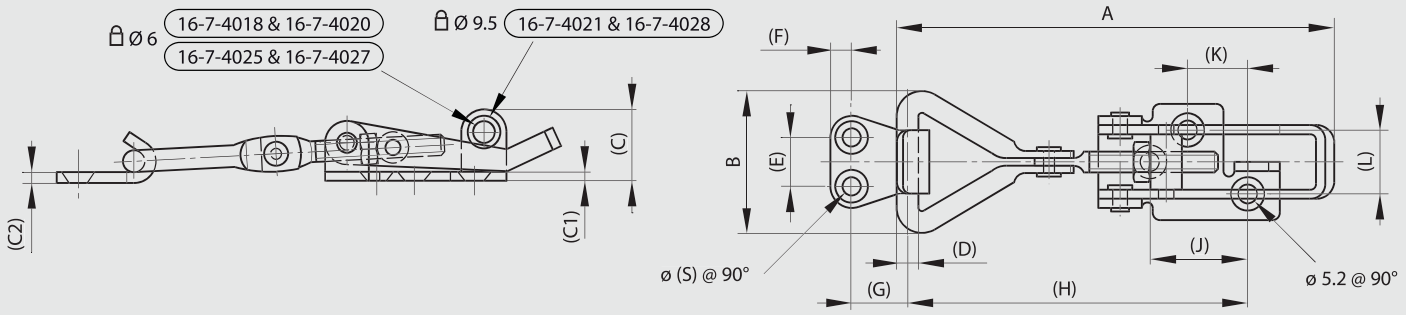

Adjustable toggle latches with strike - padlockable - 174 mm

STAINLESS STEEL RoHS

Part number	Material	Finish	A	B	C	Note	Weight (g)
16-7-4030	304 stainless steel	raw	174	50	27	174 < A < 186	236

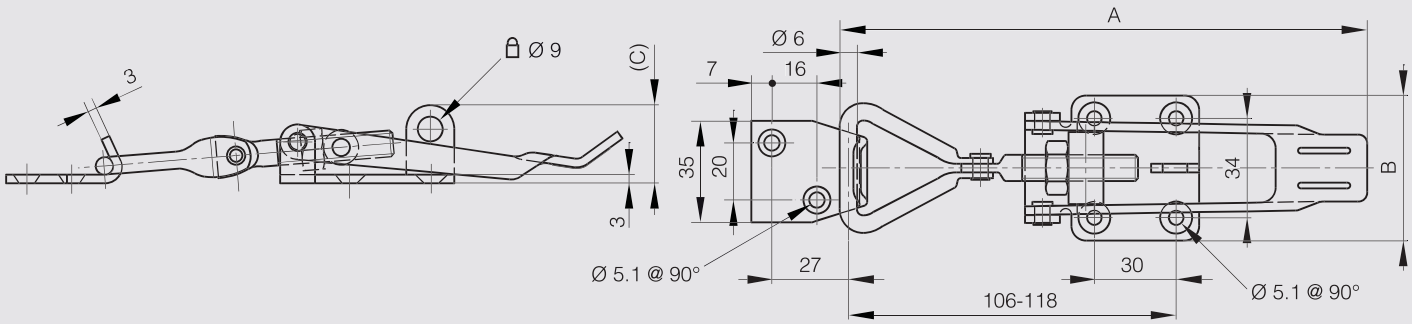

Spring loaded toggle latch without strike 35.8 mm

This small latch is used with strike part number 16-7-3907.

Part number	Material	Finish	A	B	C	Weight (g)
16-7-3906	304 stainless steel	raw	35.8	12.3	7.9	9

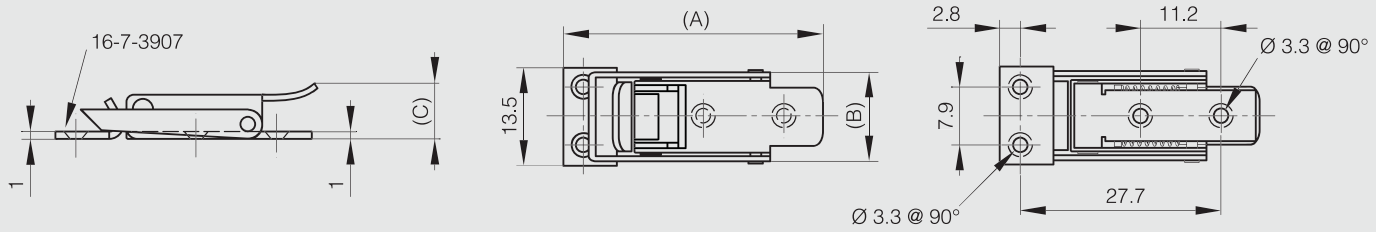

Strike for part number 16-7-3906

Part number	Material	Finish	Weight (g)
16-7-3907	304 stainless steel	raw	5

Spring loaded toggle latches without strike - 70.8 mm

These latches are used with strike part number 16-7-3916.

Part number	Material	Finish	A	B	C	Note	Weight (g)
16-7-3911	304 stainless steel	raw	70.8	28.7	10.2		50
16-7-3920	304 stainless steel	raw	70.8	28.7	10.2	with seal wire hole	50

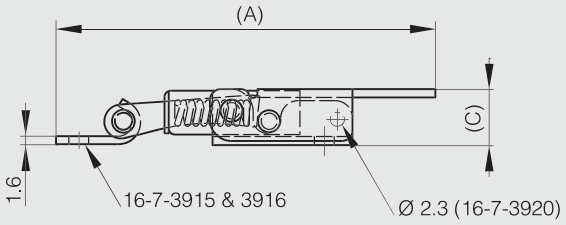

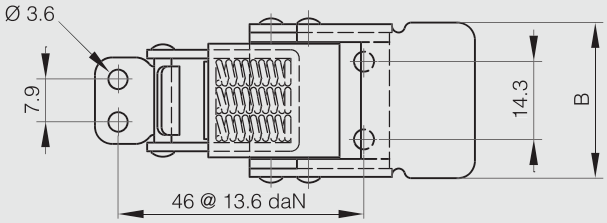

Spring loaded toggle latch without strike - with push button

The push button prevents accidental opening.
This latch is used with strike part number 16-7-3916.
A padlockable option is available for part number 16-7-3917.

Part number	Material	Finish	A	B	C	Note	Weight (g)
16-7-3918	304 stainless steel	raw	70.9	28.7	14.7	with push button to open / no seal wire hole	50

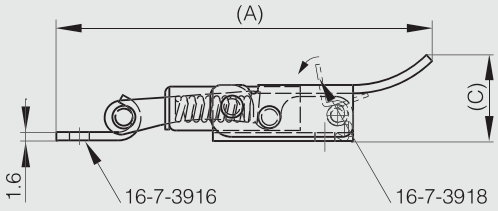

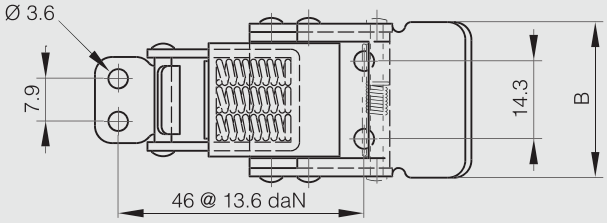

Strikes for part numbers 16-7-3911, 16-7-3918 and 16-7-3920

Part number	Material	Finish	Weight (g)
16-7-3916	304 stainless steel	raw	5

Spring loaded toggle latches without strike - 52 mm

This latch is used with strike part numbers 16-7-3739 and 16-7-3742.
Padlockable option is available for part number 16-7-3760.

Part number	Material	Finish	A	B	C	Weight (g)
16-7-3736	304 stainless steel	raw	55.5	34.5	12	27

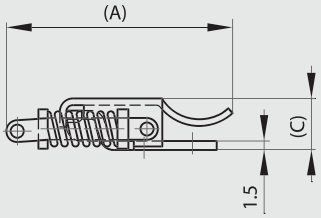

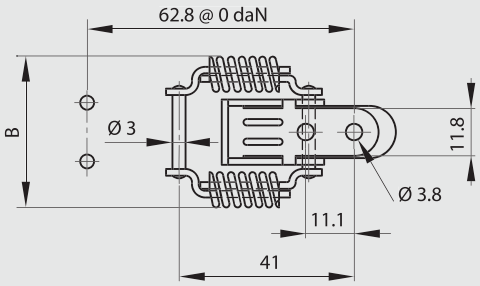

Strikes for part number 16-7-3736

Part number	Material	Finish	A	B	Note	Weight (g)
16-7-3739	304 stainless steel	raw	28.5	20.5	undrilled	4
16-7-3742	304 stainless steel	raw	28.5	20.5	drilled	4

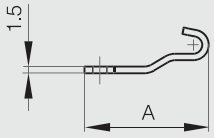

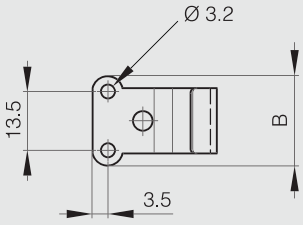

Spring loaded toggle latches without strike - 74 mm

Dimension A (74 mm) without tension. Dimension A can be extended up to 4 mm putting the latch under tension.
These latches are used with strike part numbers 16-7-3751 and 16-7-3754.
Padlockable option is available for part number 16-7-3766.

Part number	Material	Finish	A	B	C	Note	Weight (g)
16-7-3745	304 stainless steel	raw	74	47	15	undrilled	70
16-7-3748	304 stainless steel	raw	74	47	15	drilled	70

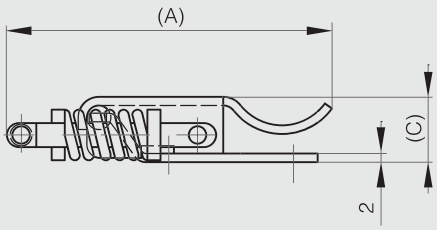

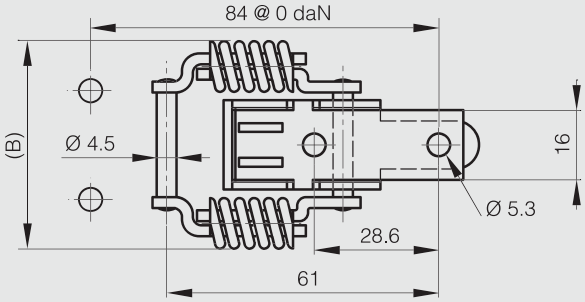

Strikes for part numbers 16-7-3745 and 16-7-3748

Part number	Material	Finish	A	B	Note	Weight (g)
16-7-3751	304 stainless steel	raw	36	40	undrilled	20
16-7-3754	304 stainless steel	raw	36	40	drilled	20

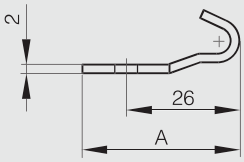

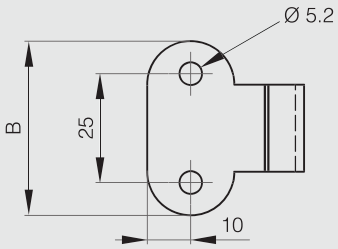

Adjustable toggle latch with secondary lock and strike

Part number	Material	Finish	A	B	C	Weight (g)
16-1-9021	304 stainless steel	electropolished	70	27.5	13.5	77

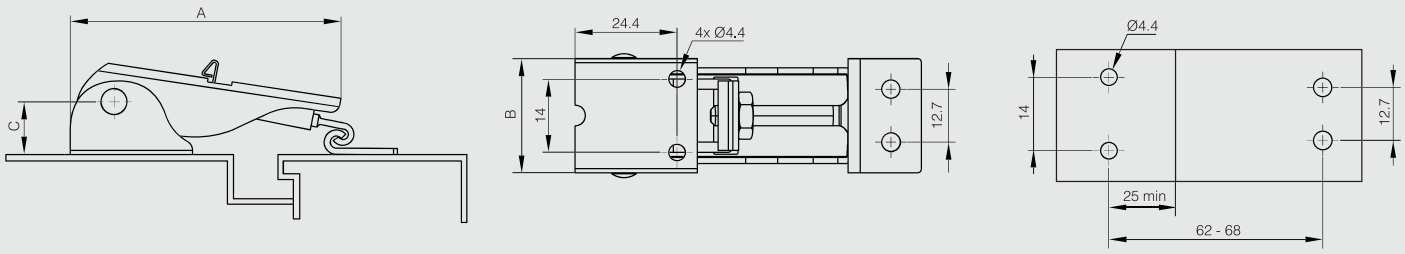

Adjustable toggle latch without strike 70.6 mm

STAINLESS STEEL

This latch is used with strike part number 16-7-3940.

Part number	Material	Finish	A	B	C	Weight (g)
16-7-3933	304 stainless steel	raw	70.6	28.2	16	50

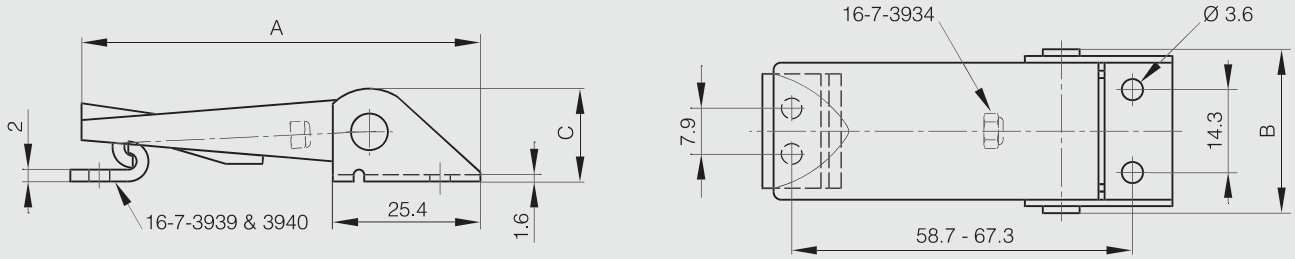

Strike for part number 16-7-3933

STAINLESS STEEL

Part number	Material	Finish	Weight (g)
16-7-3940	304 stainless steel	raw	5

Adjustable toggle latches with strike 82 mm and 103 mm long

STAINLESS STEEL RoHS

Part number	Material	Finish	A	B	C	C1	C2	D	E	F	G	H	J	S	Note	Weight (g)
16-7-4024	304 stainless steel	raw	82	28	14	2	2	4	14	5	10	52-59	18	4	82 < A < 89	46
16-7-4026	304 stainless steel	raw	103	34	16	2.5	3	5	17	6.5	10	68-86	17	5.2	103 < A < 121	90

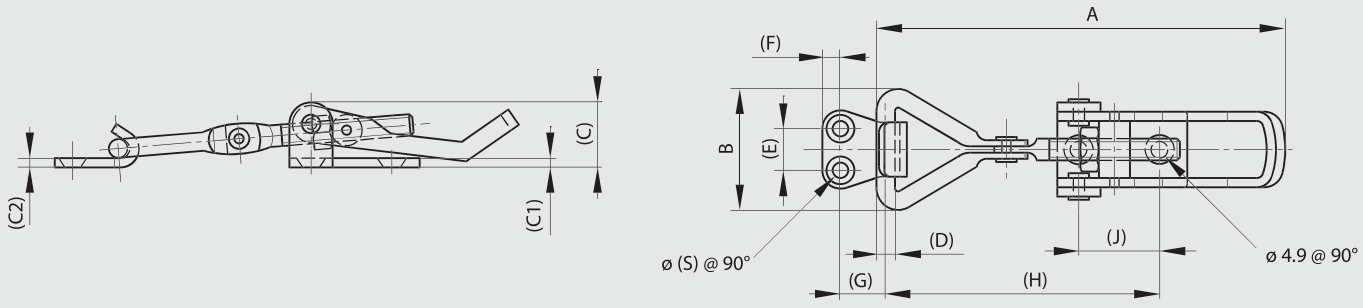

Adjustable toggle latch with strike 118 mm

STAINLESS STEEL RoHS

Part number	Material	Finish	A	B	C	Note	Weight (g)
16-7-4029	304 stainless steel	raw	118	40	18	118 < A < 128	130

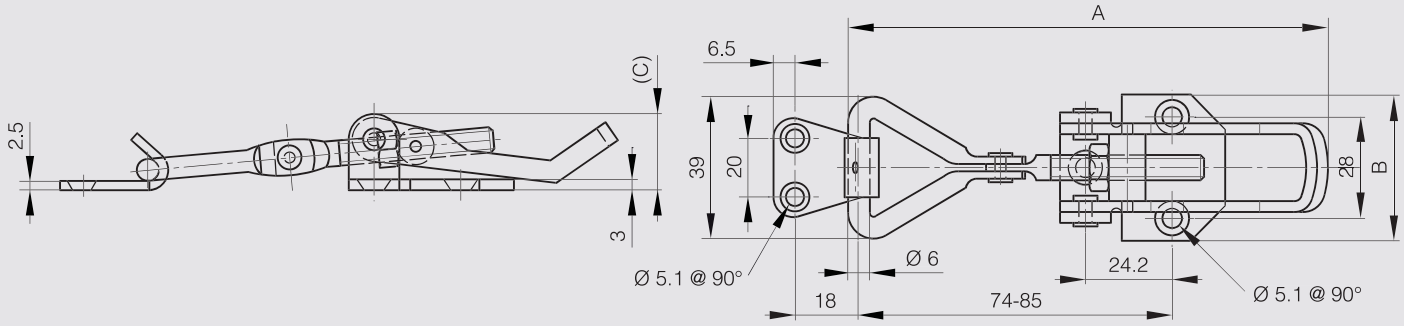

Adjustable toggle latch with strike 88 mm

Part number	Material	Finish	A	B	C	Weight (g)
16-7-3844	304 stainless steel	raw	88	48.5	26	174

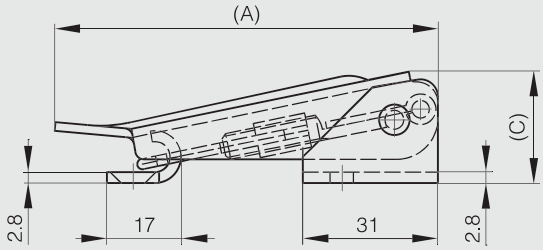

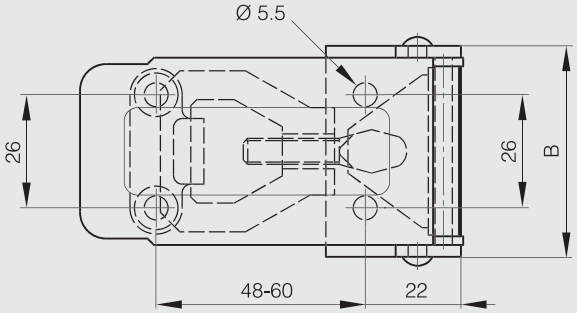

Adjustable toggle latch with strike 138 mm

Dimension A is adjustable from 138 mm to 150 mm.

Part number	Material	Finish	A	B	C	Note	Weight (g)
16-7-3841	304 stainless steel	raw	138	52	18	138 < A < 150	100

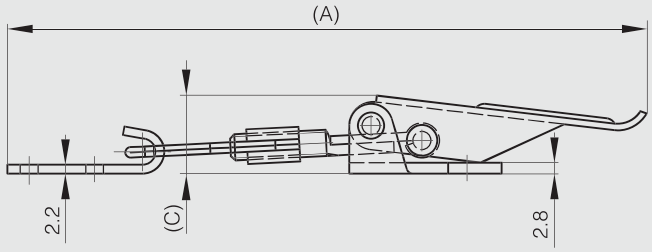

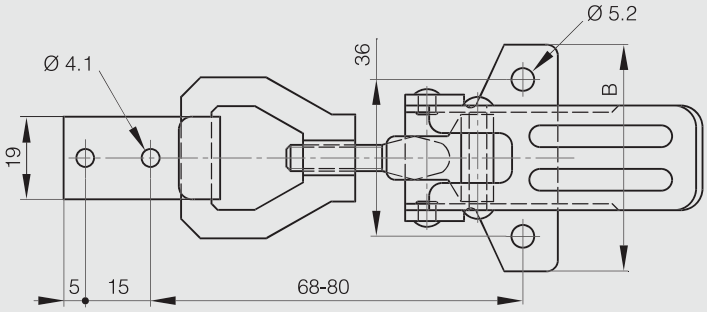

Adjustable toggle latch with secondary lock without strike

Dimension A is adjustable from 115 mm to 122 mm.

Part number	Material	Finish	A	B	C	Note	Weight (g)
16-1-4231	304 stainless steel	raw	115	52	22	115 < A < 122	85

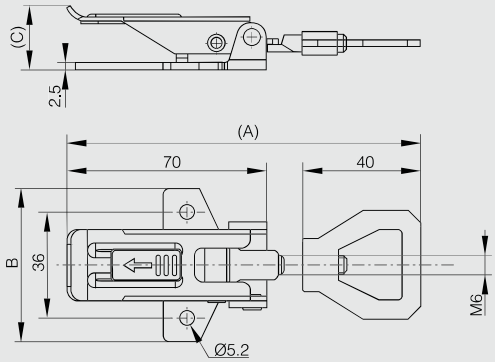

Strike for part number 16-1-4231

Part number	Material	Finish	A	B	Weight (g)
16-1-4236	304 stainless steel	raw	67	57.9	35

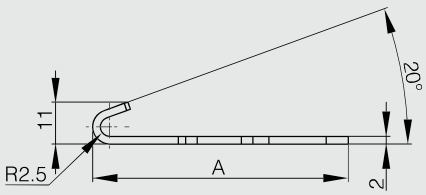

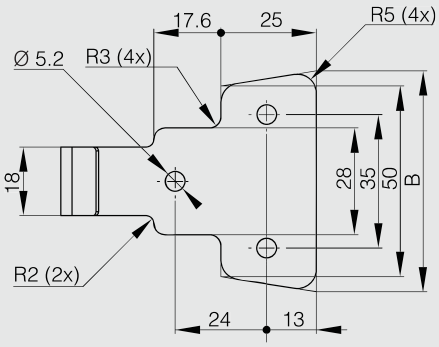

Other strikes for part number 16-1-4231

STAINLESS STEEL RoHS

Part number	Material	Finish	A	B	Note	Weight (g)
16-7-3751	304 stainless steel	raw	36	40	undrilled	20
16-7-3754	304 stainless steel	raw	36	40	drilled	20

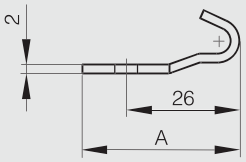

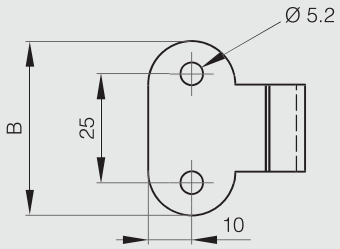

Toggle latch without strike 62.5 mm

STAINLESS STEEL RoHS

Part number	Material	Finish	A	B	C	Weight (g)
16-7-3900	304 stainless steel	raw	62.5	24.4	13.5	27

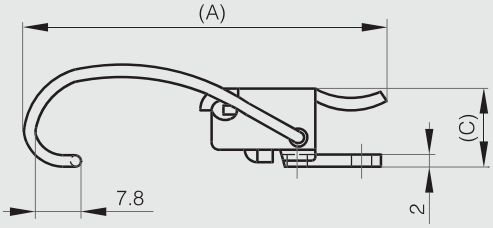

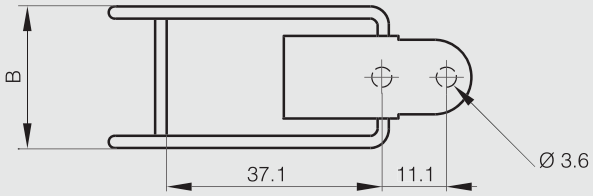

Toggle latch without strike - 64 mm

STAINLESS STEEL RoHS

Part number	Material	Finish	A	B	C	Weight (g)
16-7-3948	304 stainless steel	raw	64	28.7	14	45

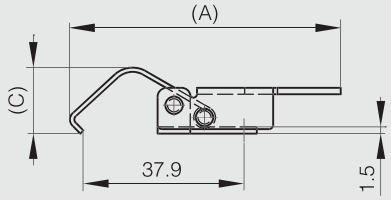

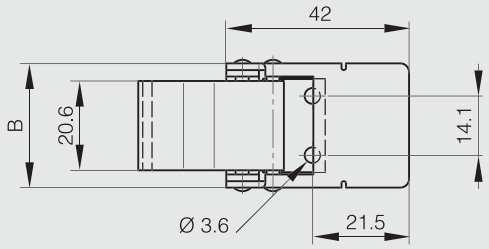

Toggle latch without strike - 67.6 mm

STAINLESS STEEL RoHS

Part number	Material	Finish	A	B	C	Weight (g)
16-7-3902	304 stainless steel	raw	67.6	25.4	13.7	32

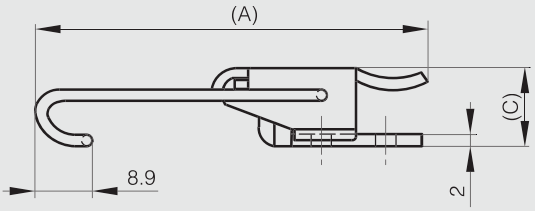

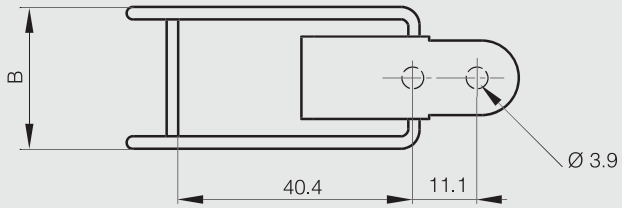

Hooked toogle latch without strike

Part number	Material	Finish	A	B	C	Note	Weight (g)
16-1-4261	304 stainless steel	raw	80	27	32.1	80 < A < 107	82

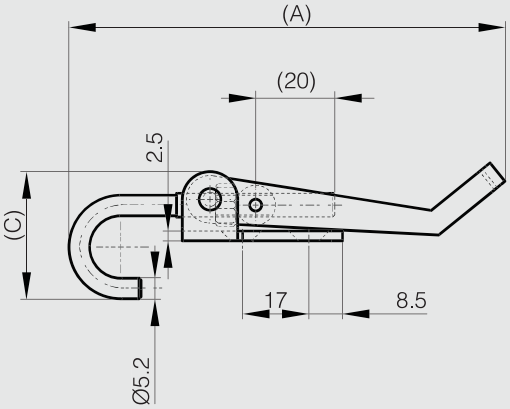

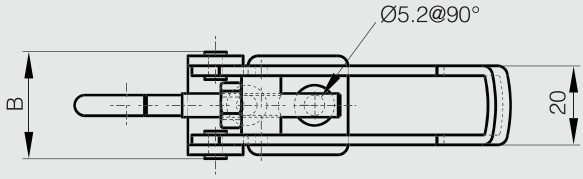

Front mounted grab handles 107 mm in stainless steel

Part number	Material	Finish	A	B	C	F	Weight (g)
19-1-3797	304 stainless steel	deburred	107	21	15	120	32

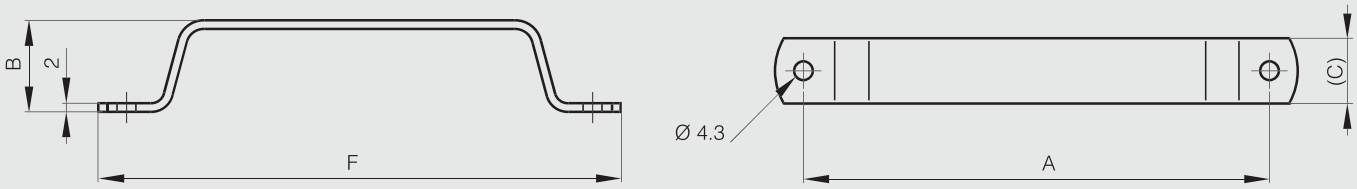

Front mounted grab handles 106 and 126 mm

Complete with wood screws.

Part number	Material	Finish	A	B	C	D	E	F	G	H	S	Weight (g)
19-7-3694	304 stainless steel	mirror polished	106	27	36	7	5	120	24	12	4.1	131
19-7-3695	304 stainless steel	mirror polished	126	33	45	8	6	150	30	15	5.3	242

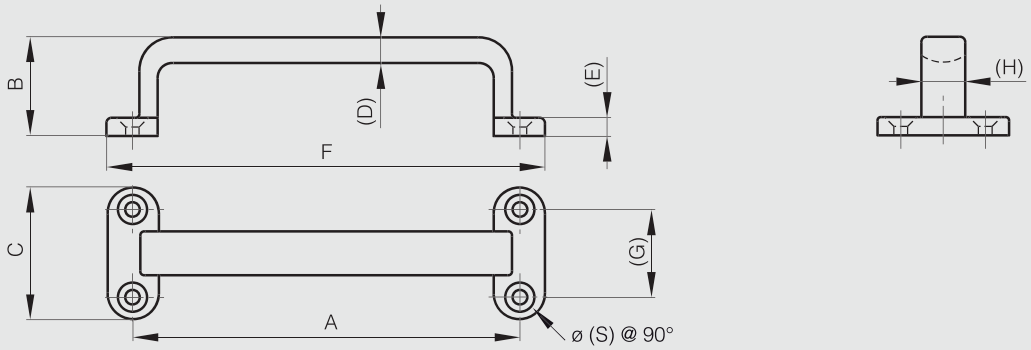

Rear mounted grab handles 110 mm

STAINLESS STEEL RoHS

Part number	Material	Finish	A	B	D	L	M	Weight (g)
19-1-3424	304 stainless steel	polished	110	35	8	11	5	61

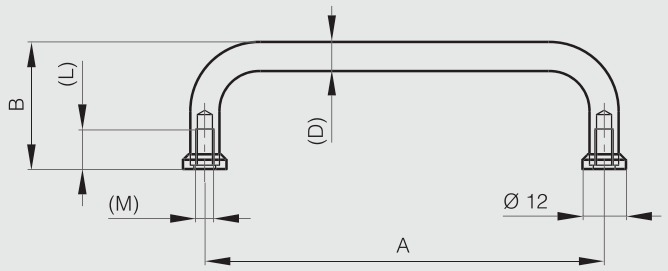

Rear mounted grab handles 95 to 150 mm

STAINLESS STEEL

For use with M4 screws (included).

Part number	Material	Finish	A	B	D	L	M	Weight (g)
19-7-3701	304 stainless steel	mirror polished	95	28	9	8	4	76
19-7-3700	304 stainless steel	mirror polished	120	28	9	8	4	88
19-7-3699	304 stainless steel	mirror polished	150	28	9	8	4	103

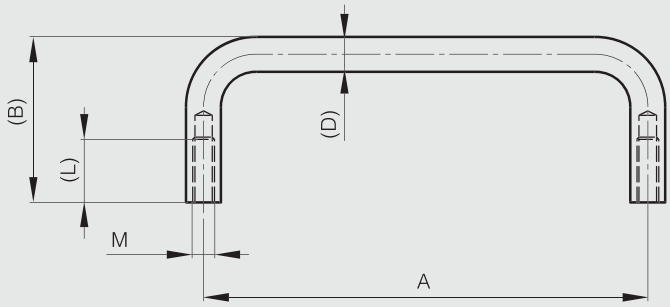

Rear mounted grab handles 92 to 200 mm

STAINLESS STEEL

Complete with M5 screws for 304 stainless steel version (included).

Part number	Material	Finish	A	B	C	D	L	Weight (g)
19-1-3833	316 stainless steel	mirror polished	92	32	14.8	7.8	10	120
19-7-3696	304 stainless steel	mirror polished	100	40	14	8	11	120
19-1-3834	316 stainless steel	mirror polished	110	32	14.8	7.8	10	120
19-7-3697	304 stainless steel	mirror polished	150	50	14	8	11	174
19-7-3698	304 stainless steel	mirror polished	200	50	14	8	11	210

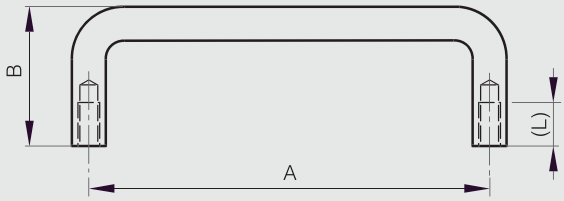

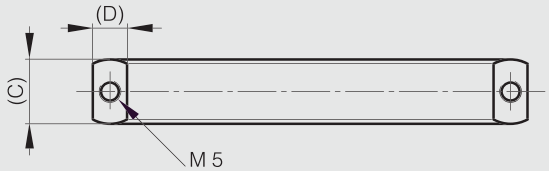

Drop handle with chamfered angles - load 35 kg

With 90° stop.

Part number	Material	Finish	A	B	C	D	E	S	Note	Weight (g)
19-7-3690	304 stainless steel	raw	158	54	130	89	7	5.2	load: 35 kg / chamfremed angles	120

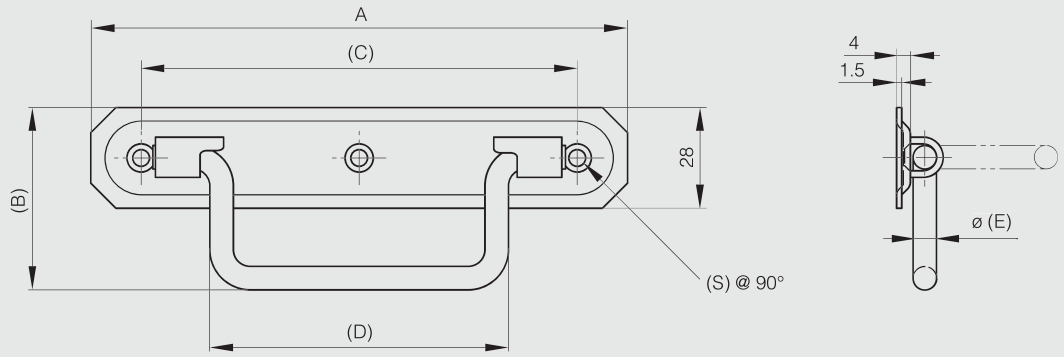

Spring loaded handles - load 34 kg - 180° opening

Maximum load: 34 kg.
With 180° stop.
Rubber grip in EPDM.
Produced mainly in stainless steel, for a complete description of the materials contact us.

Part number	Material	Finish	A	B	C	Weight (g)
19-7-3711	304 stainless steel	passivated	130	75.4	46	227

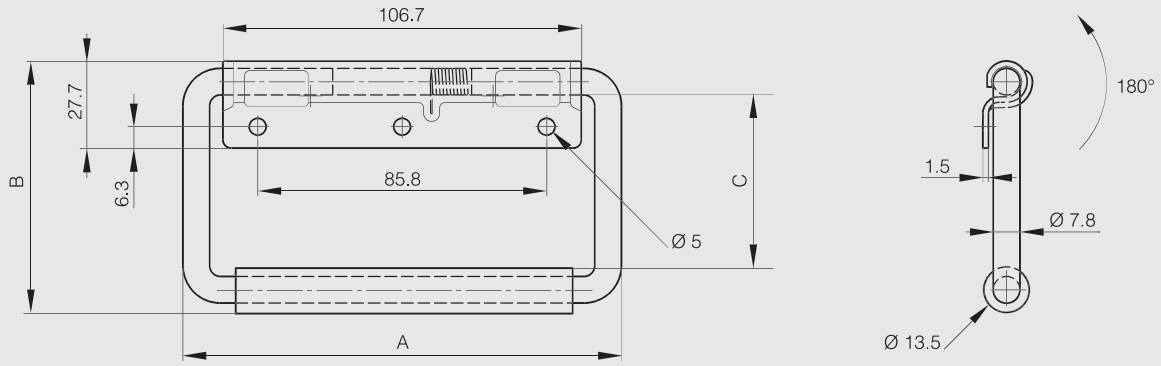

Spring loaded handles 130.3 mm - load 45 kg

STAINLESS STEEL

Maximum load: 45 kg.
With 90° stop.
Rubber grip.
Produced mainly in stainless steel, for a complete description of the materials contact us.

Part number	Material	Finish	A	B	C	E	Weight (g)
19-7-3746	304 stainless steel	raw	130.3	82.6	38.1	41.9	217
19-7-3741	302 stainless steel	raw	130.3	104.1	60.4	41.9	237

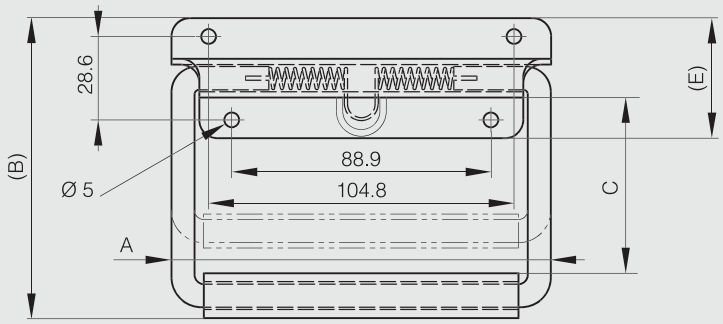

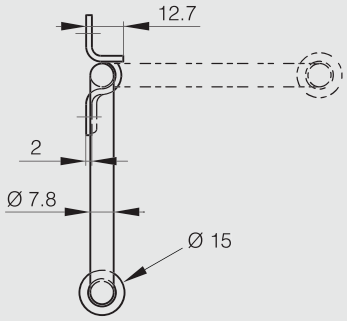

Spring loaded handle 130 mm - load 54 kg

STAINLESS STEEL RoHS

Maximum load: 54 kg.
With 90° stop.
A special aluminium sleeve located between the rubber grip and the bail assures the grip will not ride up on the bail during lifting. Adds comfort and durability.
Fungus resistant neoprene.
Meets military specifications MIL.T.945, MIL.C.4150.
Produced mainly in stainless steel, for a complete description of the materials contact us.

Part number	Material	Finish	A	B	C	Weight (g)
19-7-3725	304 stainless steel	raw	130	112.7	50.8	317

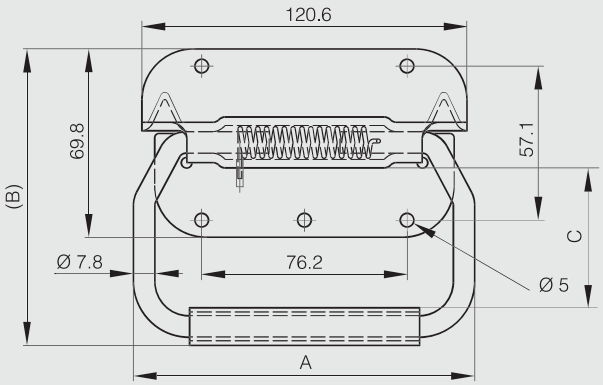

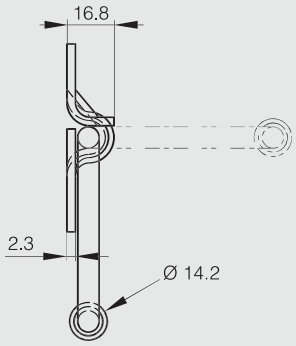

Retractable flush handles in stainless steel

Part number	Material	Finish	A	B	C	D	E	F	Weight (g)
19-7-3813	304 stainless steel	satin	76	36	24	60	18	90	46
19-7-3814	304 stainless steel	satin	94	42	24	72	18	110	55

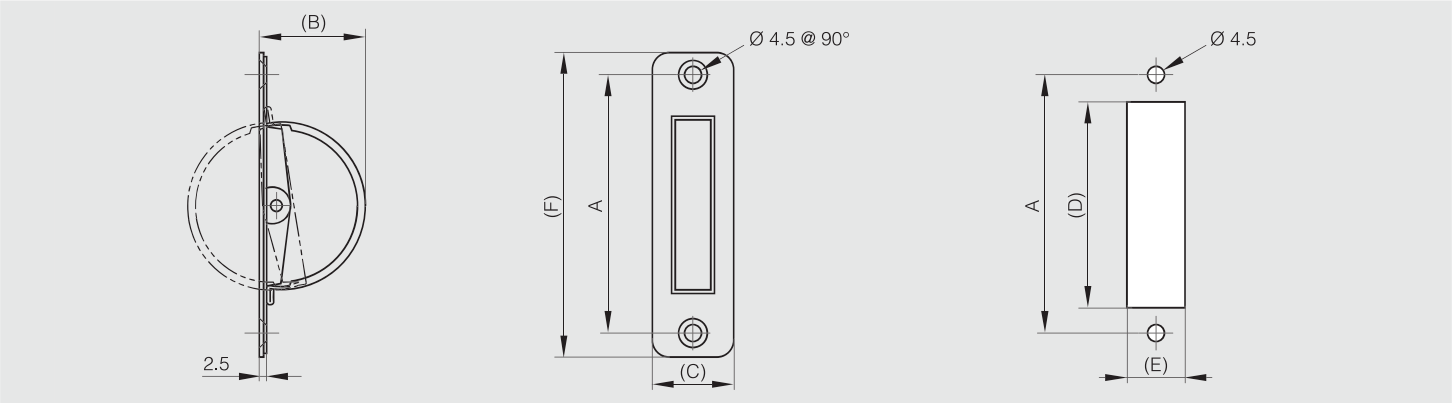

Bolt-on flush handle 120 x 60 mm

Part number	Material	Finish	A	B	C	Weight (g)
19-7-3831	304 stainless steel	satin	120	60	15	54

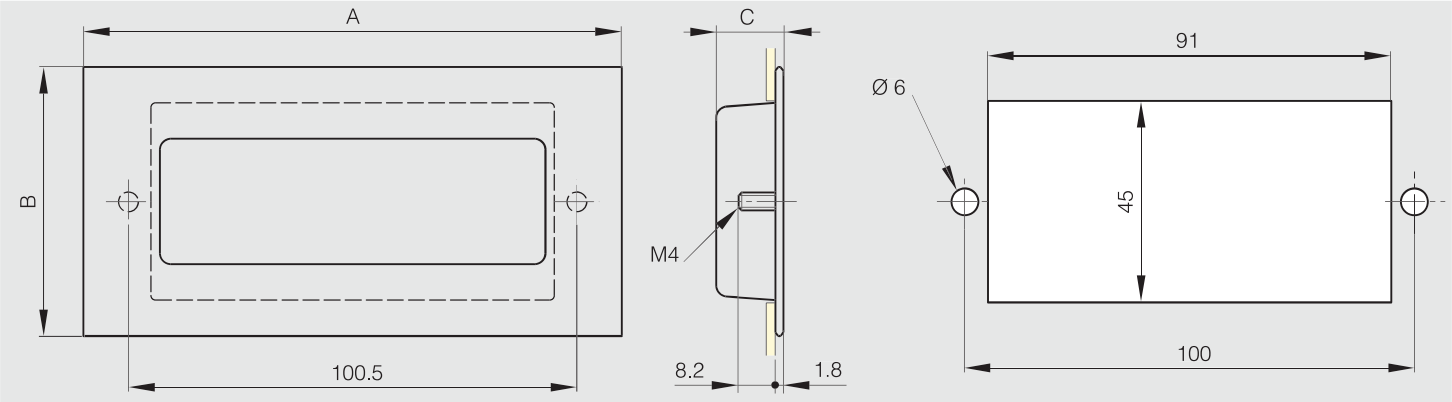

Bolt-on flush handle 120 x 62 mm

STAINLESS STEEL

Bolt in copper plated steel.
Produced mainly in stainless steel, for a complete description of the materials contact us.

Part number	Material	Finish	A	B	C	Weight (g)
19-7-3832	304 stainless steel	satin	120	62	16	60

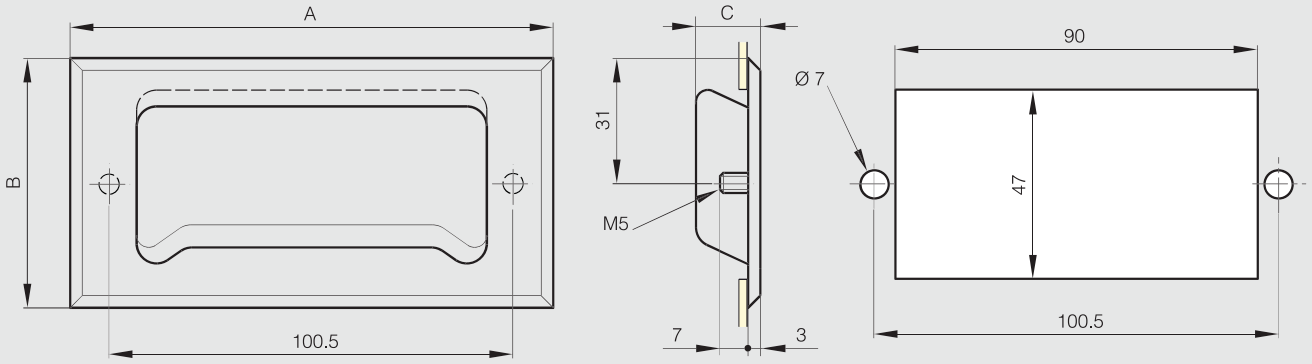

Bolt-on flush handle 138 x 88 mm

STAINLESS STEEL RoHS

Stud in 304 stainless steel.

Part number	Material	Finish	A	B	C	Weight (g)
19-7-3845	304 stainless steel	satin	138	88	26	170

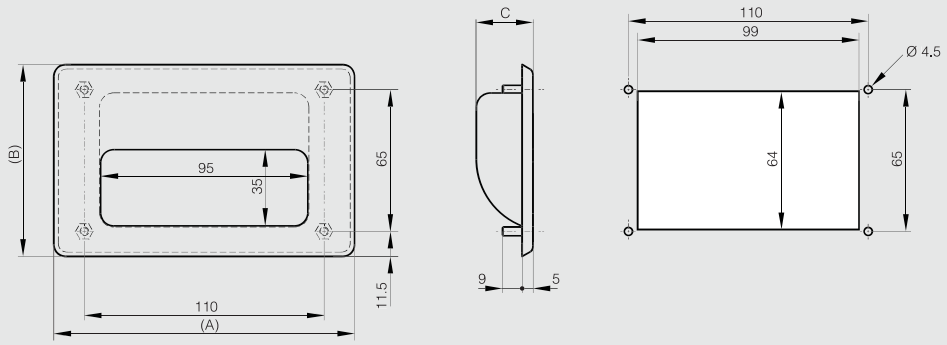

Support stays with automatic release - small size

STAINLESS STEEL RoHS

Load capacity: 6 kg.
Produced mainly in stainless steel, for a complete description of the materials contact us.

Part number	Material	Finish	A	B	C	D	K	Weight (g)
24-7-3571	304 stainless steel	raw	88	140	15.4	8.8	52	40
24-7-3577	304 stainless steel	raw	67	100	15.4	8.8	32	10

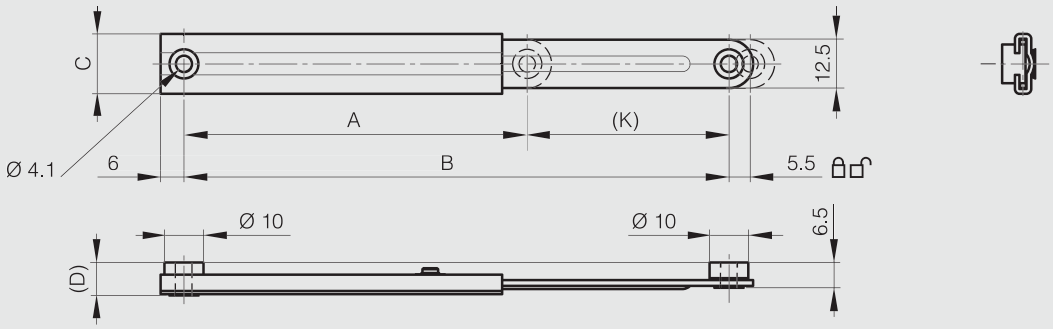

Support stays with automatic release in stainless steel

STAINLESS STEEL

Load capacity: 15 kg.

Part number	Material	Finish	A	B	Weight (g)
24-7-3552	304 stainless steel	satin	133	195	125
24-7-3553	304 stainless steel	satin	170	270	150

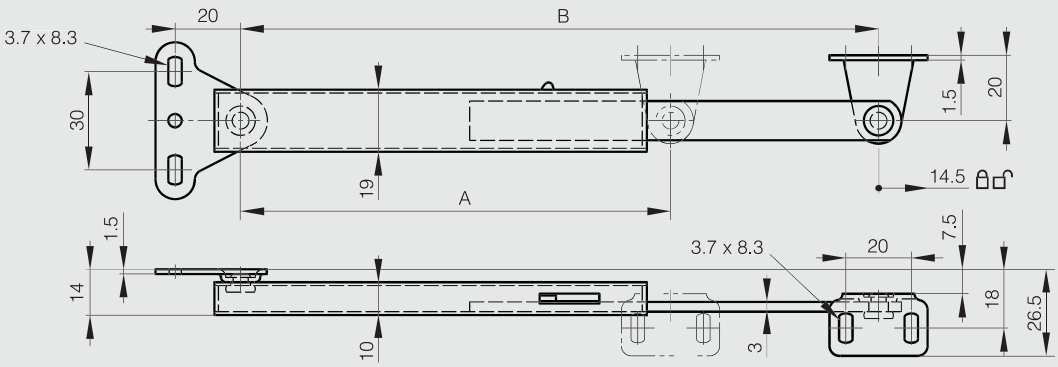

Support stays with manual release

STAINLESS STEEL RoHS

A = closed dimension.
B = extended dimension.
Load capacity: 50 kg.
Push button release.

Part number	Material	Finish	A	B	Weight (g)
24-1-3558	304 stainless steel	raw	125	175	101
24-1-3559	304 stainless steel	raw	150	225	125
24-1-3560	304 stainless steel	raw	175	275	145

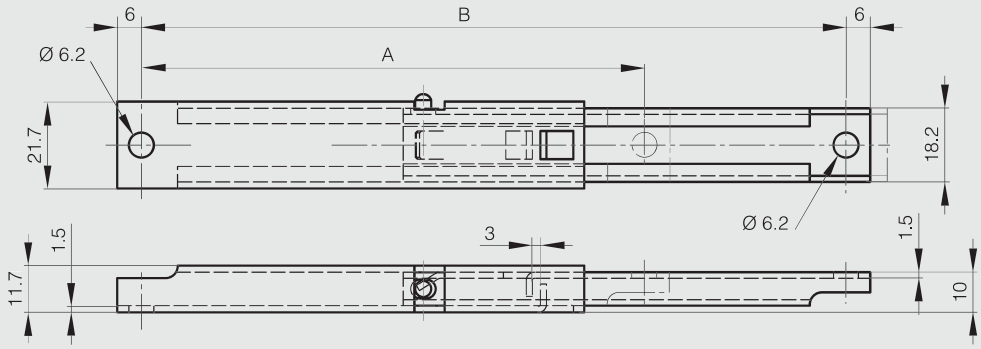

Bracket

STAINLESS STEEL

Complete with M6 screw, M6 nut and 3 mm thick washer (included).
For part numbers 24-1-3558, 24-1-3559 and 24-1-3560.

Part number	Material	Finish	A	B	Weight (g)
99-1-3558	stainless steel	raw	50	26	60

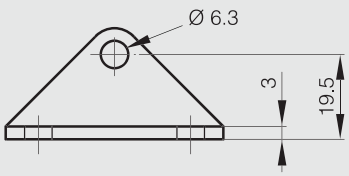

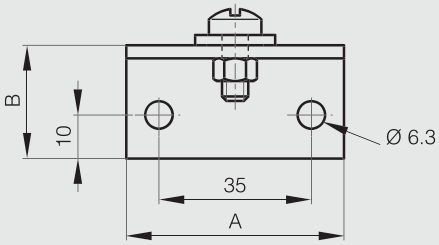

Multi-angle lid stay with lock

STAINLESS STEEL

Locks lid in multiple positions by manually sliding lock lever.
Slide back lever to lock / unlock.
Ideal for vibration or shock applications.
Can be installed individually or in pairs.
Non-handed: can be installed on left or right side.
Compression load: max. 290 N.
Produced mainly in stainless steel, for a complete description of the materials contact us.

Part number	Material	Finish	A	B	Weight (g)
24-7-3580	304 stainless steel	satin	224	350	325

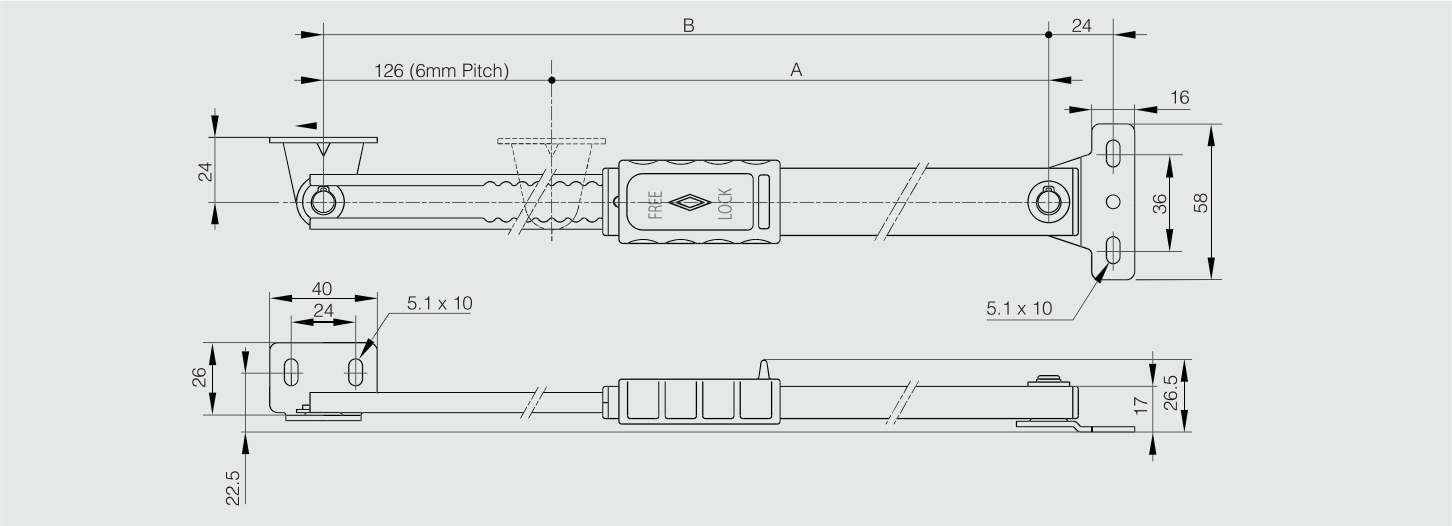

Support stay

STAINLESS STEEL RoHS

For limiting opening angle of panels.
Produced mainly in stainless steel, for a complete description of the materials contact us.

Part number	Material	Finish	A	B	Weight (g)
24-7-3546	304 stainless steel	satin	180	210	90
24-7-3547	304 stainless steel	satin	210	240	95
24-7-3548	304 stainless steel	satin	240	270	107

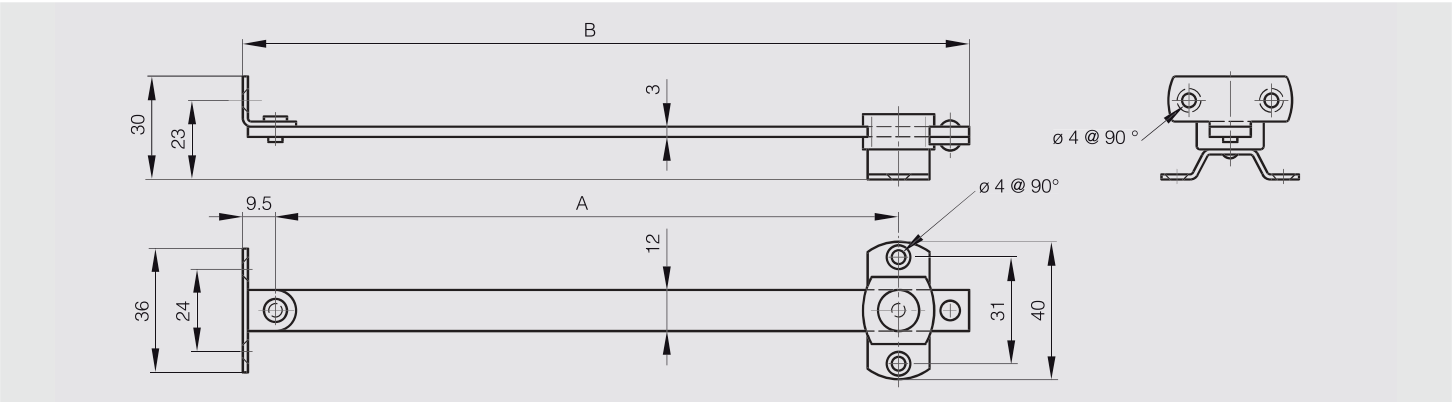

Heavy duty spring loaded stay

STAINLESS STEEL RoHS

- Spring mechanism assists in lifting door and holds in open position (10° to 80°).
- Can be installed individually or in pairs.
- Non-handed: can be installed on left or right side.
- Torque calculation:

Torque (N.m) = H(m) x 1/2 x W (kg) x 9.8 with:
H = door height (m)
W = door weight (kg)
Produced mainly in stainless steel, for a complete description of the materials contact us.

Part number	Material	Finish	A	Torque	Weight (g)
24-7-3579	430 stainless steel	raw	94.2	8.8 - 11.8 N.m	195

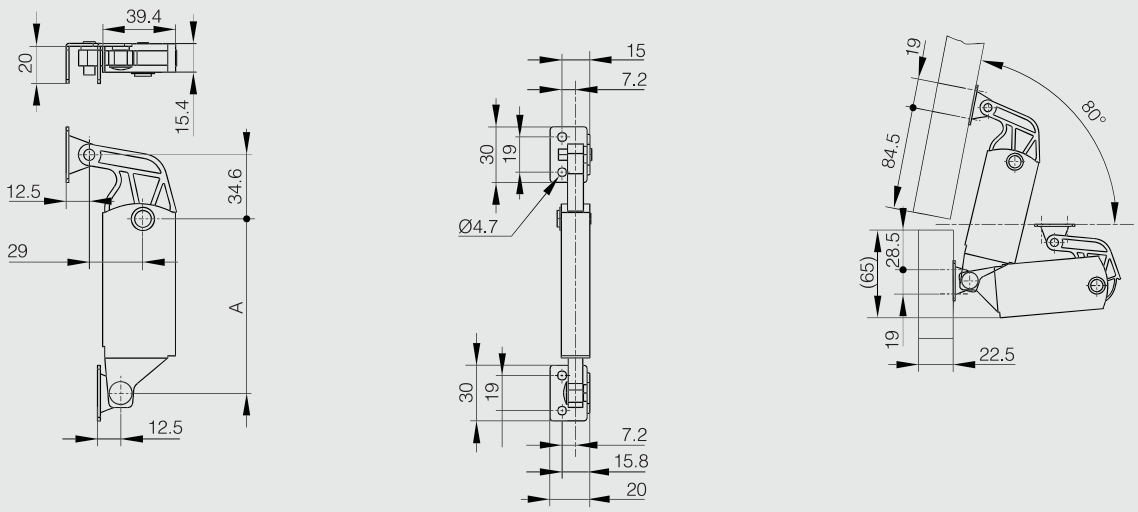

Easy Operation with power assist

Free stop

Compact

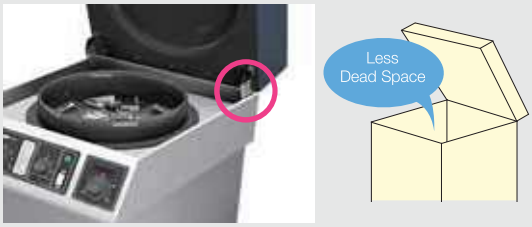

Selection graph

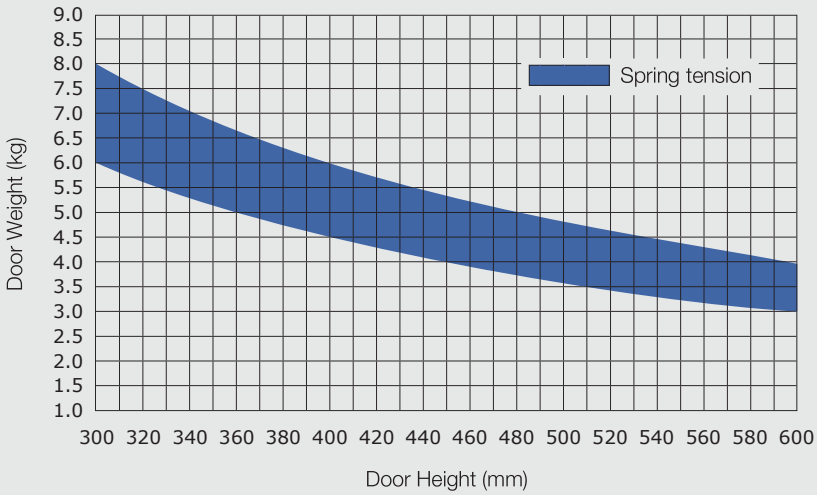

Stay with safety stop

STAINLESS STEEL RoHS

Part number	Material	Finish	A	B	Weight (g)
24-1-9000	304 stainless steel	raw	139	152	148
24-1-9001	304 stainless steel	raw	139	152	148

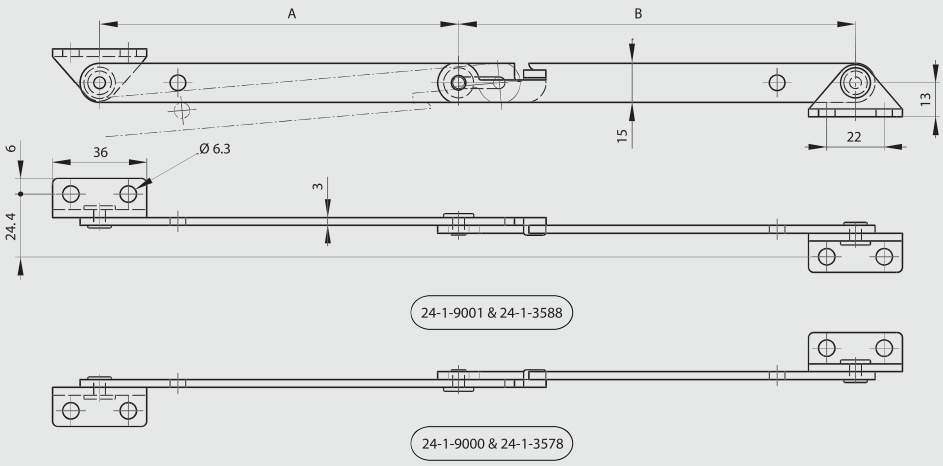

Stays without bracket

STAINLESS STEEL RoHS

Produced mainly in stainless steel, for a complete description of the materials contact us.

Part number	Material	Finish	A	Weight (g)
24-1-0247	304 stainless steel	polished	102	35
24-1-0248	304 stainless steel	polished	102	35

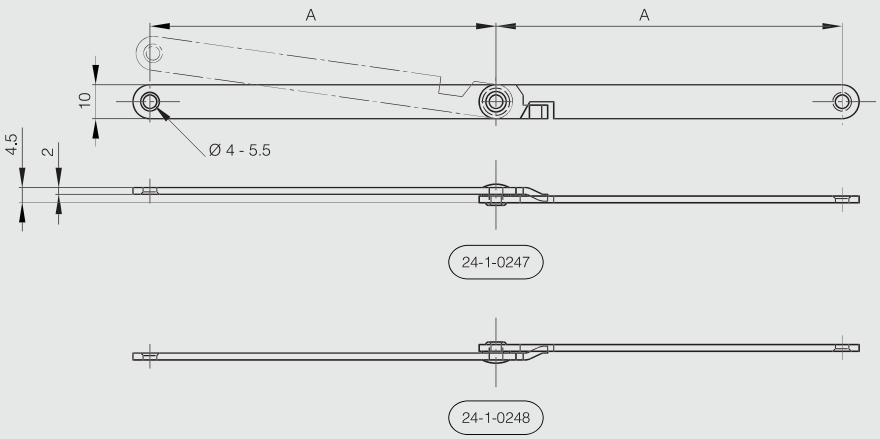

Folding bracket

NEW

STAINLESS STEEL RoHS

Automatically locks when flap is in opened position.
Press lever to release the lock.
Bracket with hinge function in one unit.
Load capacity:
24-7-2587 =150kg/unit
24-7-3595 =175kg/unit

	Part number	Material	Finish	A	B	C	D	E	F	G	H	Weight (g)
NEW	**24-7-3595**	304 stainless steel	polished	201	116	29	155	-	21	80	-	332
	24-7-3587	304 stainless steel	polished	307	165	29	98	156	38	45	67	515

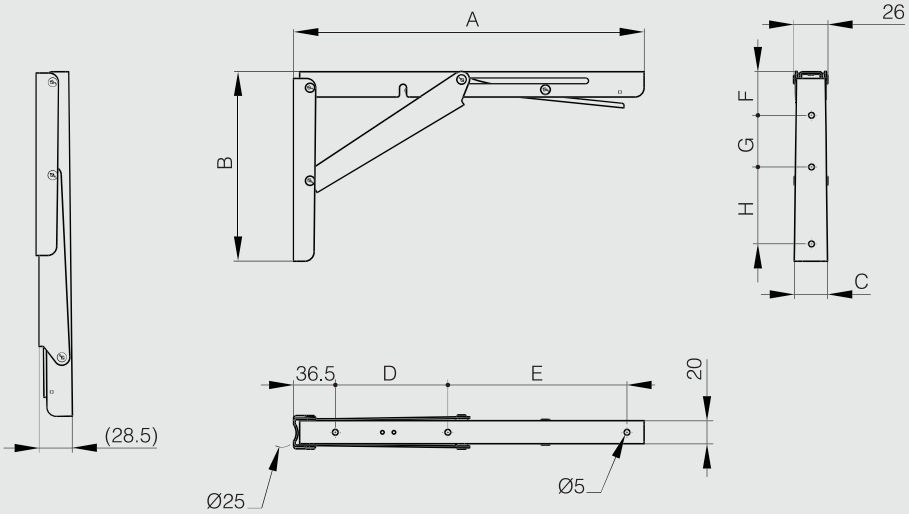

Door holders

STAINLESS STEEL

Automatically locks door when fully opened. Slide the locking lever to release the lock.
Tensile force: Max 1500 N.
Compression load: Max 600 N.
Handed: specific left and right hand mounting.

Part number	Material	Finish	A	Weight (g)
22-7-3547	304 stainless steel	polished	200	630
22-7-3548	304 stainless steel	polished	200	630

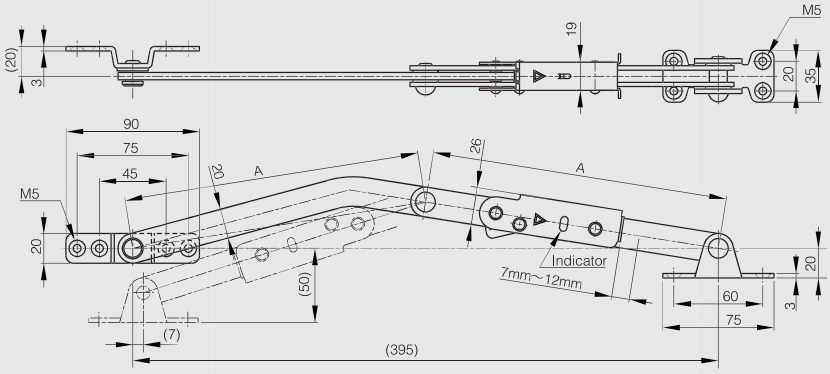

22-7-3547

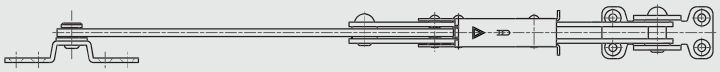

22-7-3548

Hook

NEW

STAINLESS STEEL RoHS

Load Capacity
22-7-3561= 200 N
22-7-3560 = 150 N

Parts included : stainless steel raised countersunk head wood screw 4.1 x 16

	Part number	Material	Finish	A	B	C	D	E	F	G	Weight (g)
NEW	22-7-3561	304 stainless steel	satin	55	15	4	33	23	8	19	34
NEW	22-7-3560	304 stainless steel	satin	70	18	4	43	30	10	23	53

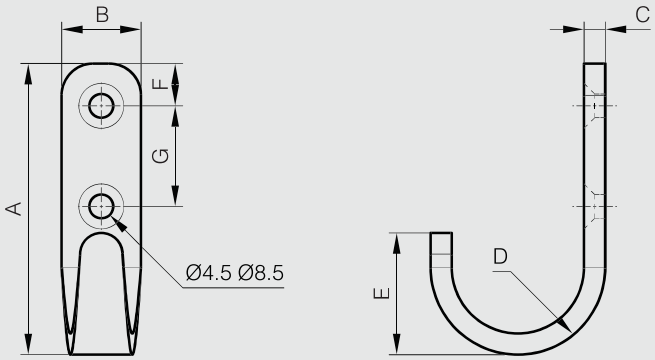

Double hook

NEW

STAINLESS STEEL RoHS

Load capacity: 130 N

Parts included : stainless steel head tapping screw 3 x 16.

	Part number	Material	Finish	A	B	C	Weight (g)
NEW	22-7-3557	304 stainless steel	satin	100	13	2	16

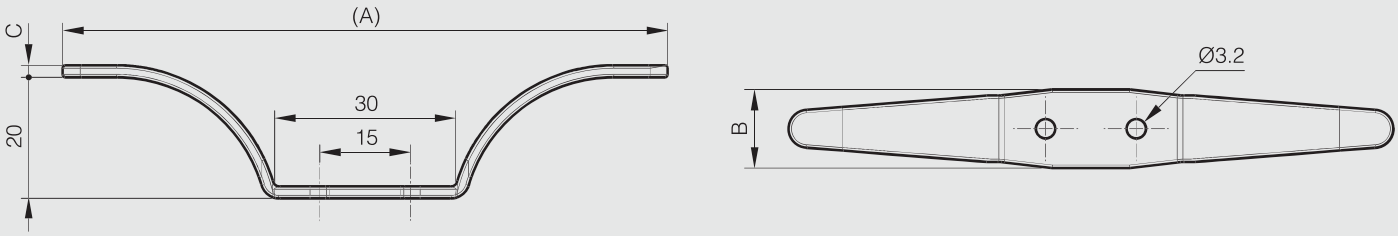

Rotating swing hook

NEW

STAINLESS STEEL RoHS

Easy to use hook that swings 180° vertically and rotates 360°.
Can be installed on either ceilings or walls.
Load capacity: 87 N

Parts included : raised countersunk head tapping screw 4 x 16.

	Part number	Material	Finish	A	B	C	Weight (g)
NEW	22-7-3558	304 stainless steel	polished	48	18	2.5	45

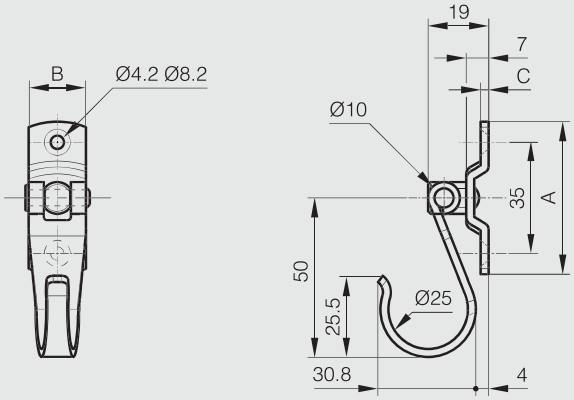

Swing hook

NEW

STAINLESS STEEL RoHS

Swivels 180°
Hook with friction
Load capacity: 118 N

Parts included : countersunk head wood screws 3.5 x 20

	Part number	Material	Finish	A	B	C	Weight (g)
NEW	22-7-3559	304 stainless steel	polished	20	35	36	17

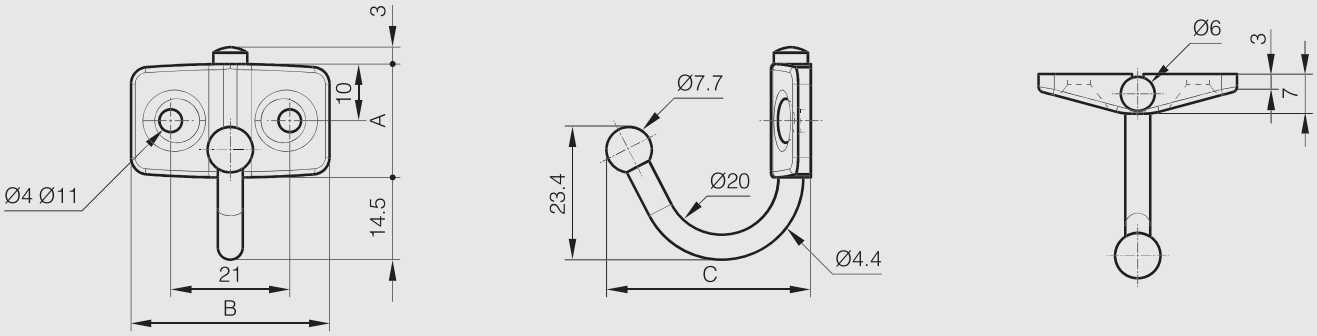

3/4 extension ball-bearing slide (2 pieces), front disconnect

STAINLESS STEEL RoHS

LG = slide length.
K = travel length.
CN = load rating (kg/pair).

Sold by the unit.

Part number	Material	Finish	K	LG	A	B	C	D	E	F	G	CN	Weight (g)
21-7-3576	304 stainless steel	raw	228.6	304.8	-	149.2	260.3	273	-	152.4	254	49	300
21-7-3577	304 stainless steel	raw	279.4	355.6	-	200	311.1	323.8	-	203.2	304.8	47	360
21-7-3562	304 stainless steel	raw	304.8	406.4	-	250.8	361.9	374.6	-	254	359.6	43	420
21-7-3563	304 stainless steel	raw	330.2	457.2	212.7	301.6	412.7	425.4	203.2	304.8	406.4	41	460
21-7-3564	304 stainless steel	raw	382	508	238.1	352.4	463.5	476.2	228.6	355.6	457.2	37	490
21-7-3565	304 stainless steel	raw	406.4	558.8	263.5	403.2	514.3	527	254	406.4	508	34	560
21-7-3566	304 stainless steel	raw	432.8	609.6	288.9	454	565.1	577.8	279.4	457.2	558.8	30	590
21-7-3567	304 stainless steel	raw	482.6	660.4	314.3	504.8	615.9	628.6	304.8	508	609.6	27	660
21-7-3568	304 stainless steel	raw	508	711.2	339.7	555.6	666.7	679.4	330.2	558.8	660.4	25	690

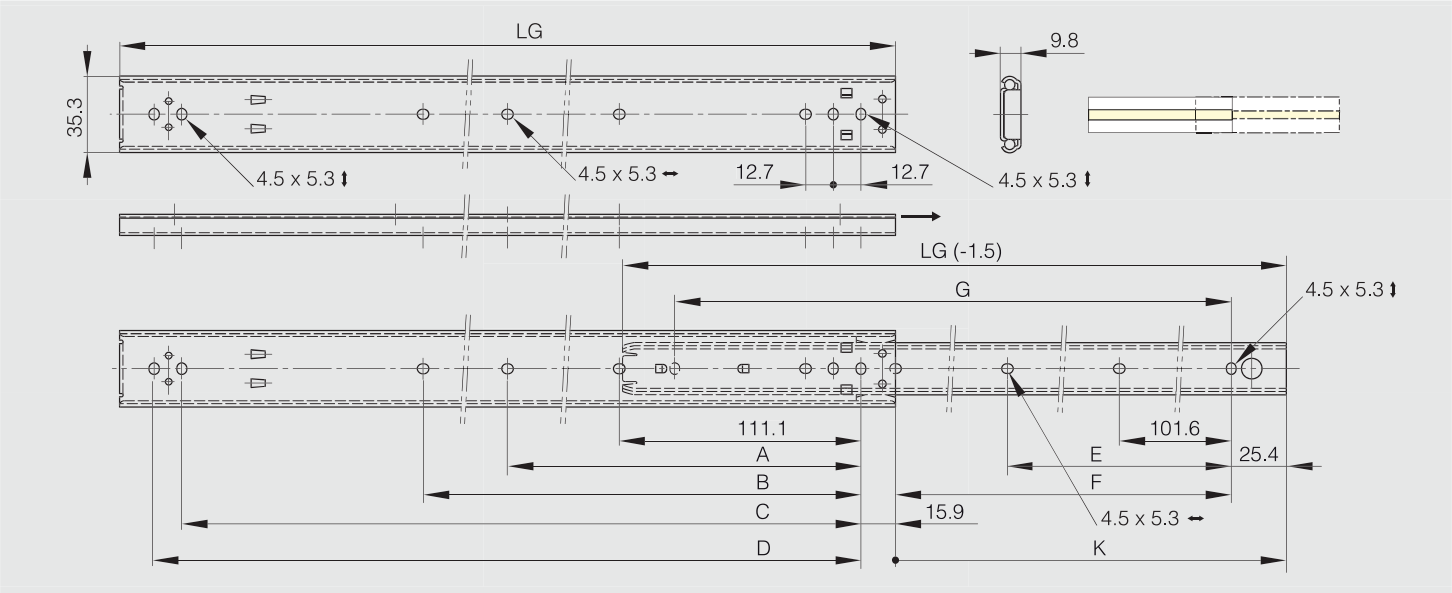

Full extension ball-bearing slide (3 pieces), front disconnect and positive lock

STAINLESS STEEL RoHS

LG = slide length.
K = travel length.
CN = load rating (kg/pair).

Sold by the unit.

Part number	Material	Finish	K	LG	A	B	C	D	E	F	G	H	CN	Weight (g)
21-7-3569	304 stainless steel	raw	421.7	406.4	250.8	361.9	374.6	-	-	349.2	361.9	374.6	57	840
21-7-3570	304 stainless steel	raw	472.5	457.2	301.6	412.7	425.4	212.7	-	400	412.7	425.4	53	950
21-7-3571	304 stainless steel	raw	523.3	508	352.4	463.5	476.2	238.1	-	450.8	463.5	476.2	49	1030
21-7-3572	304 stainless steel	raw	574.1	558.8	403.2	514.3	527	263.5	415.9	501.6	514.3	527	45	1150
21-7-3573	304 stainless steel	raw	624.9	609.6	454	565.1	577.8	288.9	466.7	552.4	565.1	577.8	42	1280
21-7-3574	304 stainless steel	raw	675.7	660.4	504.8	615.9	628.6	314.3	517.5	603.2	615.9	628.6	39	1400
21-7-3575	304 stainless steel	raw	726.5	711.2	555.6	666.7	679.4	339.7	568.3	654	666.7	679.4	36	1500

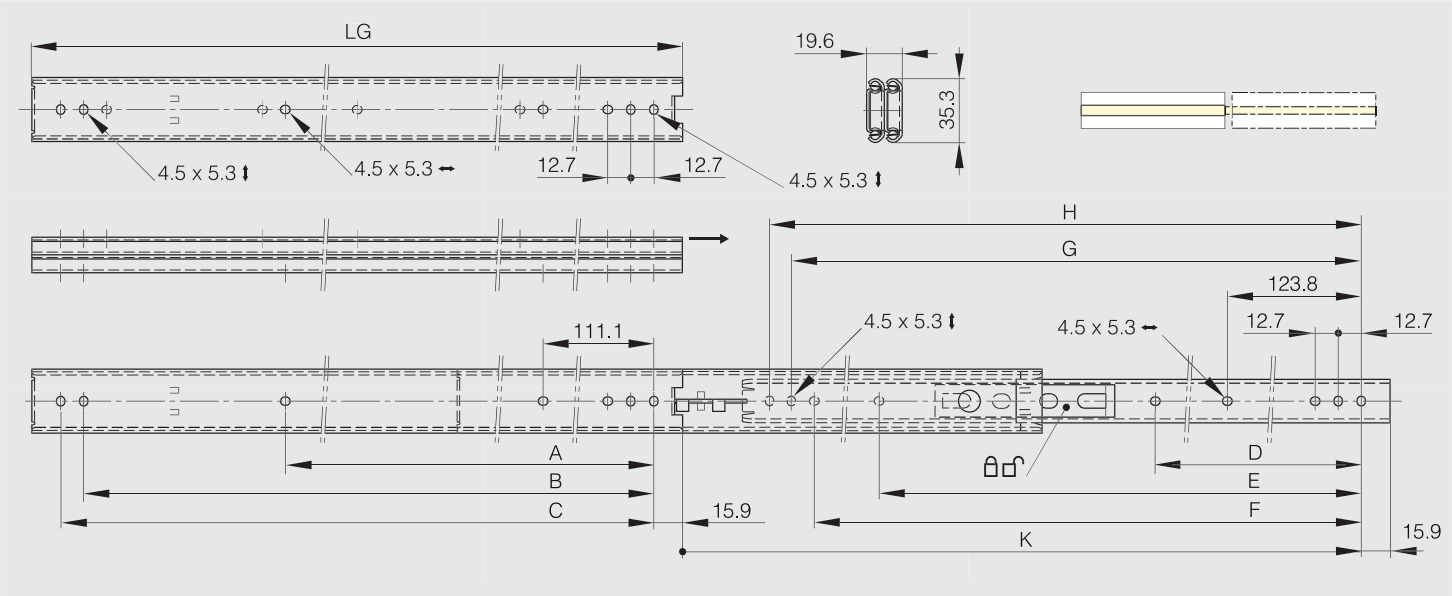

Full extension ball-bearing slide (3 pieces), front disconnect and positive stop

STAINLESS STEEL RoHS

LG = slide length.
K = travel length.
CN = load rating (kg/pair).

Sold by the unit.

Part number	Material	Finish	K	LG	A	B	C	D	CN	Weight (g)
21-7-3578	304 stainless steel	raw	327.2	304.8	-	149.2	260.3	273	60	620
21-7-3579	304 stainless steel	raw	378	355.6	-	200	311.1	323.8	59	720
21-7-3555	304 stainless steel	raw	428.4	406.4	-	250.8	361.9	374.6	57	820
21-7-3556	304 stainless steel	raw	479.2	457.2	212.7	301.6	412.7	425.4	56	920
21-7-3557	304 stainless steel	raw	530	508	238.1	352.4	463.5	476.2	54	1025
21-7-3558	304 stainless steel	raw	580.8	558.8	263.5	403.2	514.3	527	51	1125
21-7-3559	304 stainless steel	raw	631.6	609.6	288.9	454	565.1	577.8	49	1225
21-7-3560	304 stainless steel	raw	682.4	660.4	314.3	504.8	615.9	628.6	47	1325
21-7-3561	304 stainless steel	raw	733.2	711.2	339.7	555.6	666.7	679.4	45	1425

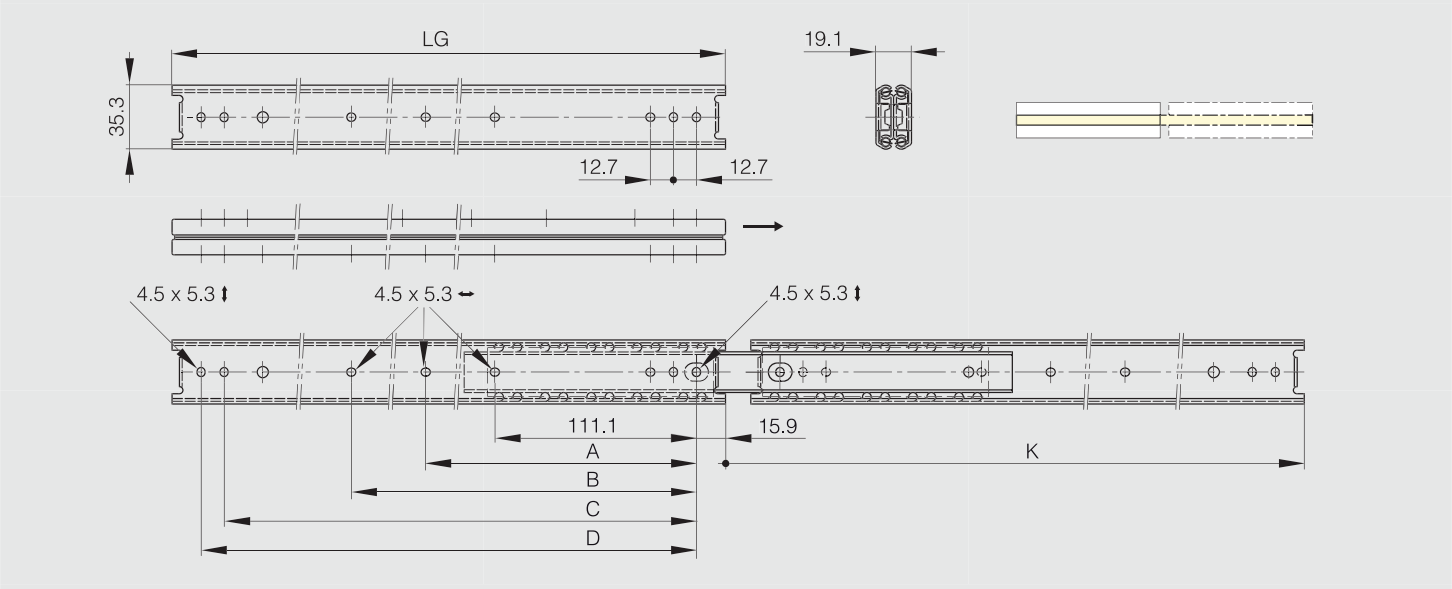

Heavy duty, full extension ball-bearing slide (3 pieces), front disconnect and positive stop

STAINLESS STEEL RoHS

LG = slide length.
K = travel length.
CN = load rating (kg/pair).

Sold by the unit.

Part number	Material	Finish	K	LG	A	B	C	CN	Weight (g)
21-7-3548	304 stainless steel	raw	420.6	406.6	-	250.8	374.6	259	2340
21-7-3549	304 stainless steel	raw	471.4	457.4	212.7	301.6	425.4	250	2500
21-7-3550	304 stainless steel	raw	522.2	508.2	238.1	352.4	476.2	241	2840
21-7-3551	304 stainless steel	raw	573	559	263.5	403.2	527	229	3250
21-7-3552	304 stainless steel	raw	623.8	609.8	288.9	454	577.8	216	3500
21-7-3553	304 stainless steel	raw	674.6	660.6	314.3	504.8	628.6	200	3840
21-7-3554	304 stainless steel	raw	725.4	711.4	339.7	555.6	679.4	182	4170

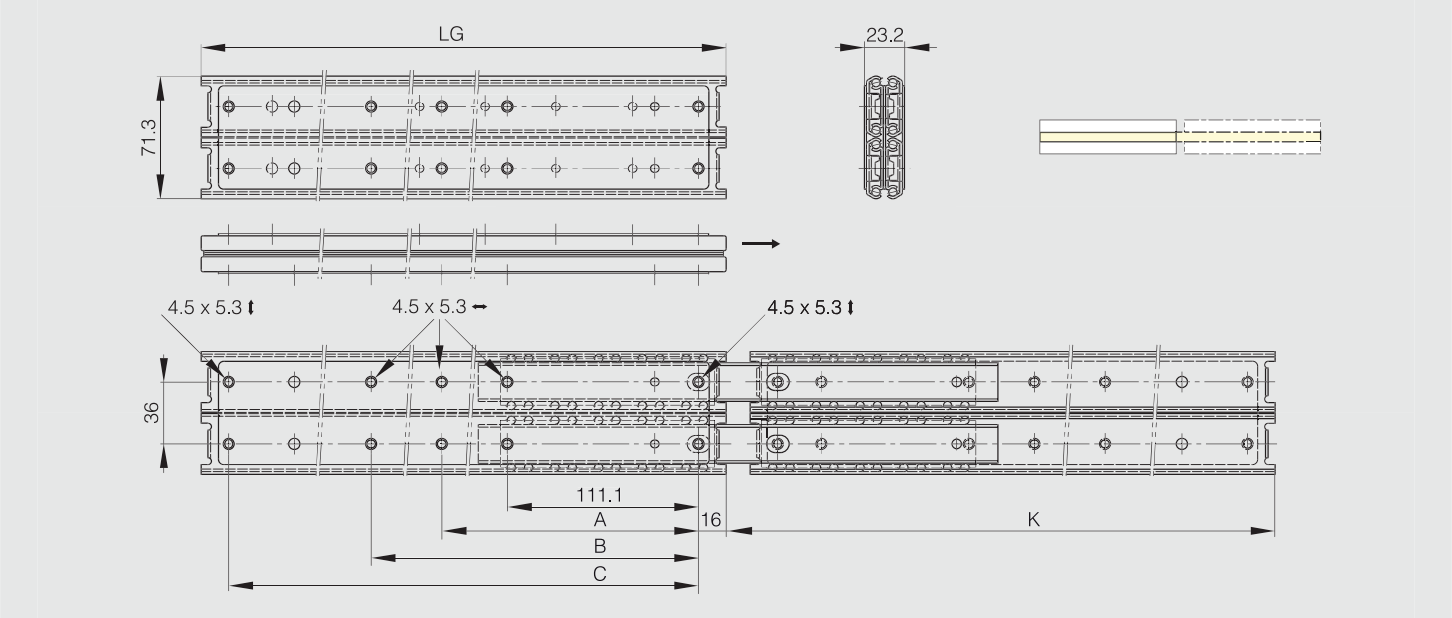

Full extension ball-bearing slide (3 pieces), soft-closing

STAINLESS STEEL RoHS

LG = slide length.
K = travel length.
CN = load rating (kg/pair).

Soft-close slide.
The drawer can be detached by pushing the lever while pulling the drawer out.
Soft-closes at 20 mm distance from closed position (LG = 300-350 mm)
or 36 mm distance from closed position (LG = 400-700 mm).
The maximum width of the drawer is the slide length (LG) + 200 mm.

Sold in pairs.

Produced mainly in stainless steel, for a complete description of the materials contact us.

Part number	Material	Finish	K	LG	A	B	C	D	E	F	G	H	CN	Weight (g)
21-7-3584	304 stainless steel	raw	265	300	145	-	-	-	-	-	-	174	16	390
21-7-3585	304 stainless steel	raw	340	350	151	-	-	-	-	-	-	224	16	465
21-7-3586	304 stainless steel	raw	400	400	167	-	-	-	96	-	-	256	20	535
21-7-3587	304 stainless steel	raw	450	450	119	215	-	-	128	-	-	306	30	605
21-7-3588	304 stainless steel	raw	500	500	119	279	-	-	96	160	-	344	35	680
21-7-3589	304 stainless steel	raw	550	550	119	215	311	-	96	160	-	394	35	730
21-7-3590	304 stainless steel	raw	600	600	119	247	375	-	128	192	-	444	35	830
21-7-3591	304 stainless steel	raw	650	650	119	215	311	407	128	224	416	494	35	905
21-7-3592	304 stainless steel	raw	700	700	119	215	343	471	128	224	480	544	35	980

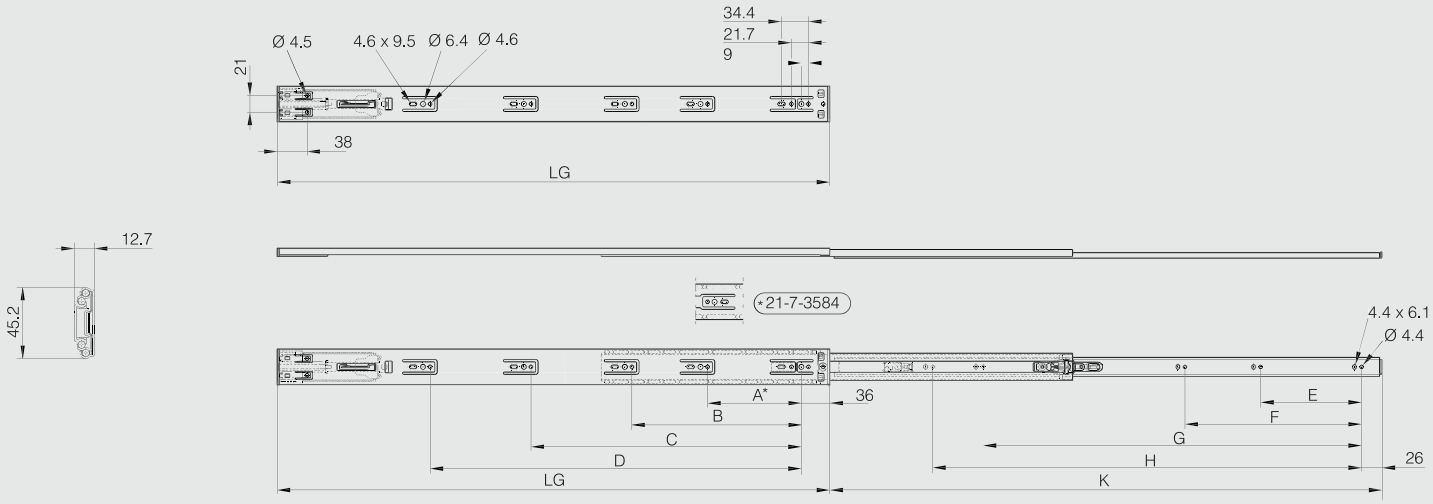

ALUMINIUM RANGE

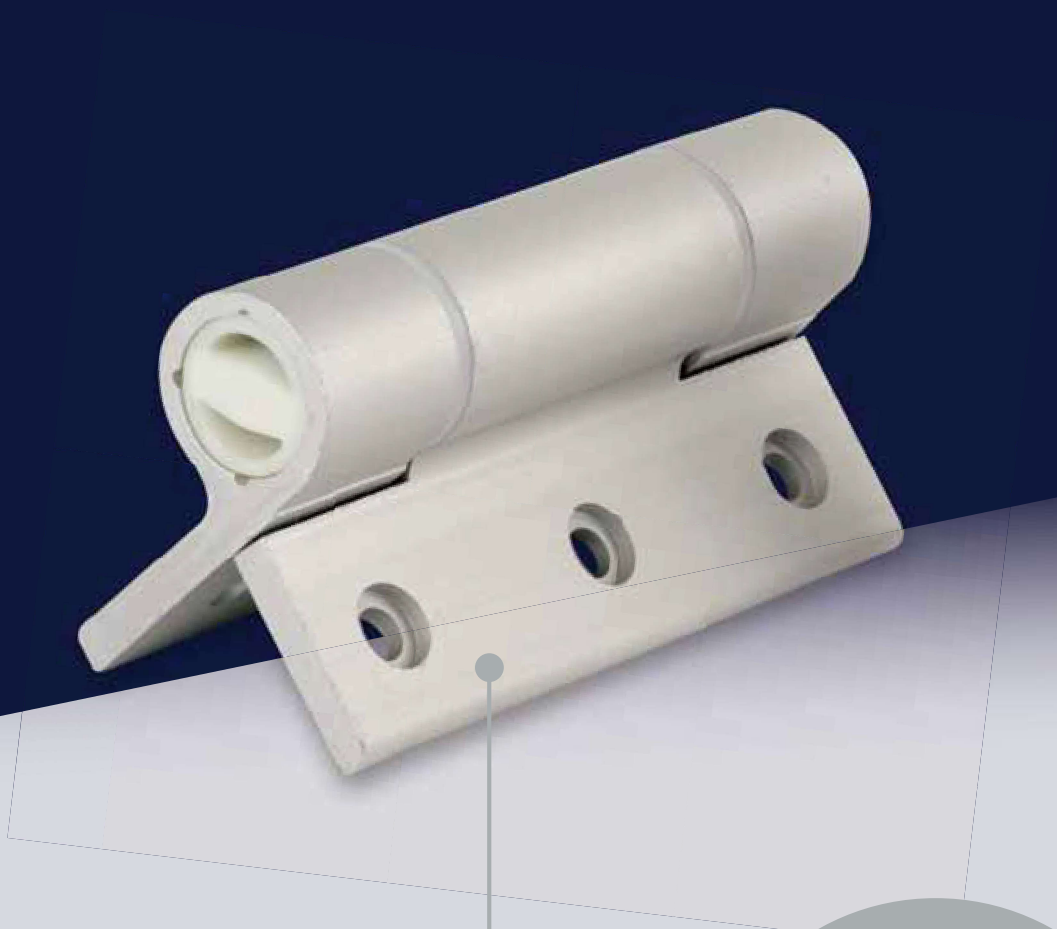

HINGES

NEW		FinAlu® continuous hinge	539
		Aluminium profile continuous hinge - 50 mm	540
		Rolled knuckle continuous hinge - 20 mm width	541
		Rolled knuckle continuous hinge - 25 mm width	541
		Rolled knuckle continuous hinge - 30 mm width	541
		Rolled knuckle continuous hinge - 35 mm width	542
		Rolled knuckle continuous hinge - 40 mm width	542
		Rolled knuckle continuous hinge - 50 mm width	542
		Rolled knuckle continuous hinge - 60 mm width	543
		Rolled knuckle continuous hinge - 80 mm width	543
		Rolled knuckle continuous hinge - 100 mm width	543
		Double knuckle continuous hinge	544
NEW		Spring hinges - aluminium profile 0.20 N.m - diameter 8	545
NEW		Spring hinges - aluminium profile 0.50 N.m - diameter 8	545
NEW		Spring hinges - aluminium profile 0.70 N.m - diameter 8	546
NEW	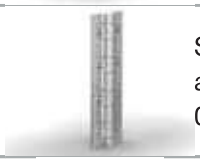	Spring hinges - aluminium profile 0.90 N.m - diameter 8	546
NEW		Spring hinges - aluminium profile 0.35 N.m - diameter 13	547
NEW		Spring hinges - aluminium profile 0.70 N.m - diameter 13	548
NEW		Spring hinges - aluminium profile 1.3 N.m - diameter 13	549
NEW		Spring hinges - aluminium profile 3.80 N.m - diameter 18	550
		Spring hinges 50 mm long	550
NEW		Opening spring hinges 120 mm long	551
NEW		Closing spring hinges 120 mm long	551
NEW		Spring hinges with soft-close dampening	552
NEW		Soft-close dampening hinges in aluminium	553

		Small friction hinges - adjustable	554
NEW		Large friction hinges - adjustable	554
		One way torque hinge - constant torque 9 N.m / set	555
		Hi-Klik™ detent hinges - small	556
		Hi-Klik™ detent hinges - large	556
		Round top weld-on aluminium hinges - stainless steel pin - stainless steel washer	557
NEW		Small FinAlu® hinges	558
NEW		Aluminium profile hinges 30 x 35 mm	559
NEW		Aluminium profile hinges 60 x 35 mm	559
NEW		Aluminium profile hinges 90 x 35 mm	560
NEW		Aluminium profile hinges 120 x 35 mm	560
		Aluminium profile hinges - diameter 13	561
		Heavy duty aluminium profile hinges	561
		Aluminium hinges - 50 mm width	562
		Aluminium hinges with reversed leaves - 50 mm width	562
		Clean room lift-off hinges 65 x 60 mm	563
		Aluminium lift-off hinges 80 x 80 mm	563
		Aluminium lift-off hinges 100 x 100 mm	564
		Lift-off hinges in aluminium profile with a stainless steel pin	565

LATCHING SYSTEMS

NEW		Springloaded bolt with locking system in aluminium - small dimension	566
		Springloaded bolt with locking system in aluminium	566
NEW		Strike for spring-loaded bolt and barrel bolt in aluminium	567
NEW		Barrel bolt in aluminium - small dimension	568
		Barrel bolt in aluminium	568

HANDLES

	Rear mounted grab handles 92 and 108 mm	**569**
	Rear mounted grab handles 52 to 120 mm	**569**
	Black aluminium rear mounted grab handles 75 to 150 mm	**570**
	Black aluminium rear mounted grab handles 88 to 120 mm	**570**
	Flush handles 105 x 63.5 mm	**571**
	Flush handle 120 x 91 mm	**571**

FinAlu® continuous hinge

NEW

270° ALU RoHS

Continuous hinges in aluminium profile with a small pin diameter.
This nice design can be used in many applications (medical, electronic enclosures, food equipment, transportation...).
These hinges have the same dimensions as hinges used in the aircraft industry.

	Part number	Material	Finish	A	B	C	D	E	Pin material	Note	Weight (g)
	72-1-4243	6082 T5 alu	anodised	915	31.75	1.3	2.2	12.7	stainless steel	undrilled	150
NS	72-1-4338	6082 T5 alu	blue anodised	915	31.75	1.3	2.2	12.7	stainless steel	undrilled	150
NS	72-1-4339	6082 T5 alu	red anodised	915	31.75	1.3	2.2	12.7	stainless steel	undrilled	150
NS	72-1-4340	6082 T5 alu	bronze anodised	915	31.75	1.3	2.2	12.7	stainless steel	undrilled	150
NS	72-1-4341	6082 T5 alu	gold anodised	915	31.75	1.3	2.2	12.7	stainless steel	undrilled	150
	72-1-4244	6082 T5 alu	raw	1830	31.75	1.3	2.2	12.7	stainless steel	undrilled	300
NEW	72-1-4418	6082 T5 alu	anodised	915	38.1	1.3	2.2	12.7	stainless steel	undrilled	170
NEW	72-1-4419	6082 T5 alu	raw	1830	38.1	1.3	2.2	12.7	stainless steel	undrilled	340
	72-1-4245	6082 T5 alu	anodised	915	44.45	1.3	2.2	12.7	stainless steel	undrilled	190
NS	72-1-4342	6082 T5 alu	blue anodised	915	44.45	1.3	2.2	12.7	stainless steel	undrilled	190
NS	72-1-4343	6082 T5 alu	red anodised	915	44.45	1.3	2.2	12.7	stainless steel	undrilled	190
NS	72-1-4344	6082 T5 alu	bronze anodised	915	44.45	1.3	2.2	12.7	stainless steel	undrilled	190
NS	72-1-4345	6082 T5 alu	gold anodised	915	44.45	1.3	2.2	12.7	stainless steel	undrilled	190
	72-1-4246	6082 T5 alu	raw	1830	44.45	1.3	2.2	12.7	stainless steel	undrilled	380
	72-1-4247	6082 T5 alu	anodised	915	63.5	1.3	2.2	12.7	stainless steel	undrilled	250
NS	72-1-4346	6082 T5 alu	blue anodised	915	63.5	1.3	2.2	12.7	stainless steel	undrilled	250
NS	72-1-4347	6082 T5 alu	red anodised	915	63.5	1.3	2.2	12.7	stainless steel	undrilled	250
NS	72-1-4348	6082 T5 alu	bronze anodised	915	63.5	1.3	2.2	12.7	stainless steel	undrilled	250
NS	72-1-4349	6082 T5 alu	gold anodised	915	63.5	1.3	2.2	12.7	stainless steel	undrilled	250
	72-1-4248	6082 T5 alu	raw	1830	63.5	1.3	2.2	12.7	stainless steel	undrilled	500

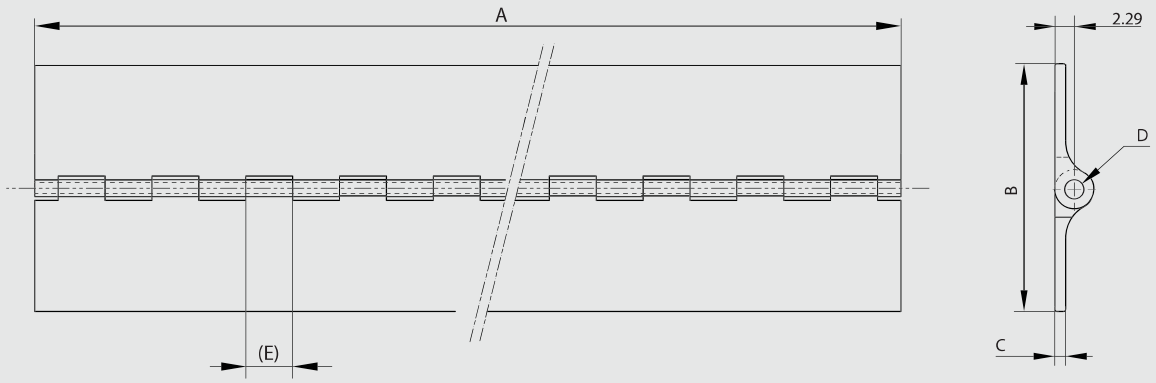

Aluminium profile continuous hinge - 50 mm

270° ALU RoHS

Opening angle 270°. Other lengths are available on request.
Specific drilling requirements are also available on request.

Part number	Material	Finish	A	B	C	D	E	Pin material	Note	Weight (g)
72-1-3316	6060 T5 alu	raw	2000	50	3	5.2	35.5	304 stainless steel	undrilled	1200

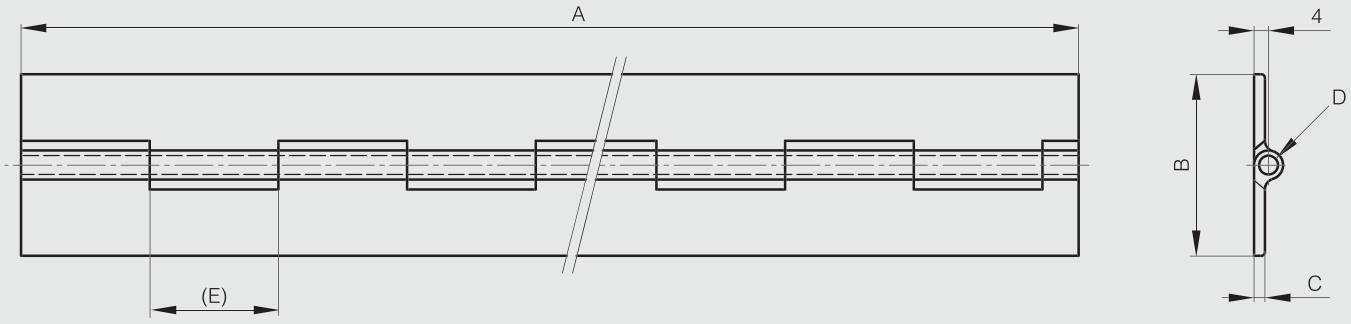

Rolled knuckle continuous hinge - 20 mm width

270° ALU RoHS

Opening angle 270°. Other lengths and pin materials are available on request.
Specific drilling requirements are also available on request.

Part number	Material	Finish	A	B	C	D	E	Pin material	Note	Weight (g)
41-1-3529	5754 alu	raw	2000	20	0.6	2.4	15	steel	undrilled	150

Rolled knuckle continuous hinge - 25 mm width

270° ALU RoHS

Opening angle 270°. Other lengths and pin materials are available on request.
Specific drilling requirements are also available on request.

Part number	Material	Finish	A	B	C	D	E	Pin material	Note	Weight (g)
41-1-3559	5754 alu	raw	1000	25	0.8	2	15	steel	undrilled	90

Rolled knuckle continuous hinge - 30 mm width

270° ALU RoHS

Opening angle 270°. Other lengths and pin materials are available on request.
Specific drilling requirements are also available on request.

Part number	Material	Finish	A	B	C	D	E	Pin material	Note	Weight (g)
41-1-3560	5754 alu	raw	1980	30	1	2	15	aluminium	undrilled	205

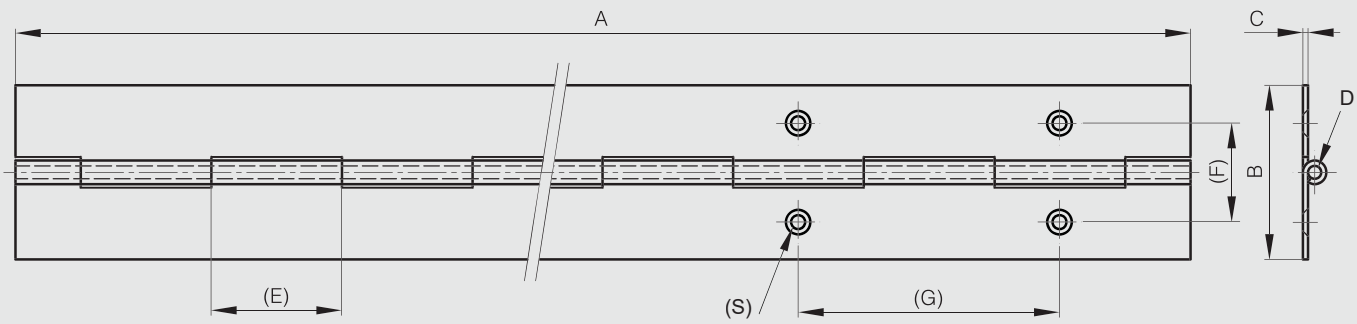

Rolled knuckle continuous hinge - 35 mm width

270° ALU RoHS

Opening angle 270°. Other lengths and pin materials are available on request.
Specific drilling requirements are also available on request.

Part number	Material	Finish	A	B	C	D	E	Pin material	Note	Weight (g)
41-1-3532	5754 alu	raw	1995	35	1	3	30	aluminium	undrilled	262

Rolled knuckle continuous hinge - 40 mm width

270° ALU RoHS

Opening angle 270°. Other lengths and pin materials are available on request.
Specific drilling requirements are also available on request.

Part number	Material	Finish	A	B	C	D	E	Pin material	Note	Weight (g)
41-1-3540	5754 alu	raw	1000	40	1.2	3	30	aluminium	undrilled	180
41-1-3520	5754 alu	raw	2040	40	1.2	3	30	aluminium	undrilled	356
41-1-3521	5754 alu	raw	2000	40	1.5	4	15	aluminium	undrilled	500

Rolled knuckle continuous hinge - 50 mm width

270° ALU RoHS

Opening angle 270°. Other lengths and pin materials are available on request.
Specific drilling requirements are also available on request.

Part number	Material	Finish	A	B	C	D	E	Pin material	Note	Weight (g)
41-1-3531	5754 alu	raw	2040	50	1.2	3	30	aluminium	undrilled	459
41-1-3541	5754 alu	raw	1000	50	1.5	4	15	aluminium	undrilled	306
41-1-3522	5754 alu	raw	2000	50	1.5	4	15	aluminium	undrilled	612

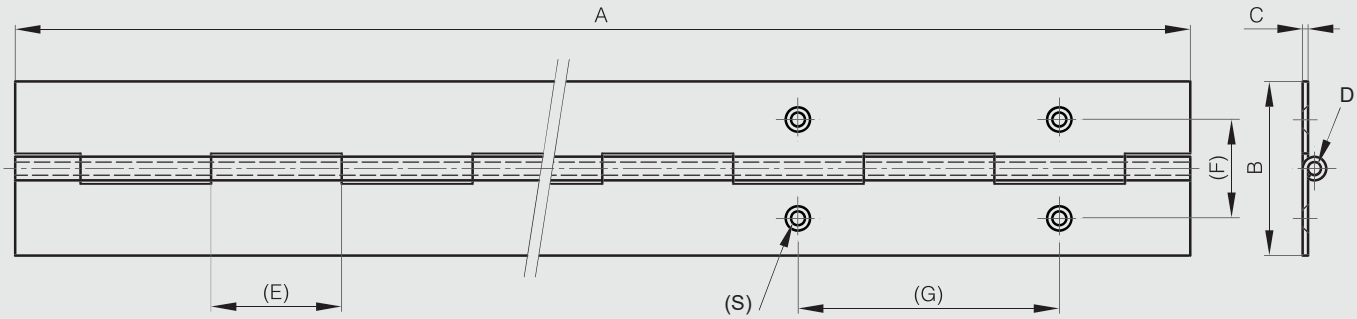

Rolled knuckle continuous hinge - 60 mm width

270° ALU RoHS

Opening angle 270°. Other lengths and pin materials are available on request.
Specific drilling requirements are also available on request.

Part number	Material	Finish	A	B	C	D	E	Pin material	Note	Weight (g)
41-1-3523	5754 alu	raw	1995	60	2	6	30	aluminium	undrilled	998

Rolled knuckle continuous hinge - 80 mm width

270° ALU RoHS

Opening angle 270°. Other lengths and pin materials are available on request.
Specific drilling requirements are also available on request.

Part number	Material	Finish	A	B	C	D	E	Pin material	Note	Weight (g)
41-1-3558	5754 alu	raw	1995	80	3	6	40	aluminium	undrilled	1780

Rolled knuckle continuous hinge - 100 mm width

270° ALU RoHS

Opening angle 270°. Other lengths and pin materials are available on request.
Specific drilling requirements are also available on request.

Part number	Material	Finish	A	B	C	D	E	Pin material	Note	Weight (g)
41-1-3561	5754 alu	raw	1000	100	4	10	40	steel	undrilled	2030

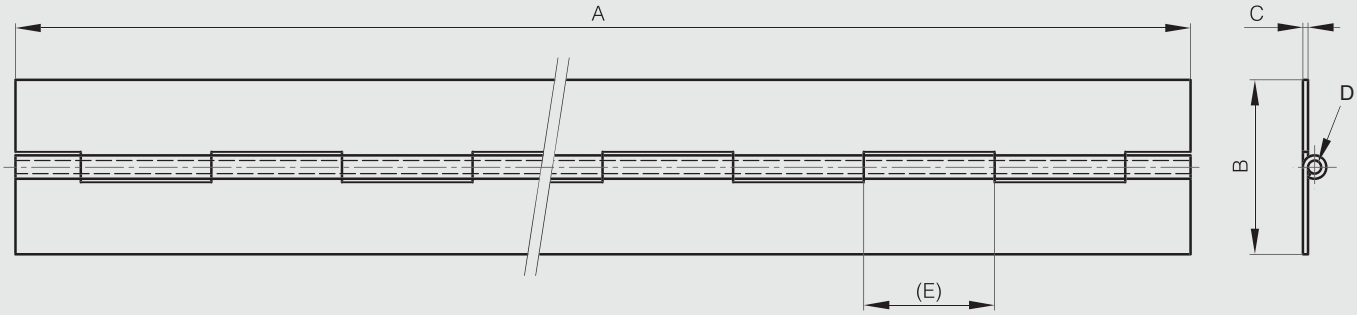

Double knuckle continuous hinge

180° ALU RoHS

Hinge in aluminium profile for 180° opening angle.
Delivered without watertight gasket (to be ordered separately).
With fixed friction washers.
Non-drilled hinges.

Part number	Material	Finish	A	D	K	Pin material	Weight (g)
73-1-3520	6060 T5 alu	clear anodised	2000	5	65	304 stainless steel	2500
73-1-3521	6060 T5 alu	clear anodised	2500	5	15	304 stainless steel	3140
73-1-3522	6060 T5 alu	clear anodised	3000	5	115	304 stainless steel	3780

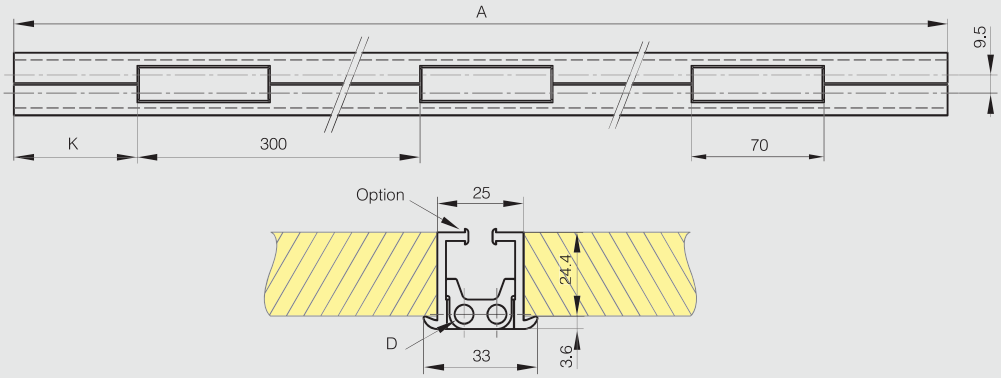

Spring hinges - aluminium profile 0.20 N.m - diameter 8

NEW

180° ALU RoHS

Opening spring force:
M(0°): 0.23 N.m / M(90°): 0.15 N.m / M(180°): 0.08 N.m
Closing spring force:
M(0°): 0.08 N.m / M(90°): 0.15 N.m / M(180°): 0.23 N.m

2 other versions available: with friction or with detent mechanism.

	Part number	Material	Finish	A	B	C	D	Note	Weight (g)
	72-1-4256	6060 T5 alu	clear anodised	30	35	3.3	8	opening spring	10
	72-1-4257	6060 T5 alu	black anodised	30	35	3.3	8	opening spring	10
NS	72-1-4318	6060 T5 alu	clear anodised	30	35	3.3	8	opening spring / with M3 studs	13
NS	72-1-4319	6060 T5 alu	black anodised	30	35	3.3	8	opening spring / with M3 studs	13
	72-1-4275	6060 T5 alu	clear anodised	30	35	3.3	8	closing spring	10
	72-1-4276	6060 T5 alu	black anodised	30	35	3.3	8	closing spring	10
NS	72-1-4333	6060 T5 alu	clear anodised	30	35	3.3	8	closing spring / with M3 studs	13
NS	72-1-4334	6060 T5 alu	black anodised	30	35	3.3	8	closing spring / with M3 studs	13

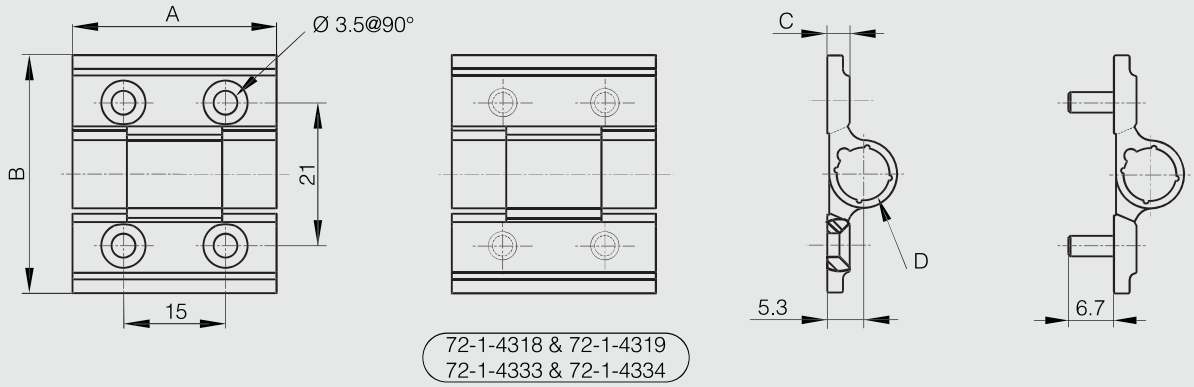

Spring hinges - aluminium profile 0.50 N.m - diameter 8

NEW

180° ALU RoHS

Opening spring force:
M(0°): 0.48 N.m / M(90°): 0.3 N.m / M(180°): 0.16 N.m

	Part number	Material	Finish	A	B	C	D	Note	Weight (g)
NEW	72-1-4309	6060 T5 alu	clear anodised	60	35	3.3	8	opening spring	20
NEW	72-1-4310	6060 T5 alu	black anodised	60	35	3.3	8	opening spring	20

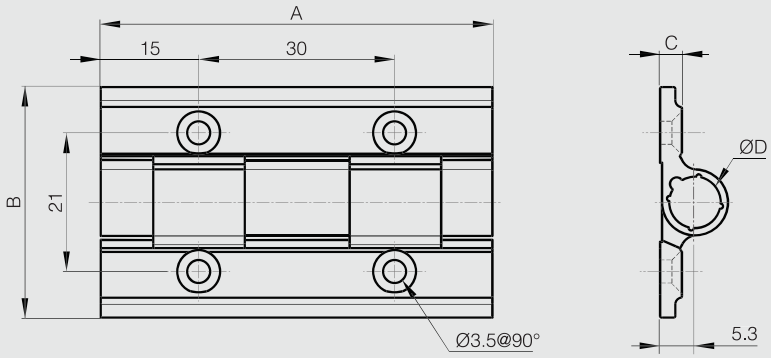

Spring hinges - aluminium profile 0.70 N.m - diameter 8

NEW

180° ALU RoHS

Opening spring force:
M(0°): 0.7 N.m / M(90°): 0.5 N.m / M(180°): 0.3 N.m

	Part number	Material	Finish	A	B	C	D	Note	Weight (g)
NEW	72-1-4314	6060 T5 alu	clear anodised	90	35	3.3	8	opening spring	40
NEW	72-1-4315	6060 T5 alu	black anodised	90	35	3.3	8	opening spring	40

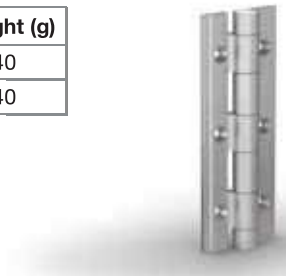

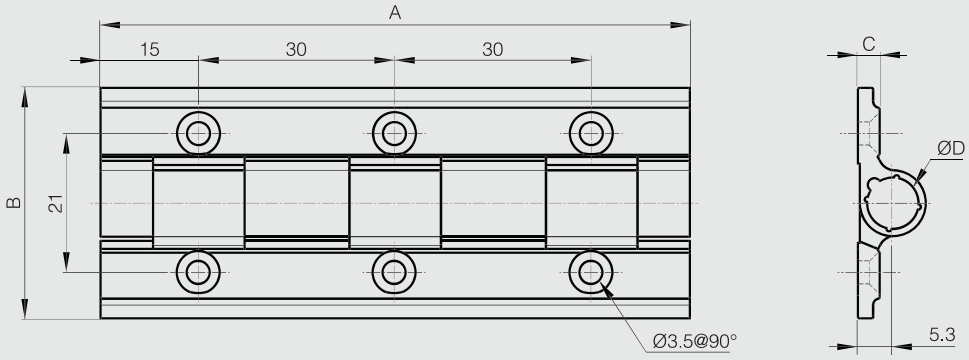

Spring hinges - aluminium profile 0.90 N.m - diameter 8

NEW

180° ALU RoHS

Opening spring force:
M(0°): 0.92 N.m / M(90°): 0.7 N.m / M(180°): 0.44 N.m

	Part number	Material	Finish	A	B	C	D	Note	Weight (g)
NEW	72-1-4316	6060 T5 alu	clear anodised	120	35	3.3	8	opening spring	50
NEW	72-1-4317	6060 T5 alu	black anodised	120	35	3.3	8	opening spring	50

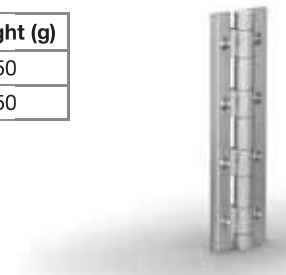

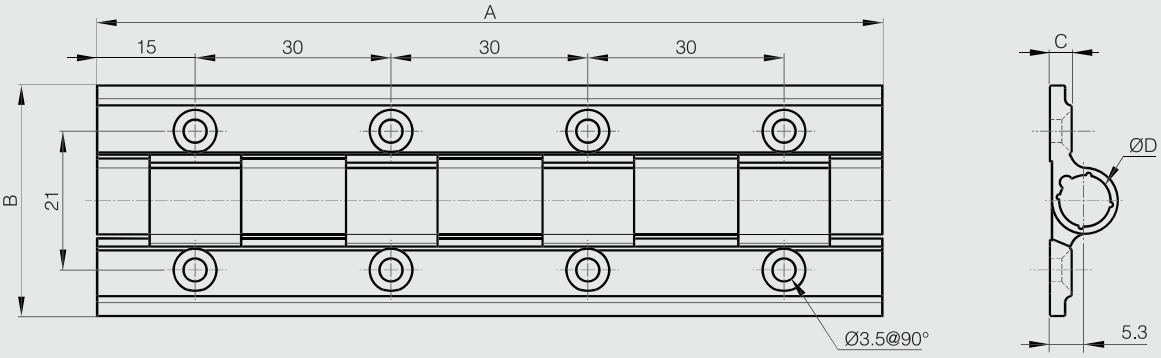

Spring hinges - aluminium profile 0.35 N.m - diameter 13

NEW

180° ALU RoHS

Opening spring force:
M(0°): 0.35 N.m / M(90°): 0.24 N.m / M(180°): 0.12 N.m
Closing spring force:
M(0°): 0.12 N.m / M(90°): 0.24 N.m / M(180°): 0.35 N.m

3 other versions available: free swinging, with friction or with detent mechanism.

	Part number	Material	Finish	A	B	C	D	Note	Weight (g)
	72-1-4220	6060 T5 alu	clear anodised	67	55	4.5	13	opening spring	62
	72-1-4221	6060 T5 alu	black anodised	67	55	4.5	13	opening spring	60
	72-1-4292	6060 T5 alu	clear anodised	67	55	4.5	13	opening spring/ delivered flat	63
	72-1-4293	6060 T5 alu	black anodised	67	55	4.5	13	opening spring/ delivered flat	63
NS	72-1-4366	6060 T5 alu	blue anodised	67	55	4.5	13	opening spring/ delivered flat	60
NS	72-1-4367	6060 T5 alu	red anodised	67	55	4.5	13	opening spring/ delivered flat	60
NS	72-1-4368	6060 T5 alu	bronze anodised	67	55	4.5	13	opening spring/ delivered flat	60
NS	72-1-4369	6060 T5 alu	gold anodised	67	55	4.5	13	opening spring/ delivered flat	60
NEW	72-1-4323	6060 T5 alu	clear anodised	67	55	4.5	13	opening spring / delivered flat / with M6 studs	80
NEW	72-1-4324	6060 T5 alu	black anodised	67	55	4.5	13	opening spring / delivered flat / with M6 studs	80
	72-1-4286	6060 T5 alu	clear anodised	67	55	4.5	13	closing spring	63
	72-1-4287	6060 T5 alu	black anodised	67	55	4.5	13	closing spring	63
NS	72-1-4370	6060 T5 alu	blue anodised	67	55	4.5	13	closing spring	60
NS	72-1-4371	6060 T5 alu	red anodised	67	55	4.5	13	closing spring	60
NS	72-1-4372	6060 T5 alu	bronze anodised	67	55	4.5	13	closing spring	60
NS	72-1-4373	6060 T5 alu	gold anodised	67	55	4.5	13	closing spring	60
NS	72-1-4336	6060 T5 alu	clear anodised	67	55	4.5	13	closing spring / with M6 studs	79
NS	72-1-4337	6060 T5 alu	black anodised	67	55	4.5	13	closing spring / with M6 studs	79

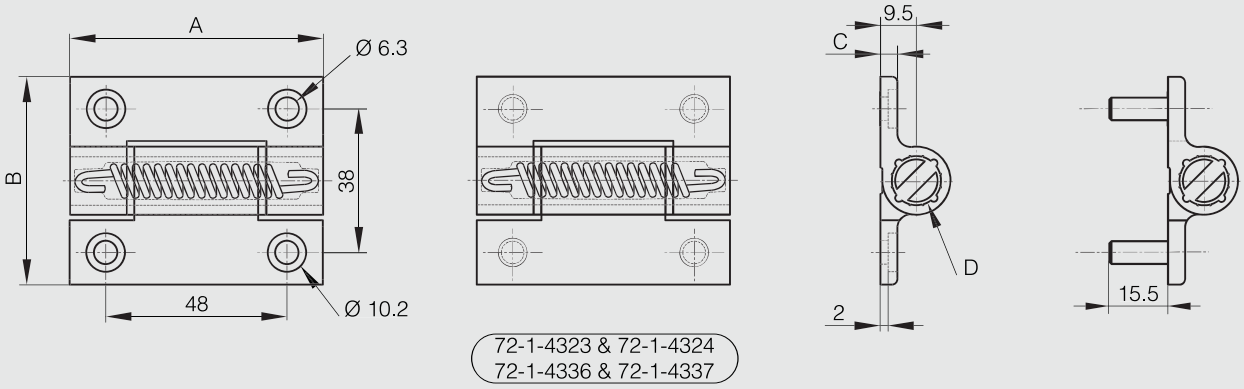

Spring hinges - aluminium profile 0.70 N.m - diameter 13

NEW

180° ALU RoHS

Opening spring force:
M(0°): 0.7 N.m / M(90°): 0.45 N.m / M(180°): 0.23 N.m
Closing spring force:
M(0°): 0.23 N.m / M(90°): 0.45 N.m / M(180°): 0.7 N.m

3 other versions available: free swinging, with friction or with detent mechanism.

	Part number	Material	Finish	A	B	C	D	Note	Weight (g)
	72-1-4218	6060 T5 alu	clear anodised	67	55	4.5	13	opening spring	68
	72-1-4219	6060 T5 alu	black anodised	67	55	4.5	13	opening spring	66
	72-1-4294	6060 T5 alu	clear anodised	67	55	4.5	13	opening spring / delivered flat	66
	72-1-4295	6060 T5 alu	black anodised	67	55	4.5	13	opening spring / delivered flat	66
NS	72-1-4374	6060 T5 alu	blue anodised	67	55	4.5	13	opening spring/ delivered flat	66
NS	72-1-4375	6060 T5 alu	red anodised	67	55	4.5	13	opening spring/ delivered flat	66
NS	72-1-4376	6060 T5 alu	bronze anodised	67	55	4.5	13	opening spring/ delivered flat	66
NS	72-1-4377	6060 T5 alu	gold anodised	67	55	4.5	13	opening spring/ delivered flat	66
NEW	72-1-4325	6060 T5 alu	clear anodised	67	55	4.5	13	opening spring / delivered flat / with M6 studs	85
NEW	72-1-4326	6060 T5 alu	black anodised	67	55	4.5	13	opening spring / delivered flat / with M6 studs	85
	72-1-4272	6060 T5 alu	clear anodised	67	55	4.5	13	closing spring	65
	72-1-4273	6060 T5 alu	black anodised	67	55	4.5	13	closing spring	65
NS	72-1-4378	6060 T5 alu	blue anodised	67	55	4.5	13	closing spring	65
NS	72-1-4379	6060 T5 alu	red anodised	67	55	4.5	13	closing spring	65
NS	72-1-4380	6060 T5 alu	bronze anodised	67	55	4.5	13	closing spring	65
NS	72-1-4381	6060 T5 alu	gold anodised	67	55	4.5	13	closing spring	65
NEW	72-1-4322	6060 T5 alu	clear anodised	67	55	4.5	13	closing spring / with M6 studs	84
NS	72-1-4335	6060 T5 alu	black anodised	67	55	4.5	13	closing spring / with M6 studs	84

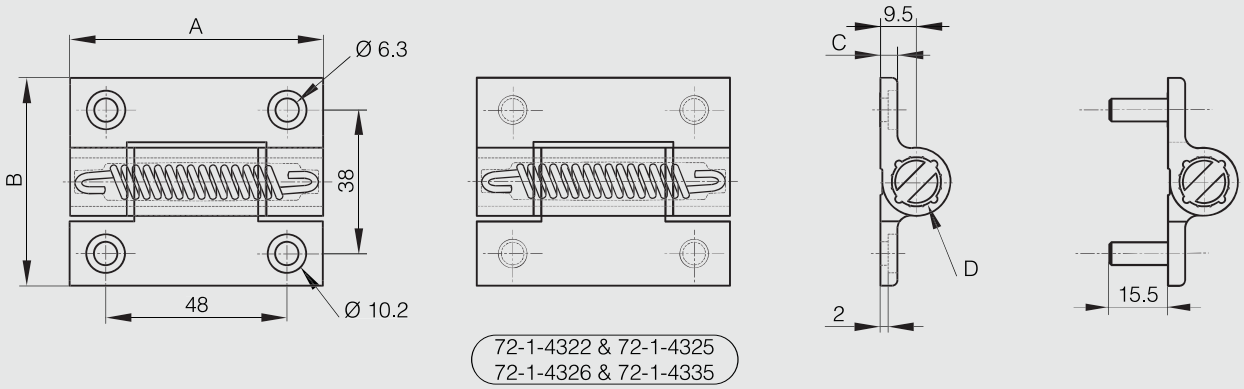

Spring hinges - aluminium profile 1.3 N.m - diameter 13

NEW

180° ALU RoHS

Opening spring force:
M(0°): 1.3 N.m / M(90°): 1.1 N.m / M(180°): 0.9 N.m
Closing spring force:
M(0°): 0.5 N.m / M(90°): 0.7 N.m / M(180°): 1 N.m

3 other versions available: free swinging, with friction or with detent mechanism.

	Part number	Material	Finish	A	B	C	D	Note	Weight (g)
	72-1-4222	6060 T5 alu	clear anodised	67	55	4.5	13	opening spring	68
	72-1-4223	6060 T5 alu	black anodised	67	55	4.5	13	opening spring	68
	72-1-4296	6060 T5 alu	clear anodised	67	55	4.5	13	opening spring / delivered flat	68
	72-1-4297	6060 T5 alu	black anodised	67	55	4.5	13	opening spring / delivered flat	68
NS	72-1-4382	6060 T5 alu	blue anodised	67	55	4.5	13	opening spring/ delivered flat	68
NS	72-1-4383	6060 T5 alu	red anodised	67	55	4.5	13	opening spring/ delivered flat	68
NS	72-1-4384	6060 T5 alu	bronze anodised	67	55	4.5	13	opening spring/ delivered flat	68
NS	72-1-4385	6060 T5 alu	gold anodised	67	55	4.5	13	opening spring/ delivered flat	68
NEW	72-1-4327	6060 T5 alu	clear anodised	67	55	4.5	13	opening spring / delivered flat / with M6 studs	87
NEW	72-1-4328	6060 T5 alu	black anodised	67	55	4.5	13	opening spring / delivered flat / with M6 studs	87
	72-1-4260	6060 T5 alu	clear anodised	67	55	4.5	13	closing spring	67
	72-1-4261	6060 T5 alu	black anodised	67	55	4.5	13	closing spring	67
NS	72-1-4386	6060 T5 alu	blue anodised	67	55	4.5	13	closing spring	67
NS	72-1-4387	6060 T5 alu	red anodised	67	55	4.5	13	closing spring	67
NS	72-1-4388	6060 T5 alu	bronze anodised	67	55	4.5	13	closing spring	67
NS	72-1-4389	6060 T5 alu	gold anodised	67	55	4.5	13	closing spring	67
NEW	72-1-4320	6060 T5 alu	clear anodised	67	55	4.5	13	closing spring / with M6 studs	86
NEW	72-1-4321	6060 T5 alu	black anodised	67	55	4.5	13	closing spring / with M6 studs	86

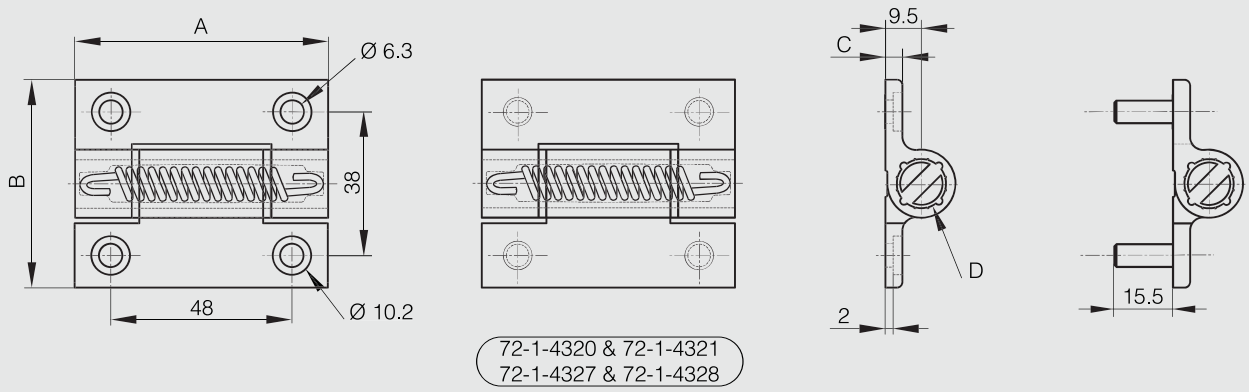

Spring hinges - aluminium profile 3.80 N.m - diameter 18

NEW

180° ALU RoHS

Opening spring force:
M(0°): 3.80 N.m / M(90°): 3.10 N.m / M(180°): 2.40 N.m
Closing spring force:
M(0°): 2.20 N.m / M(90°): 2.90 N.m / M(180°): 3.50 N.m

Free swinging hinge without spring available (part number: 72-1-4241 in colorless or 72-1-4242 in black).

	Part number	Material	Finish	A	B	C	D	Note	Weight (g)
	72-1-4231	6082 T5 alu	clear anodised	100	82.5	5.5	18	opening spring	185
	72-1-4232	6082 T5 alu	black anodised	100	82.5	5.5	18	opening spring	183
	72-1-4258	6082 T5 alu	clear anodised	100	82.5	5.5	18	closing spring	191
	72-1-4259	6082 T5 alu	black anodised	100	82.5	5.5	18	closing spring	191
NEW	72-1-4331	6082 T5 alu	clear anodised	100	82.5	5.5	18	closing spring / with M6 studs	188
NEW	72-1-4332	6082 T5 alu	black anodised	100	82.5	5.5	18	closing spring / with M6 studs	188

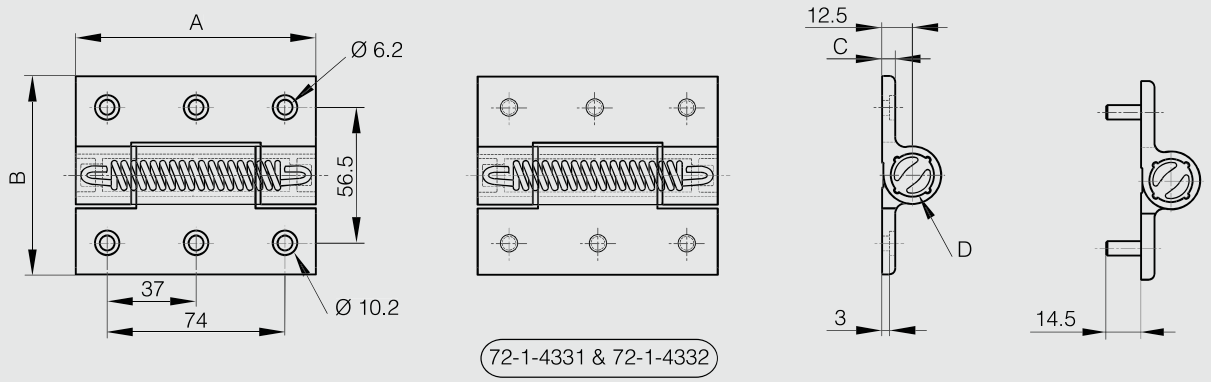

Spring hinges 50 mm long

270° ALU RoHS

Opening spring force:
M(0°): 1.5 N.m / M(90°): 1.1 N.m / M(180°): 0.65 N.m

Closing spring force:
M(0°): 0.25 N.m / M(90°): 0.65 N.m / M(180°): 1.1 N.m

Part number	Material	Finish	A	B	C	D	F	G	S	Note	Weight (g)
71-1-3856	5754 alu	raw	50	50	2	4	9	30	5	Bezinal steel opening spring	22
71-1-3857	5754 alu	raw	50	50	2	4	9	30	5	Bezinal steel closing spring	22

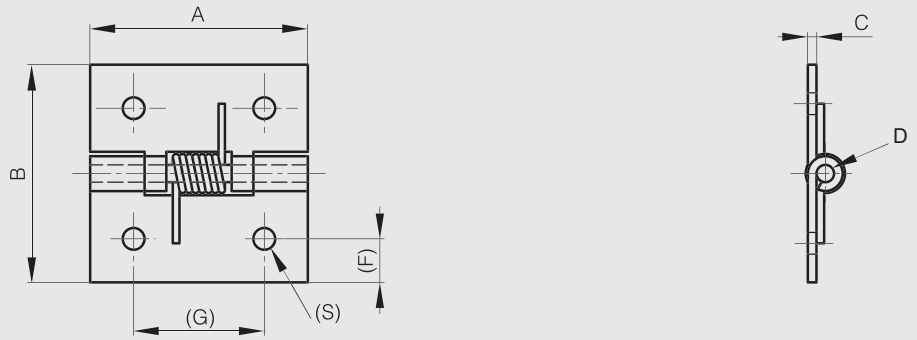

Opening spring hinges 120 mm long

NEW

270° ALU RoHS

Opening spring force:
M(0°): 0.85 N.m / M(90°): 0.56 N.m / M(180°): 0.28 N.m

Stainless steel spring.

	Part number	Material	Finish	A	B	C	D	F	G	S	Note	Weight (g)
	71-1-3860	5754 alu	raw	120	40	1.5	4				undrilled	45
	71-1-3861	5754 alu	raw	120	40	1.5	4	22.7	60	4	drilled	45
NS	**71-1-3887**	5754 alu	raw	120	40	1.5	4	22.7	60	4	with M5 studs	57

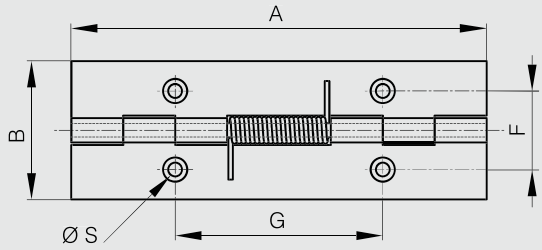

71-1-3793 & 71-1-3805 & 71-1-3861

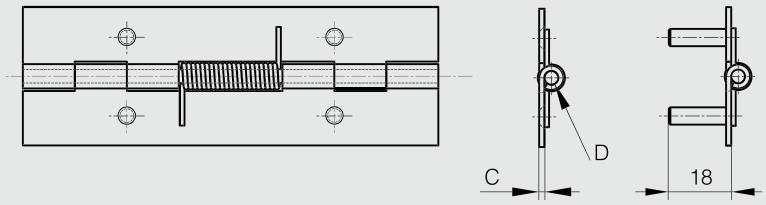

71-1-3879 & 71-1-3885 & 71-1-3887

Closing spring hinges 120 mm long

NEW

270° ALU RoHS

Closing spring force:
M(0°): 0.28 N.m / M(90°): 0.56 N.m / M(180°): 0.85 N.m

Stainless steel spring.

	Part number	Material	Finish	A	B	C	D	F	G	S	Note	Weight (g)
	71-1-3862	5754 alu	raw	120	40	1.5	4				undrilled	45
	71-1-3863	5754 alu	raw	120	40	1.5	4	22.7	60	4	drilled	45
NS	**71-1-3888**	5754 alu	raw	120	40	1.5	4	22.7	60	4	with M5 studs	57

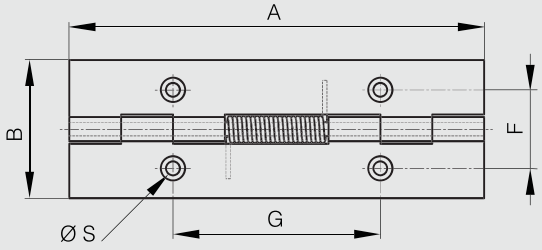

71-1-3796 & 71-1-3808 & 71-1-3863

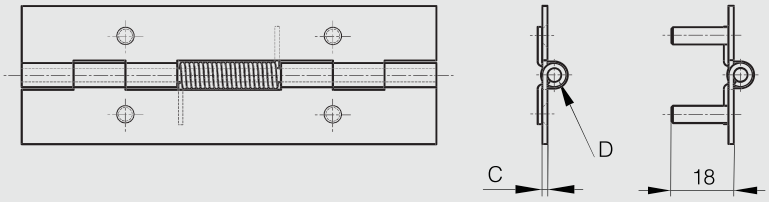

71-1-3880 & 71-1-3886 & 71-1-3888

Spring hinges with soft-close dampening

NEW

115° ALU RoHS

2 versions : opening spring version (75-1-0008) or closing spring version (75-1-0009).
For horizontal application.
Easy to lift heavy top-opening due to spring tension (lift-assist).

- Damper working direction: shown by the arrow in the drawing.
- In order not to damage the damping system, the opening angle is limited to 115° by an integrated stop.
- Do not force the door to close faster in damper effective direction. It can cause damage to the product.
- Damping works correctly when the door is opened more than 90 ° before being released (priming).

- Torque damping from 1.7 to 2.5 N.m.
- Spring torque is different depending on part number :
Opening spring torque for 75-1-0008 : M(180°) : 2.70 Nm / M(65°) : 3.69 Nm
Closing spring torque for 75-1-0009 : M(0°) : 2.68 Nm / M(115°) : 3.65 Nm

- Operating temperature: 0 to +40°C.

Please contact us for more information.

	Part number	Material	Finish	A	B	C	D	Torque	Note	Weight (g)
NEW	75-1-0008	6082 T5 Alu	clear anodised	150	82.5	5.5	18	1.7 – 2.5 N.m	opening spring	32
NEW	75-1-0009	6082 T5 Alu	clear anodised	150	82.5	5.5	18	1.7 – 2.5 N.m	closing spring	32

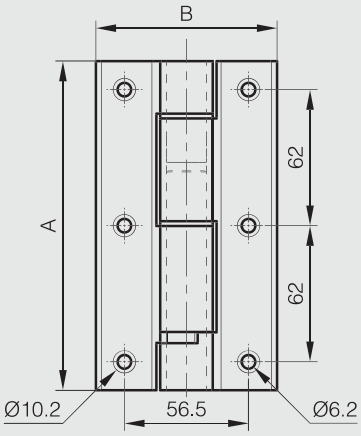

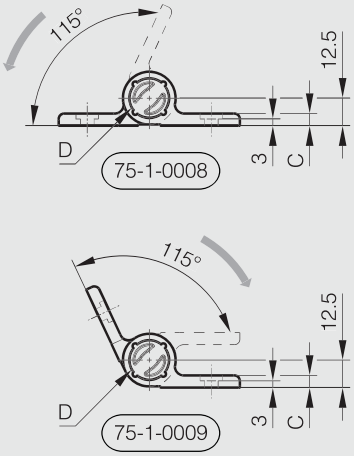

Soft-close dampening hinges in aluminium

NEW

115° ALU RoHS

- Soft-close dampening hinge: soft-close damper keeps lid from slamming shut when the hinge is moved.
- Damper working direction: shown by the arrow in the drawing.
- Operating angle: 115°.
- If the opening angle is wider than 115° (+/- 5°), mechanism is broken and damper doesn't work any longer.
- **Provide a door stopper to prevent from overturning beyond the prescribed angle range.**
- Do not force the door to close faster in damper effective direction. It can cause damage to the product.
- When the door opening angle is small, the dampers may not work smoothly.
- Torque moment (for one hinge): 2.5 to 4.5 N.m.
- Torque calculation:

Torque (N.m) = L (m) x 1/2 x W (kg) x 9.8 with:

• L = door height in metre.

• W = door weight in kilo.

- Operating temperature: 0 to +40°C.
- Soft close of a door (vertical application): door closing system.

Put together with a spring hinge with same dimension (72-1-4231 or 72-1-4232), an automatic soft close of a door is possible without any other component.

Please ask us for more information.

	Part number	Material	Finish	A	B	C	D	Torque	Note	Weight (g)
	75-1-0004	6082 T5 alu	clear anodised	100	82.5	5.5	18	2.5 - 4.5 N.m	Damper working direction when opening the hinge	175
	75-1-0006	6082 T5 alu	clear anodised	100	82.5	5.5	18	2.5 - 4.5 N.m	Damper working direction when closing the hinge	175
NEW	**75-1-0007**	6082 T5 alu	clear anodised	100	82.5	5.5	18	2.5 - 4.5 N.m	Damper working direction when closing the hinge	179

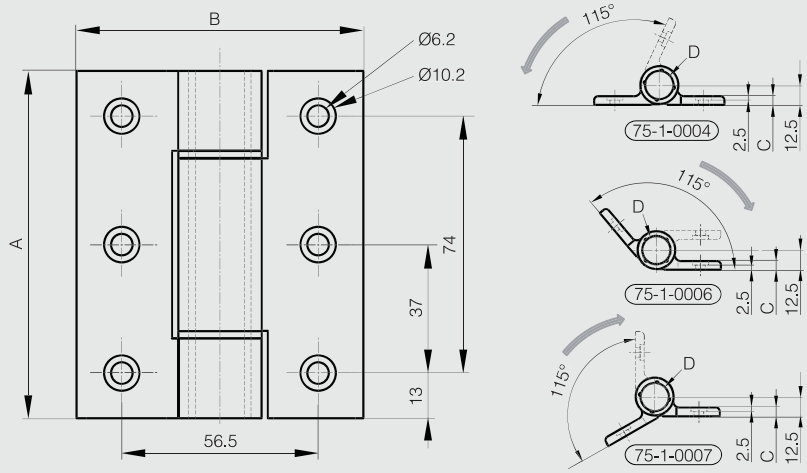

Small friction hinges - adjustable

180° ALU RoHS

Small size friction hinge to maintain a lid / door in position.
The friction torque is adjustable with a hex key.
2 other versions available: with spring or with detent function.

Part number	Material	Finish	A	B	C	D	S	Torque	Weight (g)
72-1-4136	6060 T5 alu	raw	30	35	3.3	8	3.5	0 - 1 N.m	11
72-1-4160	6060 T5 alu	clear anodised	30	35	3.3	8	3.5	0 - 1 N.m	11
72-1-4137	6060 T5 alu	black anodised	30	35	3.3	8	3.5	0 - 1 N.m	11

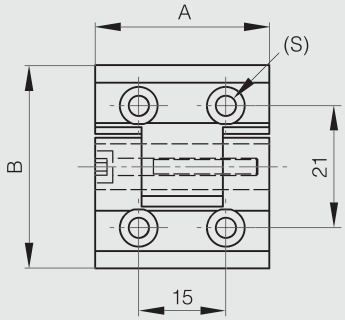

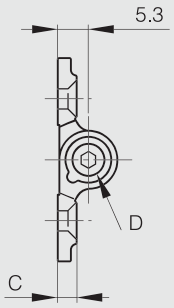

Large friction hinges - adjustable

NEW

180° ALU RoHS

Large size friction hinge to maintain a lid / door in position.
The friction torque is adjustable with a hex key.
Available with a choice of studs or holes.
3 other versions available: with spring, with detent function or free swinging.

	Part number	Material	Finish	A	B	C	D	Torque	Note	Weight (g)
	72-1-4145	6060 T5 alu	clear anodised	65	55	4.5	13	0 - 5 N.m	fixing by screw CHC M6	68
	72-1-4146	6060 T5 alu	black anodised	65	55	4.5	13	0 - 5 N.m	fixing by screw CHC M6	68
	72-1-4147	6060 T5 alu	clear anodised	65	55	4.5	13	0 - 5 N.m	fixing by M6 studs	85
	72-1-4148	6060 T5 alu	black anodised	65	55	4.5	13	0 - 5 N.m	fixing by M6 studs	85
NS	72-1-4362	6060 T5 alu	blue anodised	65	55	4.5	13	0 - 5 N.m	fixing by screw CHC M6	66
NS	72-1-4365	6060 T5 alu	gold anodised	65	55	4.5	13	0 - 5 N.m	fixing by screw CHC M6	66
NS	72-1-4363	6060 T5 alu	red anodised	65	55	4.5	13	0 - 5 N.m	fixing by screw CHC M6	66
NS	72-1-4364	6060 T5 alu	bronze anodised	65	55	4.5	13	0 - 5 N.m	fixing by screw CHC M6	66

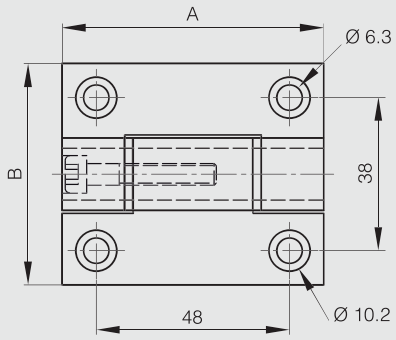

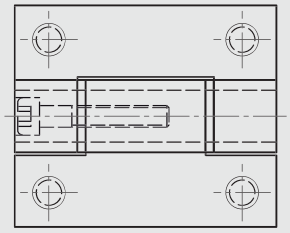

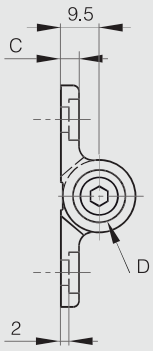

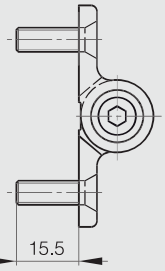

One way torque hinge - constant torque 9 N.m / set

- Aluminium torque hinge.
- Friction in one direction only: allows for frictionless handling of the door inthe opposite direction.
- Tested over 30,000 cycles.
- Torque is constant in torque direction.
- Sold in pairs (left / right).
- Ideal to prevent shock to the door and / or safety.
- Torque moment (per set): 9 N.m.
- Initial torque may vary from -20% to +40%.
- Not suited for vibration environment.
- Torque will be affected by temperature.
- Do not lubricate.
- For indoor use only.
- Body in aluminium, shaft in stainless steel, sleeve and cover in polyacetal (POM).

Part number	Material	Finish	A	B	C	D	Torque	Note	Weight (g)
72-7-4250	aluminium	anodised	77.5	60	16	21	9 N.m / set	torque in the clockwise direction sold in pairs	271
72-7-4251	aluminium	anodised	77.5	60	16	21	9 N.m / set	torque in the anti clockwise direction sold in pairs	270

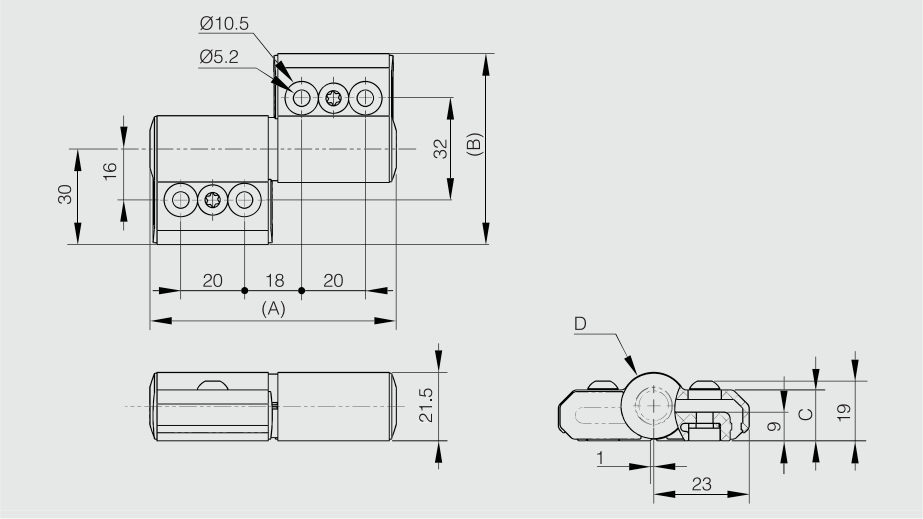

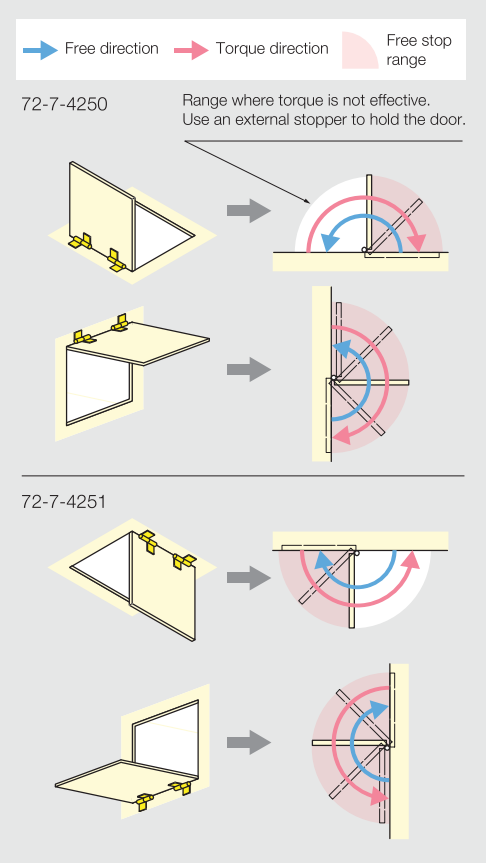

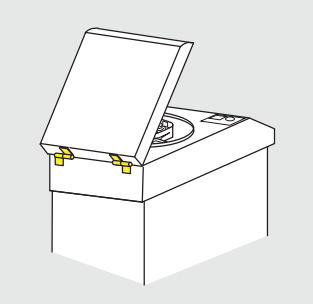

Installation

Hi-Klik™ detent hinges - small

270° ALU RoHS

Indented every 30°.
Torque is preset.
3 other versions available: free swinging, with spring or with friction mechanism.

Part number	Material	Finish	A	B	C	D	Torque	Weight (g)
72-1-4235	6060 T5 alu	clear anodised	30	35	3.3	8	0.4 N.m	10
72-1-4236	6060 T5 alu	black anodised	30	35	3.3	8	0.4 N.m	10

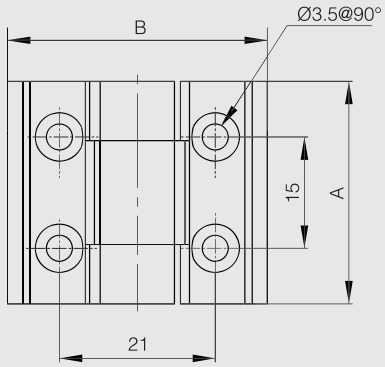

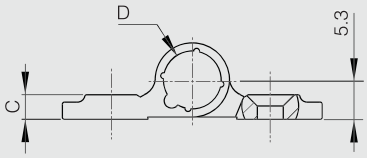

Hi-Klik™ detent hinges - large

270° ALU RoHS

Indented every 30°. 4 torque values.
Torque is preset.
3 other versions available: free swinging, with spring or with friction mechanism.

Part number	Material	Finish	A	B	C	D	Torque	Weight (g)
72-1-4197	6060 T5 alu	black anodised	67	55	4.5	13	1.8 N.m	106
72-1-4198	6060 T5 alu	black anodised	67	55	4.5	13	2.5 N.m	107
72-1-4225	6060 T5 alu	black anodised	67	55	4.5	13	3.2 N.m	107
72-1-4233	6060 T5 alu	black anodised	67	55	4.5	13	5 N.m	107

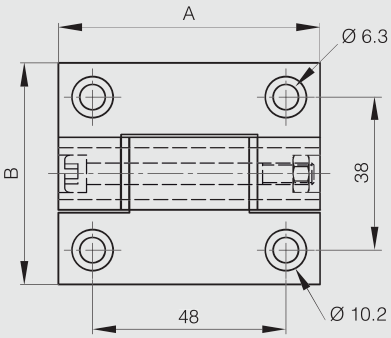

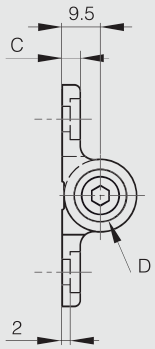

Round top weld-on aluminium hinges - stainless steel pin - stainless steel washer

180° ALU

Part number	Material	Finish	A	B	C	D	Weight (g)
14-7-3815	aluminium	raw	60	12	10	6	20
14-7-3816	aluminium	raw	80	16	13	8	40
14-7-3817	aluminium	raw	100	20	16	10	75
14-7-3818	aluminium	raw	120	20	16	11	93

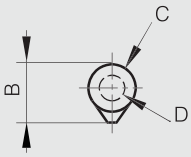

Small FinAlu® hinges

NEW

270° ALU RoHS

Small hinges in aluminium profile with a small pin diameter.
This nice design can be used in many applications: (medical, electronic enclosures, food equipment, transportation...).
These drilled hinges have same features as FinAlu® continuous hinges.
They have the similar dimensions to hinges used in the aircraft industry.

	Part number	Material	Finish	A	B	C	D	E	F	G	S	Pin material	Weight (g)
NEW	72-1-4298	6082 T5 alu	clear anodised	38	31.75	1.3	2.2	2.29	20	22	4.3	stainless steel	7
NS	72-1-4350	6082 T5 alu	blue anodised	38	31.75	1.3	2.2	2.29	20	22	4.3	stainless steel	5
NS	72-1-4351	6082 T5 alu	red anodised	38	31.75	1.3	2.2	2.29	20	22	4.3	stainless steel	5
NS	72-1-4352	6082 T5 alu	bronze anodised	38	31.75	1.3	2.2	2.29	20	22	4.3	stainless steel	5
NS	72-1-4353	6082 T5 alu	gold anodised	38	31.75	1.3	2.2	2.29	20	22	4.3	stainless steel	5
NEW	72-1-4420	6082 T5 alu	clear anodised	40	38.1	1.3	2.2	2.29	24	24	4.3	stainless steel	10
NEW	72-1-4299	6082 T5 alu	clear anodised	50	44.45	1.3	2.2	2.29	30	34	4.3	stainless steel	10
NS	72-1-4354	6082 T5 alu	blue anodised	50	44.45	1.3	2.2	2.29	30	34	4.3	stainless steel	9
NS	72-1-4355	6082 T5 alu	red anodised	50	44.45	1.3	2.2	2.29	30	34	4.3	stainless steel	9
NS	72-1-4356	6082 T5 alu	bronze anodised	50	44.45	1.3	2.2	2.29	30	34	4.3	stainless steel	9
NS	72-1-4357	6082 T5 alu	gold anodised	50	44.45	1.3	2.2	2.29	30	34	4.3	stainless steel	9
NEW	72-1-4300	6082 T5 alu	clear anodised	63.5	63.5	1.3	2.2	2.29	40	40	6	stainless steel	18
NS	72-1-4358	6082 T5 alu	blue anodised	63.5	63.5	1.3	2.2	2.29	40	40	6	stainless steel	15
NS	72-1-4359	6082 T5 alu	red anodised	63.5	63.5	1.3	2.2	2.29	40	40	6	stainless steel	15
NS	72-1-4360	6082 T5 alu	bronze anodised	63.5	63.5	1.3	2.2	2.29	40	40	6	stainless steel	15
NS	72-1-4361	6082 T5 alu	gold anodised	63.5	63.5	1.3	2.2	2.29	40	40	6	stainless steel	15

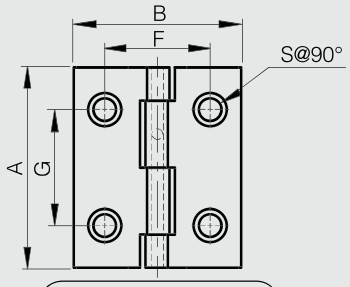

72-1-4298 & 72-1-4420

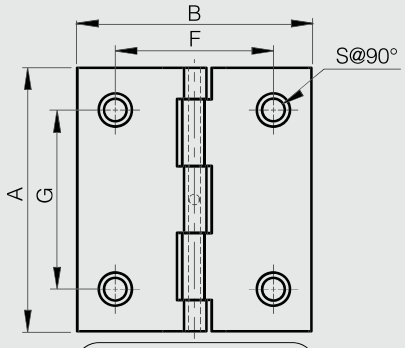

72-1-4299 & 72-1-4300

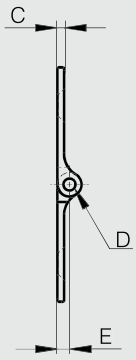

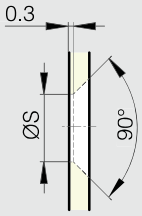

Aluminium profile hinges 30 x 35 mm

NEW

270° ALU RoHS

Free-swinging hinge.
It has the same footprint and design as our friction, detent and spring hinges.
All are fully interchangeable.
Plastic pin.

	Part number	Material	Finish	A	B	C	D	Weight (g)
NEW	72-1-4301	6060 T5 alu	clear anodised	30	35	3.3	8	10
NEW	72-1-4302	6060 T5 alu	black anodised	30	35	3.3	8	10

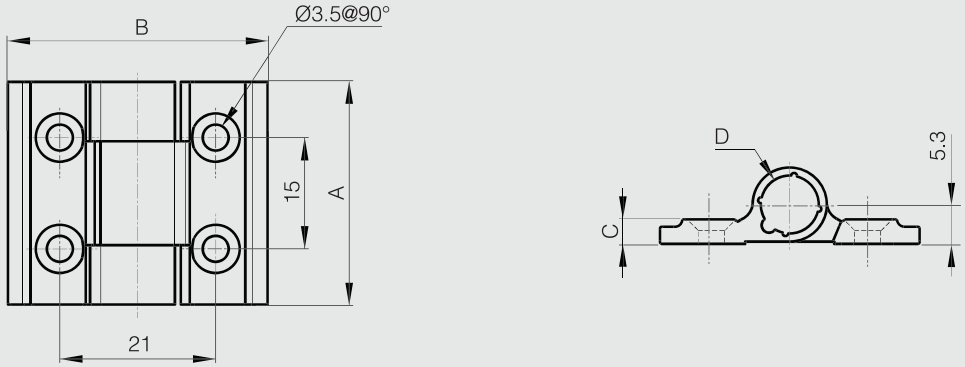

Aluminium profile hinges 60 x 35 mm

NEW

270° ALU RoHS

	Part number	Material	Finish	A	B	C	D	Weight (g)
NEW	72-1-4396	6060 T5 alu	clear anodised	60	35	3.3	8	18
NEW	72-1-4397	6060 T5 alu	black anodised	60	35	3.3	8	18

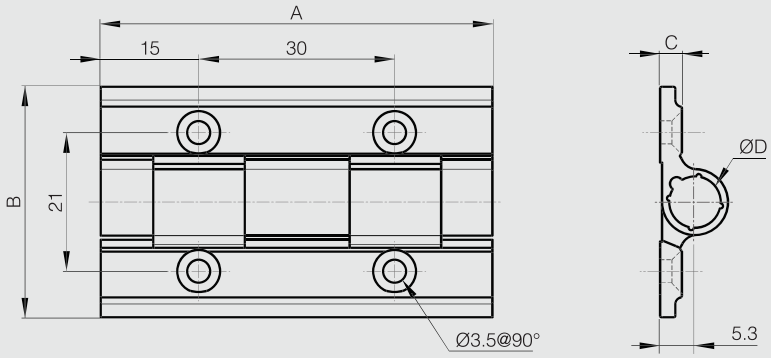

Aluminium profile hinges 90 x 35 mm

NEW

270° ALU RoHS

	Part number	Material	Finish	A	B	C	D	Weight (g)
NEW	72-1-4398	6060 T5 alu	clear anodised	90	35	3.3	8	29
NEW	72-1-4399	6060 T5 alu	black anodised	90	35	3.3	8	29

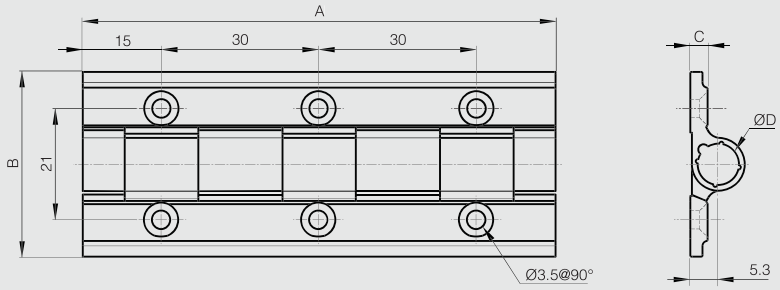

Aluminium profile hinges 120 x 35 mm

NEW

270° ALU RoHS

	Part number	Material	Finish	A	B	C	D	Weight (g)
NEW	72-1-4400	6060 T5 alu	clear anodised	120	35	3.3	8	38
NEW	72-1-4401	6060 T5 alu	black anodised	120	35	3.3	8	38

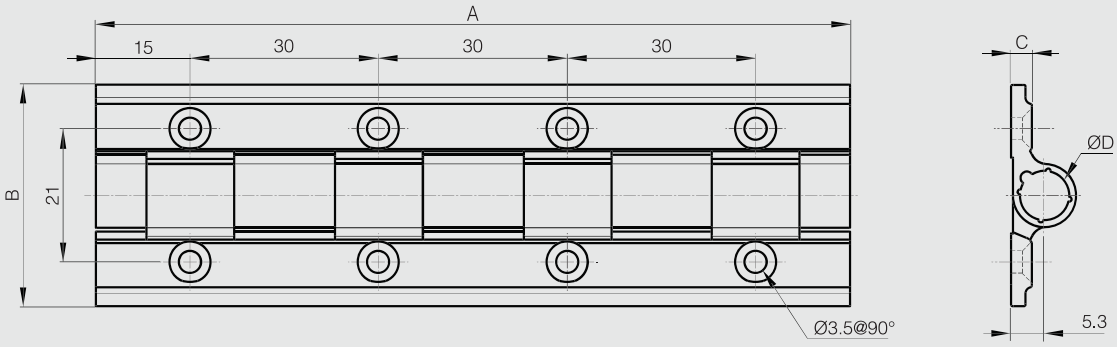

Aluminium profile hinges - diameter 13

180° ALU RoHS

This hinge has the same footprint and design as our friction, detent and spring hinges.
All are fully interchangeable.
Plastic pin with or without end caps.

Part number	Material	Finish	A	B	C	D	Note	Weight (g)
72-1-4212	6060 T5 alu	clear anodised	65	55	4.5	13	without cap	130
72-1-4213	6060 T5 alu	black anodised	65	55	4.5	13	without cap	130
72-1-4214	6060 T5 alu	clear anodised	65	55	4.5	13	with cap	130
72-1-4215	6060 T5 alu	black anodised	65	55	4.5	13	with cap	130

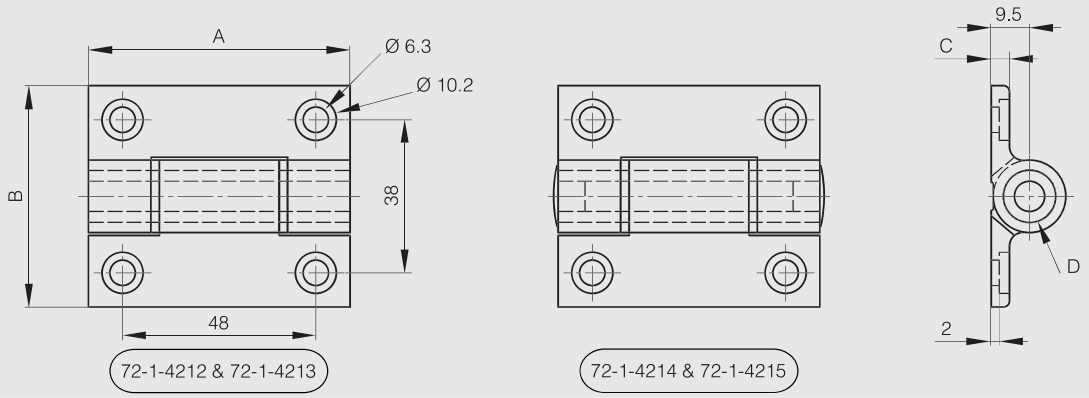

Heavy duty aluminium profile hinges

270° ALU RoHS

Free swinging hinge.
It has the same footprint and design as the spring hinge for heavy duty applications (part numbers: 72-1-4231, 72-1-4232, 72-1-4258 and 72-1-4259).
All are fully interchangeable.

Part number	Material	Finish	A	B	C	D	Weight (g)
72-1-4241	6082 T5 alu	clear anodised	100	82.5	5.5	24	149
72-1-4242	6082 T5 alu	black anodised	100	82.5	5.5	24	150

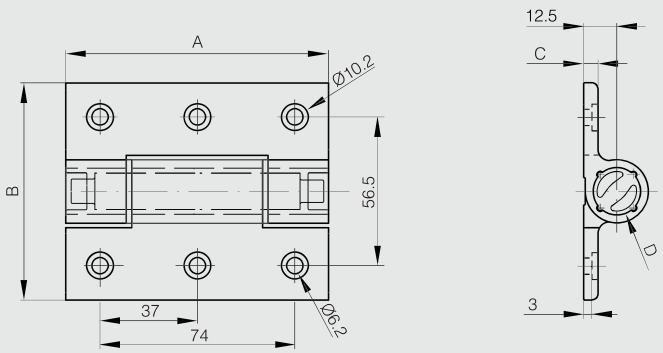

Aluminium hinges - 50 mm width

Hinge with 304 stainless steel riveted pin.

270° ALU RoHS

Part number	Material	Finish	A	B	C	D	Weight (g)
72-1-3635	6060 T5 alu	raw	32	50	3	5.2	20
72-1-3636	6060 T5 alu	raw	50	50	3	5.2	30

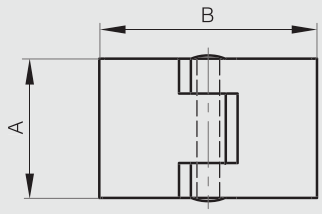

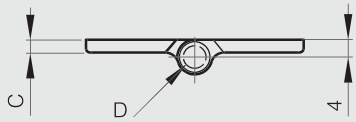

Aluminium hinges with reversed leaves - 50 mm width

Hinge with 304 stainless steel riveted pin.

270° ALU RoHS

Part number	Material	Finish	A	B	C	D	Weight (g)
72-1-3637	6060 T5 alu	raw	32	50	3	5.2	20
72-1-3638	6060 T5 alu	raw	50	50	3	5.2	30

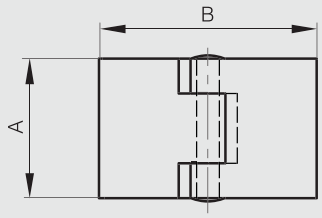

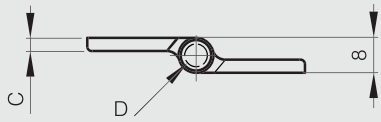

Clean room lift-off hinges 65 x 60 mm

270° ALU RoHS

No metal-to-metal contact. Polyacetal bushings minimize particles.
Door size: max. W600 x L800.
Door weight: max. 8 kg/pair.
303 stainless steel pin.

Part number	Material	Finish	A	B	C	D	G	S	Note	Weight (g)
14-7-3877	aluminium	anodised	65	60	3.5	5	40	5.5	type 1	49
14-7-3878	aluminium	anodised	65	60	3.5	5	40	5.5	type 2	49

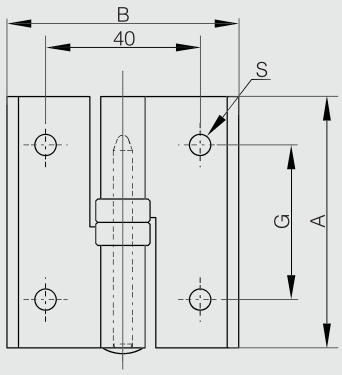

14-7-3877

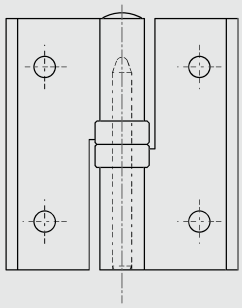

14-7-3878

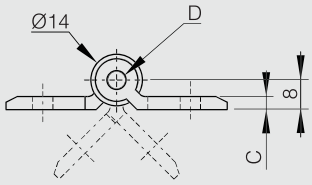

Aluminium lift-off hinges 80 x 80 mm

270° ALU RoHS

Zinc plated steel pin.
Nylon bushing.

Part number	Material	Finish	A	B	C	D	S	Note	Weight (g)
14-7-3624	aluminium	anodised silver	80	80	3.5	8	5.5	type 1	85
14-7-3625	aluminium	anodised silver	80	80	3.5	8	5.5	type 2	85

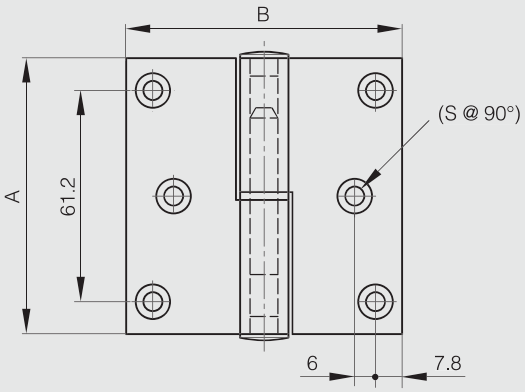

14-7-3624

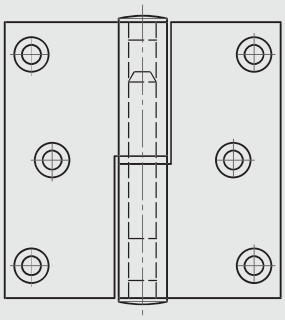

14-7-3625

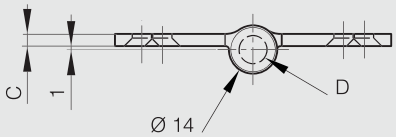

Aluminium lift-off hinges 100 x 100 mm

270° ALU RoHS

Zinc plated steel pin.
Nylon bushing.

Part number	Material	Finish	A	B	C	D	S	Note	Weight (g)
14-7-3628	aluminium	anodised silver	100	100	4	9	6	type 1	106
14-7-3629	aluminium	anodised silver	100	100	4	9	6	type 2	106

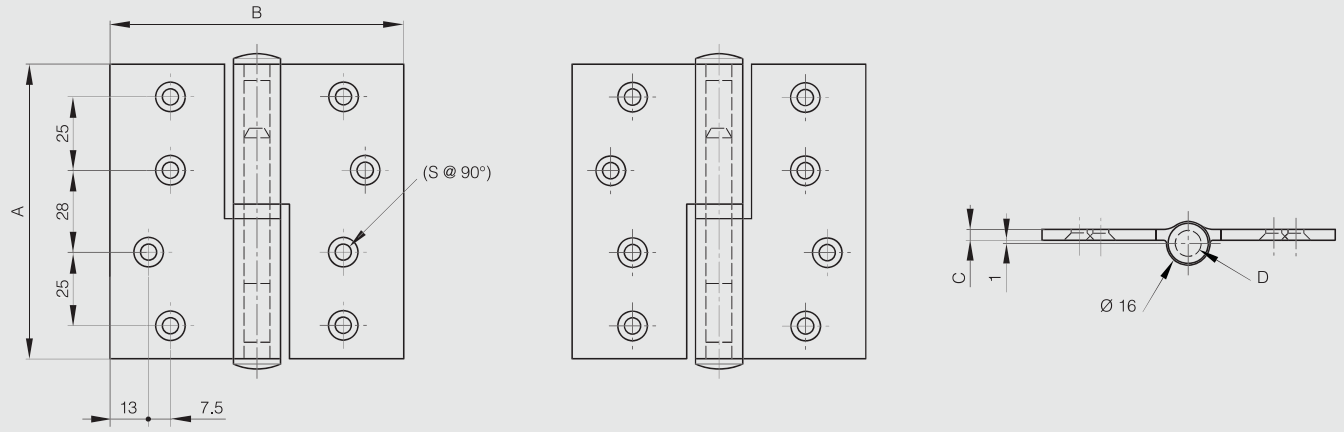

Lift-off hinges in aluminium profile with a stainless steel pin

270° ALU RoHS

Stainless steel pin.
Supplied with polymer caps.

Part number	Material	Finish	A	B	C	D	E	Note	Weight (g)
12-1-4283	6060 T5 alu	clear anodised	102	45.9	2.5	6.1	50	type 1	50
12-1-4286	6060 T5 alu	clear anodised	102	45.9	2.5	6.1	50	type 2	50
12-1-4284	6060 T5 alu	black anodised	102	45.9	2.5	6.1	50	type 1	50
12-1-4287	6060 T5 alu	black anodised	102	45.9	2.5	6.1	50	type 2	50

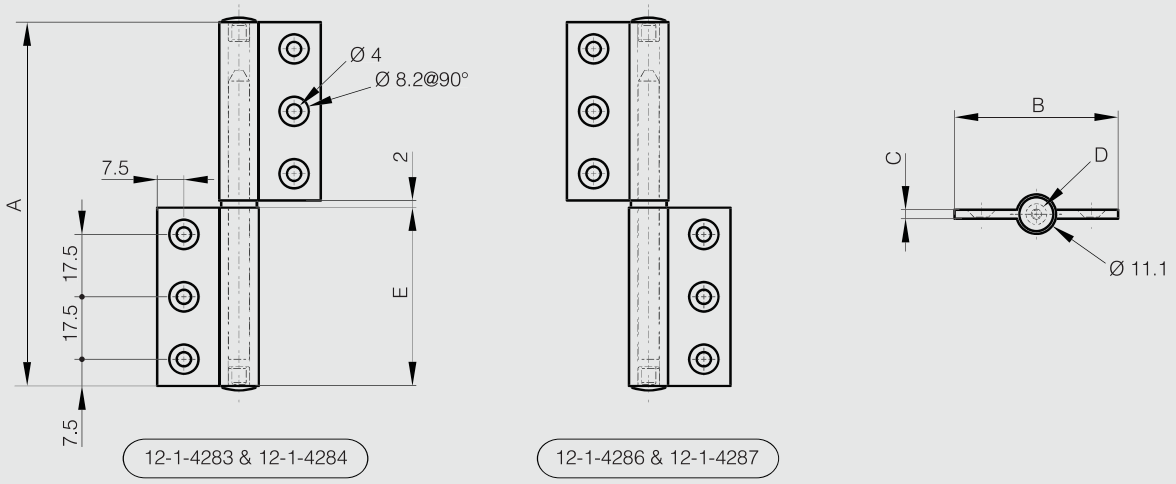

Springloaded bolt with locking system in aluminium - small dimension

NEW

ALU RoHS

Bolt can be held back in unlocked position.
Body: clear anodised aluminium.
Shaft and handle: raw aluminium.
Cap: PE, black.
Spring: stainless steel.

	Part number	Material	Finish	A	B	C	Note	Weight (g)
NEW	**16-1-4316**	alu 6060 T5	clear anodised	30	22.5	18.2	type 2	9
NEW	**16-1-4317**	alu 6060 T5	clear anodised	30	22.5	18.2	type 1	9

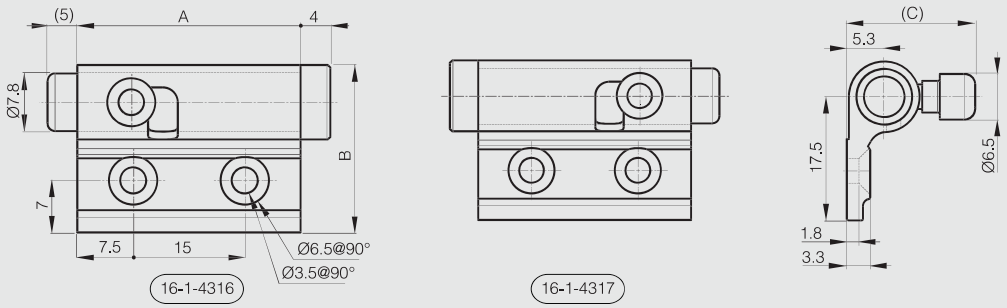

Springloaded bolt with locking system in aluminium

ALU RoHS

Stop when open.
Body: clear anodised aluminium.
Shaft and handle: raw aluminium.
Cap: PE, black.
Spring: stainless steel.
No strike included (strike part number 16-1-4323).

Part number	Material	Finish	A	B	C	Note	Weight (g)
16-1-4312	6060 T5 alu	clear anodised	60	36.5	34	type 2	58
16-1-4313	6060 T5 alu	clear anodised	60	36.5	34	type 1	58

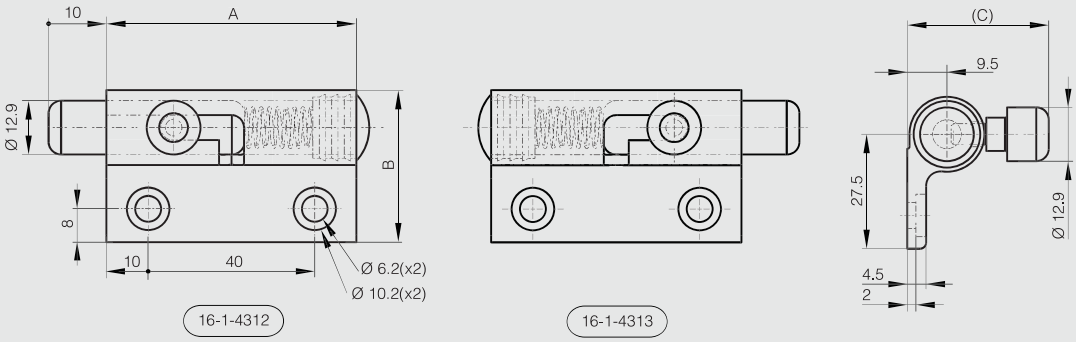

Strike for spring-loaded bolt and barrel bolt in aluminium

Strike for:
- Spring loaded bolt with locking system part numbers: 16-1-4312 and 16-1-4313
- Barrel bolt part number: 16-1-4311

	Part number	Material	Finish	A	B	C	Weight (g)
NEW	**16-1-4323**	5754 alu	anodised	25	37	19	11

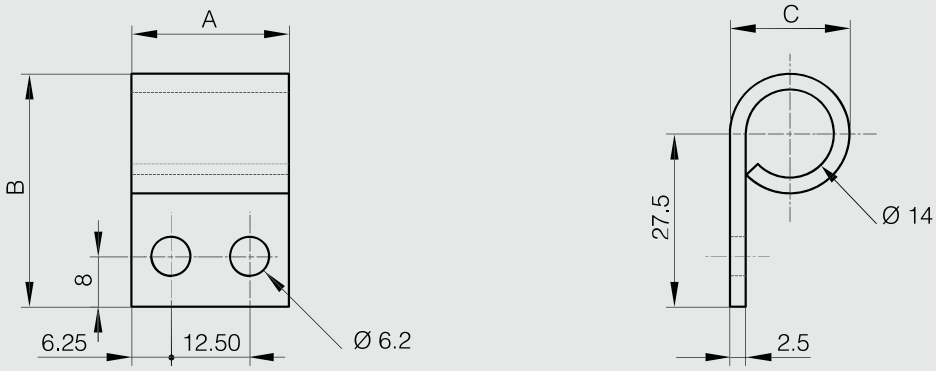

Barrel bolt in aluminium - small dimension

NEW

ALU RoHS

Body: clear anodised aluminium.
Shaft and handle: raw aluminium.
Shaft lenght when closed: 10 mm.

	Part number	Material	Finish	A	B	C	Weight (g)
NEW	16-1-4315	alu 6060 T5	clear anodised	30	22.5	18.2	11

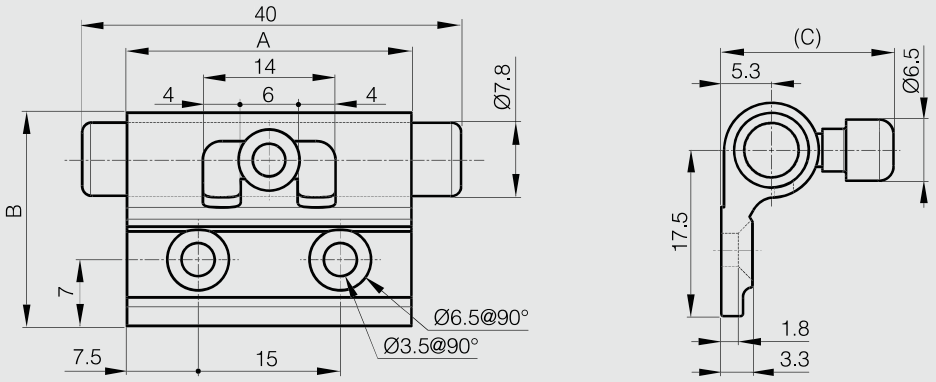

Barrel bolt in aluminium

ALU RoHS

Body: clear anodised aluminium.
Shaft and handle: raw aluminium.
Shaft lenght when closed: 15 mm.
No strike included (strike part number 16-1-4323).

Part number	Material	Finish	A	B	C	Weight (g)
16-1-4311	6060 T5 alu	clear anodised	60	36.5	34	65

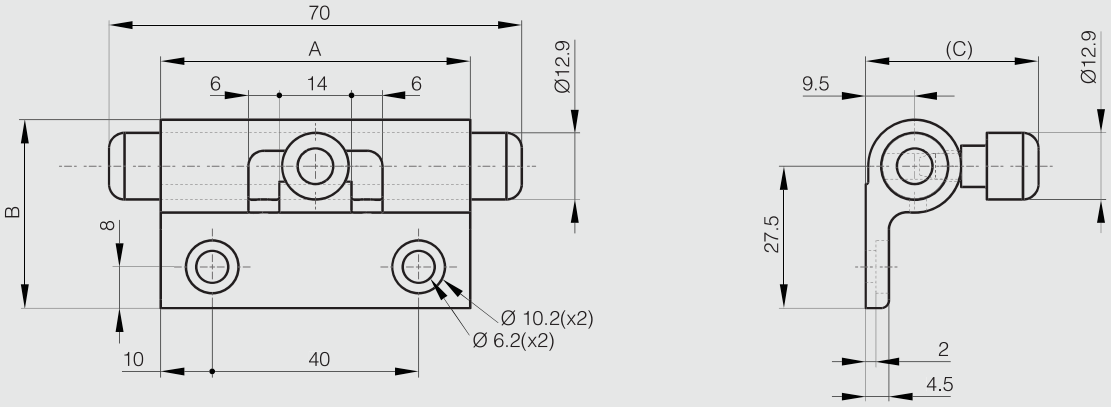

Rear mounted grab handles 92 and 108 mm

ALU RoHS

Part number	Material	Finish	A	B	D	L	M	Weight (g)
19-1-3425	aluminium	polished	92	32	10	10	5	26
19-1-3672	aluminium	polished	108	39	10	10	4	30

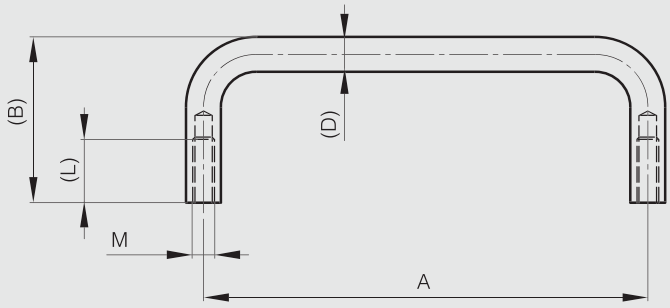

Rear mounted grab handles 52 to 120 mm

ALU RoHS

Part number	Material	Finish	A	B	D	L	M	Weight (g)
19-7-3683	aluminium	clear anodised	52	34	8	10	4	14
19-7-3684	aluminium	clear anodised	80	34	8	12	4	17
19-7-3685	aluminium	clear anodised	100	34	8	12	4	20
19-7-3686	aluminium	clear anodised	120	34	8	10	4	23
19-7-3409	aluminium	polished	100	30	7	8	4	14

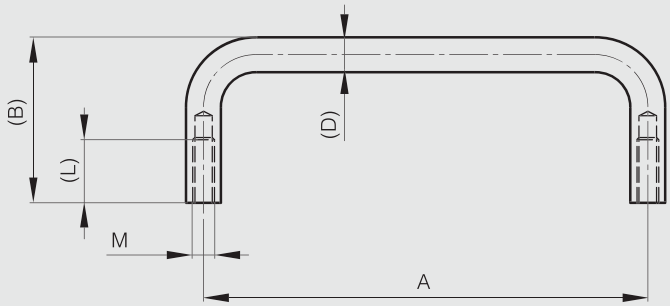

Black aluminium rear mounted grab handles 75 to 150 mm

ALU RoHS

Part number	Material	Finish	A	B	C	Weight (g)
19-1-9001	aluminium	black painting	75	38	16	34
19-1-9002	aluminium	black painting	100	38	16	45
19-1-9003	aluminium	black painting	150	38	16	68

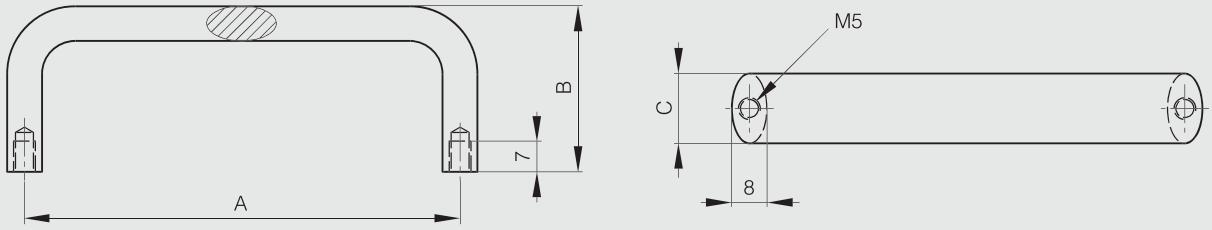

Black aluminium rear mounted grab handles 88 to 120 mm

ALU RoHS

Part number	Material	Finish	A	B	F	Weight (g)
19-7-3644	aluminium	matt black	88	40	102	50
19-7-3645	aluminium	matt black	120	40	134	60

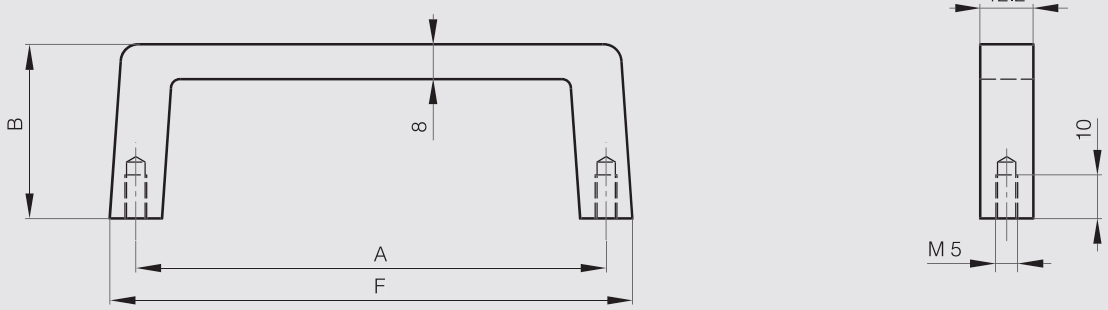

Flush handles 105 x 63.5 mm

ALU RoHS

This handle has 2 detents at 0° and 90°.
Maximum load: 100 kg/pair.
Handle is chrome plated.
Delivered unassembled.
Assembled version: upon request.

Part number	Material	Finish	A	B	C	Weight (g)
19-7-3605	aluminium	raw	105	63.5	17.5	123

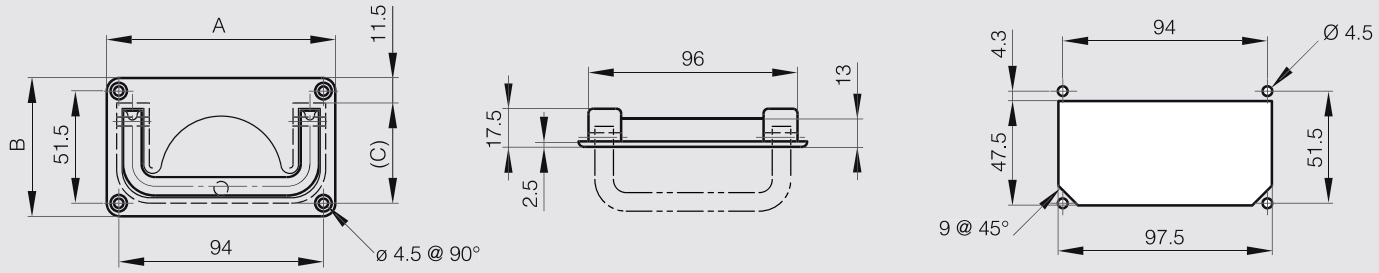

Flush handle 120 x 91 mm

ALU RoHS

This handle has 2 detents at 0° and 90°.
Maximum load: 100 kg/pair.
Delivered unassembled.
Assembled version: upon request.

Part number	Material	Finish	A	B	C	Weight (g)
19-7-3338	aluminium	raw	120	91	71.5	145

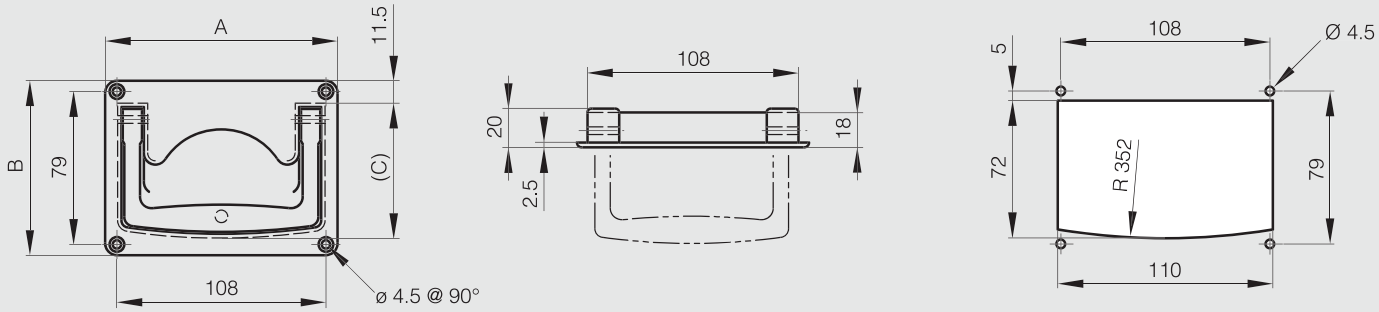

Notes

Part number	Pages
12-1-3303	216
12-1-3304	216
12-1-3305	216
12-1-3306	216
12-1-3307	217
12-1-3308	217
12-1-3309	217
12-1-3310	217
12-1-3311	217
12-1-3312	217
12-1-3313	217
12-1-3314	217
12-1-3524	53
12-1-3528	53
	400
12-1-3537	53
12-1-3538	53
	399
12-1-3634	215
12-1-3635	215
12-1-3682	203
	470
12-1-3683	203
	470
12-1-3769	216
	473
12-1-3770	216
	473
12-1-3771	216
	473
12-1-3772	216
	473
12-1-3849	216
12-1-3854	63
	235
12-1-3855	63
	235
12-1-3856	63
	235
12-1-3857	63
	235
12-1-3858	63
	235
	404
	478
12-1-3859	63
	235
	404
	478
12-1-3860	63
	235
12-1-3861	63
	235
12-1-3862	63
	235
	405
	478
12-1-3863	63
	235
	405
	478
12-1-3866	134
12-1-3867	134
12-1-3868	134
12-1-3869	134
	443
12-1-3870	134
	443
12-1-3871	134
	443
12-1-3872	135
12-1-3873	135
12-1-3874	135
12-1-3875	135
	443
12-1-3876	135
	443
12-1-3877	135
	443
12-1-3878	135
12-1-3879	135
12-1-3880	135
12-1-3881	135
	443
12-1-3882	135
	443
12-1-3883	135
	443
12-1-3941	134
12-1-3942	134
	443
12-1-3943	134
12-1-3944	134
	443
12-1-3950	63
	235
12-1-3951	63
	235
12-1-4258	218
	474
12-1-4283	215
	565
12-1-4284	215
	565
12-1-4285	218
	474
12-1-4286	215
	565
12-1-4287	215
	565
12-7-3810	152
	453
12-7-3811	152
	453
12-7-4241	107
12-7-4280	107
14-1-3328	131
14-1-3329	131
14-1-3330	131
14-1-3331	131
14-1-3332	131
14-1-3333	131
14-1-3334	131
14-1-3335	131
14-1-3336	131
14-1-3337	131
14-1-3872	189
	461
14-1-3873	189
	461
14-1-3886	98
	425
14-1-3892	98
	425
14-7-3390	187
14-7-3391	187
14-7-3392	187
14-7-3393	187
14-7-3394	188
14-7-3395	188
14-7-3396	188
14-7-3397	188
14-7-3398	188
14-7-3399	188
14-7-3400	188
14-7-3401	188
14-7-3569	150
14-7-3570	150
14-7-3571	150
14-7-3572	150
14-7-3573	148
14-7-3574	148
14-7-3575	148
14-7-3576	148
14-7-3583	150
14-7-3584	150
14-7-3585	148
14-7-3586	148
14-7-3587	148
14-7-3588	148
14-7-3589	148
14-7-3590	148
14-7-3591	148
14-7-3592	148
14-7-3593	148
14-7-3594	148
14-7-3595	148
14-7-3596	148
14-7-3597	150
14-7-3598	150
14-7-3599	150
14-7-3600	150
14-7-3601	150
14-7-3603	150
14-7-3604	150
14-7-3610	148
14-7-3611	148
14-7-3612	148
14-7-3624	184
	563
14-7-3625	184
	563
14-7-3628	185
	564
14-7-3629	185
	564
14-7-3634	151
14-7-3635	151
14-7-3636	151
14-7-3637	151
14-7-3638	151
14-7-3641	151
14-7-3642	151
14-7-3675	190
	462
14-7-3679	190
	462
14-7-3693	150
	453
14-7-3696	150
	453
14-7-3697	150
	453
14-7-3698	150
	453
14-7-3722	162
14-7-3723	162
14-7-3727	189
	461
14-7-3728	189
	461
14-7-3745	97
14-7-3786	149
14-7-3787	149
14-7-3788	149
14-7-3789	149
14-7-3790	149
14-7-3791	149
14-7-3793	149
14-7-3794	148
14-7-3796	149
14-7-3813	211
14-7-3814	211
14-7-3815	149
	557
14-7-3816	149
	557
14-7-3817	149
	557
14-7-3818	149
	557
14-7-3877	184
	563
14-7-3878	184
	563
14-7-3902	146
	452
14-7-3903	146
	452
14-7-3904	112
	432
14-7-3905	112
	432
14-7-3906	112
	432
14-7-3907	112
	432
15-7-3562	117
	436
15-7-3563	117
	436
15-7-3564	117
	436
15-7-3565	117
	436
15-7-3566	122
15-7-3567	122
15-7-3568	123
15-7-3569	123
15-7-3570	124
15-7-3571	124
15-7-3572	125
15-7-3573	125
15-7-3574	117
	436
15-7-3575	117
	436
15-7-3576	117
	436
15-7-3577	117
	436
15-7-3578	116
	435
15-7-3579	116
	435
15-7-3580	116
	435
15-7-3581	116
	435
15-7-3582	116
	435
15-7-3583	116
	435
16-1-3266	246
16-1-3271	259
16-1-3272	259
16-1-3430	230
16-1-3431	230
16-1-3433	230
16-1-3434	230
16-1-3436	230
16-1-3437	230
16-1-3594	258
16-1-3595	258
16-1-3596	258
16-1-3625	230
16-1-3626	230
16-1-3628	230
16-1-3629	230
16-1-3631	230
16-1-3632	230
16-1-3633	231
16-1-3634	231
16-1-3636	231
16-1-3637	231
16-1-3639	231
16-1-3640	231
16-1-3647	234
16-1-3972	248
	480
16-1-4031	249
	481
16-1-4032	249
	481
16-1-4034	237
16-1-4038	295
	313
16-1-4050	285
16-1-4083	251
16-1-4085	250
16-1-4086	250
	480
16-1-4105	233
16-1-4106	233
16-1-4107	233
	477
16-1-4108	233
	477
16-1-4111	320
16-1-4112	240
16-1-4113	240
16-1-4130	322
16-1-4217	233
16-1-4226	246
16-1-4227	246
16-1-4229	246
16-1-4231	318
	510
16-1-4236	319
	510
16-1-4257	285
	488
16-1-4261	323
	513
16-1-4265	229
	476
16-1-4282	229
	476
16-1-4311	252
	568
16-1-4312	236
	566
16-1-4313	236
	566
16-1-4315	252
	568
16-1-4316	236
	566
16-1-4317	236
	566
16-1-4323	237
	567
16-1-4330	251
	482
16-1-8001	245
16-1-8002	244
16-1-8003	245
16-1-8004	244
16-1-8005	245
16-1-8006	244
16-1-8008	245
16-1-8009	244
16-1-9001	286
16-1-9002	286
16-1-9003	286
16-1-9004	286
16-1-9006	287
16-1-9007	238
16-1-9008	238
	479
16-1-9010	241
16-1-9011	287
16-1-9012	283
16-1-9013	283
	487
16-1-9014	283
16-1-9015	283
	487
16-1-9016	284
16-1-9017	284
	488
16-1-9018	241
16-1-9019	239
16-1-9021	314
	506
16-1-9022	314
16-1-9023	241
16-1-9025	238
	479
16-1-9026	234
16-7-3288	248
16-7-3289	248
16-7-3330	257
16-7-3331	257
16-7-3332	257
16-7-3333	257
16-7-3349	281
16-7-3351	271
	278
16-7-3378	280
16-7-3387	279
16-7-3390	271
16-7-3391	274
16-7-3394	298
16-7-3395	301
16-7-3397	301
16-7-3400	312
16-7-3402	312
16-7-3406	295
	312
16-7-3410	289
16-7-3411	292
16-7-3414	289
	298
16-7-3415	292
	301
16-7-3423	255
16-7-3469	255
16-7-3470	255
16-7-3471	255
16-7-3483	273
16-7-3484	279
16-7-3487	273
16-7-3488	273
16-7-3490	280
16-7-3492	270
16-7-3494	272
16-7-3508	294
16-7-3525	289
	489
16-7-3526	292
	492
16-7-3527	289
	489
16-7-3529	289
	490
16-7-3530	292
	492
16-7-3531	289
	490
16-7-3551	285
	294
	303
16-7-3601	285
	294
	489
	493
16-7-3610	272
16-7-3611	274
16-7-3651	280
16-7-3664	303
16-7-3672	274
16-7-3673	275
	278
16-7-3674	277
16-7-3675	278
16-7-3680	253
16-7-3681	253

Index

Part number	Pages
16-7-3682	282
16-7-3683	282
16-7-3723	300
16-7-3724	300
	496
16-7-3729	300
16-7-3730	300
	496
16-7-3735	310
16-7-3736	310
	504
16-7-3739	304
	310
	498
	504
16-7-3741	304
	310
16-7-3742	304
	310
	498
	504
16-7-3745	311
	505
16-7-3747	311
16-7-3748	311
	505
16-7-3751	305
	311
	319
	499
	505
	511
16-7-3753	305
	311
16-7-3754	305
	311
	319
	499
	505
	511
16-7-3759	304
16-7-3760	304
	498
16-7-3765	305
16-7-3766	305
	499
16-7-3767	321
16-7-3768	323
16-7-3828	295
	494
16-7-3829	294
	493
16-7-3835	231
	477
16-7-3838	260
16-7-3839	314
16-7-3840	318
16-7-3841	318
	509
16-7-3842	317
16-7-3844	317
	509
16-7-3845	290
16-7-3846	290
	490
16-7-3860	265
16-7-3863	253
	483
16-7-3870	295
	313
16-7-3873	291
16-7-3874	291
	296
	491
	495
16-7-3875	291
16-7-3876	291
	491
16-7-3878	299
16-7-3879	299
16-7-3880	293
16-7-3881	293
	302
16-7-3883	302
16-7-3884	302
	497
16-7-3885	302
	497
16-7-3891	296
	495
16-7-3900	320
	511
16-7-3902	322
	512
16-7-3906	308
	502
16-7-3907	308
	502
16-7-3911	309
	503
16-7-3915	309
16-7-3916	306
	309
	500
	503
16-7-3917	306
	500
16-7-3918	309
	503
16-7-3920	309
	503
16-7-3933	315
	507
16-7-3934	315
16-7-3939	315
16-7-3940	315
	507
16-7-3947	321
16-7-3948	321
	512
16-7-4012	250
16-7-4013	277
16-7-4015	277
16-7-4017	316
16-7-4018	307
16-7-4019	316
16-7-4020	307
16-7-4021	307
16-7-4022	316
16-7-4023	307
16-7-4024	316
	508
16-7-4025	307
	501
16-7-4026	316
	508
16-7-4027	307
	501
16-7-4028	307
	501
16-7-4029	316
	508
16-7-4030	307
	501
16-7-4033	268
16-7-4061	233
16-7-4062	233
16-7-4063	247
16-7-4071	247
16-7-4081	267
16-7-4082	267
16-7-4151	242
16-7-4152	242
16-7-4153	242
16-7-4154	242
16-7-4204	266
16-7-4205	266
16-7-4206	267
16-7-4207	268
16-7-4209	277
16-7-4210	260
16-7-4211	256
16-7-4212	256
16-7-4213	256
16-7-4214	265
16-7-4220	231
16-7-4254	269
16-7-4255	269
16-7-4256	269
16-7-4273	232
16-7-4275	232
16-7-4276	288
16-7-4277	297
16-7-4278	272
16-7-4291	243
16-7-4293	270
16-7-4294	276
	486
16-7-4295	276
	486
16-7-4296	275
16-7-4297	276
	485
16-7-4298	264
16-7-4299	263
16-7-4300	262
16-7-4301	263
16-7-4302	261
16-7-4303	262
16-7-4304	261
16-7-4305	256
	484
16-7-4306	256
	484
16-7-4307	256
	484
16-7-4308	268
16-7-4309	268
	485
16-7-4310	243
16-7-4331	264
19-1-3390	334
19-1-3424	331
	515
19-1-3425	332
	569
19-1-3569	333
19-1-3570	333
19-1-3571	333
19-1-3672	332
	569
19-1-3687	353
19-1-3797	328
	514
19-1-3798	331
19-1-3807	328
19-1-3815	350
19-1-3830	354
19-1-3833	334
	516
19-1-3834	334
	516
19-1-9000	337
19-1-9001	335
	570
19-1-9002	335
	570
19-1-9003	335
	570
19-1-9004	342
19-1-9005	342
19-1-9006	341
19-7-3338	347
	571
19-7-3339	338
19-7-3341	339
19-7-3343	329
19-7-3385	336
19-7-3387	336
19-7-3409	332
	569
19-7-3410	332
19-7-3411	332
19-7-3426	336
19-7-3515	340
19-7-3535	340
19-7-3605	347
	571
19-7-3606	348
19-7-3633	338
19-7-3637	338
19-7-3638	339
19-7-3639	328
19-7-3641	343
19-7-3642	349
19-7-3643	348
19-7-3644	335
	570
19-7-3645	335
	570
19-7-3649	340
19-7-3667	350
19-7-3683	332
	569
19-7-3684	332
	569
19-7-3685	332
	569
19-7-3686	332
	569
19-7-3688	355
19-7-3689	355
19-7-3690	340
	517
19-7-3694	329
	514
19-7-3695	329
	514
19-7-3696	334
	516
19-7-3697	334
	516
19-7-3698	334
	516
19-7-3699	333
	515
19-7-3700	333
	515
19-7-3701	333
	515
19-7-3706	341
19-7-3710	343
19-7-3711	343
	517
19-7-3721	339
19-7-3725	345
	518
19-7-3729	345
19-7-3730	345
19-7-3733	344
19-7-3740	344
19-7-3741	344
	518
19-7-3745	344
19-7-3746	344
	518
19-7-3749	346
19-7-3751	346
19-7-3756	346
19-7-3813	349
	519
19-7-3814	349
	519
19-7-3826	354
19-7-3831	351
	519
19-7-3832	351
	520
19-7-3838	353
19-7-3845	352
	520
21-7-3548	376
	533
21-7-3549	376
	533
21-7-3550	376
	533
21-7-3551	376
	533
21-7-3552	376
	533
21-7-3553	376
	533
21-7-3554	376
	533
21-7-3555	375
	532
21-7-3556	375
	532
21-7-3557	375
	532
21-7-3558	375
	532
21-7-3559	375
	532
21-7-3560	375
	532
21-7-3561	375
	532
21-7-3562	373
	530
21-7-3563	373
	530
21-7-3564	373
	530
21-7-3565	373
	530
21-7-3566	373
	530
21-7-3567	373
	530
21-7-3568	373
	530
21-7-3569	374
	531
21-7-3570	374
	531
21-7-3571	374
	531
21-7-3572	374
	531
21-7-3573	374
	531
21-7-3574	374
	531
21-7-3575	374
	531
21-7-3576	373
	530
21-7-3577	373
	530
21-7-3578	375
	532
21-7-3579	375
	532
21-7-3584	377
	534
21-7-3585	377
	534
21-7-3586	377
	534
21-7-3587	377
	534
21-7-3588	377
	534
21-7-3589	377
	534
21-7-3590	377
	534
21-7-3591	377
	534
21-7-3592	377
	534
22-7-3547	370
	527
22-7-3548	370
	527
22-7-3556	100
22-7-3557	371
	528
22-7-3558	372
	529
22-7-3559	372
	529
22-7-3560	371
	528
22-7-3561	371
	528
24-1-0247	368
	525
24-1-0248	368
	525
24-1-3311	367
24-1-3312	367
24-1-3323	367
24-1-3324	367
24-1-3558	362
	522
24-1-3559	362
	522
24-1-3560	362
	522
24-1-3578	366
24-1-3588	366
24-1-9000	366
	525
24-1-9001	366
	525
24-7-3525	368
24-7-3526	368
24-7-3527	368
24-7-3528	368
24-7-3529	368
24-7-3530	368
24-7-3531	368
24-7-3532	368
24-7-3542	360
24-7-3543	361
24-7-3546	364
	523
24-7-3547	364
	523
24-7-3548	364
	523
24-7-3552	361
	521
24-7-3553	361
	521
24-7-3571	360
	521
24-7-3577	360
	521
24-7-3579	365
	524
24-7-3580	363
	523
24-7-3587	369
	526

Part number	Pages
24-7-3595	369, 526
27-1-3816	49
27-1-3817	49
27-1-3818	49
27-1-3820	136
27-1-3821	136
27-1-3822	136
27-1-3823	136, 444
27-1-3824	136, 444
27-1-3825	136, 444
27-1-3826	137
27-1-3827	137
27-1-3828	137
27-1-3829	137, 444
27-1-3830	137, 444
27-1-3831	137, 444
27-1-3832	137
27-1-3833	137
27-1-3834	137
27-1-3835	137, 444
27-1-3836	137, 444
27-1-3837	137, 444
27-1-3938	136
39-1-3300	47, 396
39-1-3630	47, 396
39-1-3631	47
39-1-3632	47
39-1-3633	47, 396
39-1-3634	48
39-1-3635	48, 397
39-1-3885	73, 412
39-1-3886	73, 412
39-1-3887	73, 412
39-1-3888	73, 412
39-1-3889	74, 413
39-1-3890	74, 413
39-1-3891	74, 413
39-1-3892	74, 413
40-1-3321	35
40-1-3322	36
40-1-3323	37
40-1-3324	38
40-1-3327	35
40-1-3328	35
40-1-3329	36
40-1-3330	37
40-1-3332	38
40-1-3335	41
40-1-3541	41
40-1-3542	43
40-1-3543	43
40-1-3679	37
40-1-3680	37
40-1-3681	39
40-1-3682	39
40-1-3683	39
40-1-3703	39
40-1-3704	40
40-1-3758	40
40-1-4355	40
40-1-4369	43
40-1-4370	37
40-1-4371	41
40-1-4372	42
40-1-4677	36
40-1-4679	40
40-1-4680	41
40-1-4681	42
40-1-4682	41
40-1-4685	44
40-1-4691	39
40-1-4769	43
40-1-4770	44
40-1-4771	38
40-1-4772	39
40-1-4773	40
40-1-4774	43
40-1-4843	60
41-1-3520	39, 542
41-1-3521	39, 542
41-1-3522	40, 542
41-1-3523	41, 543
41-1-3529	35, 541
41-1-3531	40, 542
41-1-3532	38, 542
41-1-3540	39, 542
41-1-3541	40, 542
41-1-3558	43, 543
41-1-3559	36, 541
41-1-3560	37, 541
41-1-3561	43, 543
42-1-3300	37, 391
42-1-3301	39, 390
42-1-3302	41, 392
42-1-3304	43, 394
42-1-3569	43, 394
42-1-3580	37, 391
42-1-3664	35, 391
42-1-3665	39, 390
42-1-3767	36, 391
42-1-3770	39, 390
42-1-3859	42, 393
42-1-3909	37, 391
42-1-3910	36, 391
42-1-3918	40, 392
42-1-3948	37, 391
42-1-3949	36, 391
42-1-3950	37, 391
42-1-4000	37, 391
42-1-4001	39, 390
42-1-4002	41, 392
42-1-4082	37, 391
42-1-4083	39, 390
42-1-4085	41, 392
42-1-4086	41, 392
42-1-4089	37, 391
42-1-4089 UK	48, 397
42-1-4094	42, 393
42-1-4094 UK	48, 397
42-1-4095	44, 394
42-1-4095 UK	48, 397
42-1-4096	36, 391
42-1-4096 UK	48, 397
42-1-4097	42, 393
42-1-4097 UK	48, 397
42-1-4195	35, 391
42-1-4196	36, 391
42-1-4197	37, 391
42-1-4199	39, 390
42-1-4201	41, 392
42-1-4219	40, 392
42-1-4219 UK	48, 397
42-1-4220	41, 392
42-1-4220 UK	48, 397
42-1-4221	42, 393
42-1-4221 UK	48, 397
42-1-4257	39, 390
42-1-4258	40, 392
42-1-4259	40, 392
42-1-4346	38, 390
42-1-4346 UK	48, 397
42-1-4347	39, 390
42-1-4347 UK	48, 397
42-1-4348	40, 392
42-1-4348 UK	48, 397
42-1-4349	39, 390
42-1-4350	39, 390
42-1-4352	40, 392
42-1-4353	40, 392
42-1-4354	40, 392
42-1-4458	43, 394
42-1-4459	43, 394
42-1-4460	38, 390
42-1-4461	39, 390
42-1-4462	40, 392
42-1-4463	43, 394
42-1-4546	36, 391
42-1-4547	43, 394
42-1-4548	43, 394
42-1-4612	60, 414
42-7-4610	45, 395
44-7-3000	46, 165
44-7-3001	46, 165
44-7-3002	46, 165
44-7-3003	46, 165
44-7-3004	46, 165
44-7-3005	46, 165
44-7-3006	46, 165
44-7-3007	46, 165
44-7-3008	46, 165
44-7-3009	46, 165
44-7-3010	46, 165
44-7-3011	46, 165
50-1-3308	205
50-1-3309	176
50-1-3312	171
50-1-3313	207
50-1-3525	175
50-1-3526	175
50-1-3556	178
50-1-3564	178
50-1-3580	167
50-1-3581	167
50-1-3582	167
50-1-3648	169
50-1-3916	169
50-1-3917	169
50-1-3918	169
50-1-3919	169
50-1-3920	169
50-1-3921	169
50-1-3944	142
50-1-3991	133
50-1-3992	133
50-1-3993	133
50-1-3994	133
50-1-3995	133
50-1-3996	133
50-1-3997	133
50-1-3998	133
50-1-3999	133
50-1-4000	133
50-1-4001	134
50-1-4002	134
50-1-4003	134
50-1-4004	134
50-1-4005	134
50-1-4060	141
50-1-4061	141
50-1-4174	178
50-7-3339	207
50-7-3343	207
50-7-3347	167
50-7-3348	167
50-7-3349	167
50-7-3350	167
50-7-3549	177
50-7-3550	177
50-7-3551	177
50-7-3552	178
50-7-3553	178
50-7-3554	178
50-7-3557	177
50-7-3560	178
50-7-3583	168
50-7-3584	168
50-7-3617	177
50-7-3618	177
50-7-3736	206
50-7-3737	206
50-7-3880	206
50-7-4273	172
50-7-4274	172
50-7-4275	173
50-7-4276	173
50-7-4277	174
50-7-4285	144
52-1-3553	142, 448
52-1-3571	175, 459
52-1-3592	175, 459
52-1-3593	142, 448
52-1-3605	204, 471
52-1-3606	204, 471
52-1-3607	175, 459
52-1-3608	167, 455
52-1-3609	168, 456
52-1-3610	167, 455
52-1-3611	168, 456
52-1-3612	167, 455
52-1-3613	168, 456
52-1-3614	168, 455
52-1-3615	169, 456
52-1-3616	168, 455
52-1-3617	169, 456
52-1-3679	169, 457
52-1-3694	169, 457
52-1-3695	169, 457
52-1-3709	168, 456
52-1-3710	170, 457
52-1-3769	205, 472
52-1-3771	133, 442
52-1-3772	133, 442
52-1-3773	133, 442
52-1-3774	133, 442
52-1-3775	133, 442
52-1-3776	133, 442
52-1-3777	133, 442
52-1-3778	133, 442
52-1-3779	133, 442
52-1-3780	133, 442
52-1-3781	134, 442
52-1-3782	134, 442
52-1-3783	134, 442
52-1-3784	134, 442
52-1-3785	134, 442
52-1-3790	171, 458
52-1-3840	126, 439
52-1-3861	170, 457
52-1-3862	170, 457
52-1-3863	170, 457
52-1-3864	169, 457
52-1-3865	169, 457
52-1-3866	169, 457
52-1-3867	170, 458
52-1-3868	170, 458
52-1-3869	169, 457
52-1-3870	169, 457
52-1-3871	169, 457
52-1-3872	168, 456
52-1-3873	168, 456
52-1-3874	170, 457
52-1-3875	170, 457
52-1-3877	204, 471
52-1-3898	193, 465

Index

Part number	Pages
52-1-3944	192
	464
52-1-3945	191
	463
52-1-3947	191
	463
52-1-3948	192
	464
52-1-3949	192
	464
52-1-3950	192
	464
52-1-3953	195
	467
52-1-3954	194
	466
52-1-3957	194
	466
52-1-3964	193
	465
52-1-3990	177
	460
52-1-4009	176
	460
52-1-4013	205
	472
52-1-4038	166
	454
52-1-4040	220
	475
52-1-4051	176
	460
52-1-4107	168
	455
52-1-4108	169
	456
52-1-4109	170
	458
52-1-4110	168
	455
52-1-4111	169
	456
52-1-4112	170
	458
52-1-4135	126
	439
52-1-4139	138
	445
52-1-4140	139
	446
52-1-4141	138
	445
52-1-4142	139
	446
52-1-4143	140
	447
52-1-4144	140
	447
52-7-3960	121
	438
52-7-4126	143
	448
52-7-4127	143
	449
52-7-4128	144
	449
52-7-4129	144
	450
52-7-4130	145
	450
52-7-4131	145
	451
52-7-4132	146
	451
52-7-4133	147
	452
52-7-4136	111
	431

Part number	Pages
54-1-3029	157
54-1-3030	157
54-1-3031	157
54-1-3032	157
54-1-3033	158
54-1-3034	158
54-1-3552	77
54-1-3553	77
54-1-3554	77
54-1-3555	159
54-1-3556	160
54-1-3557	160
54-1-3558	159
54-1-3559	160
54-1-3560	160
54-1-3561	159
54-1-3562	160
54-1-3563	160
54-1-3564	155
54-1-3565	155
54-1-3566	155
54-1-3567	155
54-1-3568	155
54-1-3569	156
54-1-3570	156
54-1-3571	156
54-1-3572	156
54-1-3573	156
54-1-3574	156
54-1-3575	156
54-1-3576	156
54-1-3600	153
54-1-3601	153
54-1-3602	153
54-1-3603	153
54-1-3604	153
54-1-3605	154
54-1-3606	154
54-1-9000	158
54-7-3000	163
54-7-3002	163
54-7-3003	163
54-7-3005	163
54-7-3006	163
54-7-3008	163
54-7-3009	164
54-7-3011	164
54-7-3012	164
54-7-3014	164
54-7-3015	164
54-7-3017	164
54-7-3023	161
54-7-3027	161
54-7-3028	161
54-7-3509	121
54-7-3510	121
54-7-3543	106
54-7-3544	106
54-7-3545	128
54-7-3547	119
54-7-3548	119
54-7-3549	127
54-7-3550	127
60-1-3303	200
60-1-3323	200
60-1-3325	200
60-1-3327	201
60-1-3329	201
60-1-3331	197
60-1-3332	197
60-1-3342	197
60-1-3523	199
60-1-3525	201
60-1-3620	201
60-1-3760	51
60-1-3761	51
60-1-3762	51
60-1-3763	51

Part number	Pages
60-1-3778	51
60-1-3779	51
60-1-3918	52
60-1-4007	54
62-1-3300	198
	467
62-1-3301	198
	468
62-1-3570	51
	398
62-1-3571	51
	398
62-1-3572	51
	398
62-1-3573	51
	398
62-1-3584	51
	398
62-1-3585	51
	398
62-1-3625	202
	469
62-1-3628	201
	468
62-1-3637	202
	469
62-1-3711	109
	429
62-1-3713	110
	430
62-1-3719	109
	429
62-1-3720	110
	430
62-1-3732	110
	430
62-1-3733	110
	430
62-1-3747	109
	429
62-1-3748	109
	429
62-1-4008	54
	401
62-1-9000	52
	399
62-1-9001	52
	399
62-1-9002	52
	399
63-1-3300	199
63-1-3301	197
70-1-3520	67
70-1-3557	70
70-1-3625	67
	408
70-1-3626	65
70-1-3627	64
70-1-3628	64
70-1-3639	68
70-1-3640	68
	409
70-1-3645	71
70-1-3646	71
70-1-3647	69
70-1-3648	69
	410
70-1-3654	65
	407
70-1-3655	64
	406
70-1-3656	64
	406
70-1-3657	66
70-1-9000	72
	411
70-1-9001	72
70-1-9002	72

Part number	Pages
	411
70-1-9003	72
70-7-3539	56
70-7-3540	56
70-7-3541	56
70-7-3542	56
70-7-3543	56
70-7-3544	56
	402
70-7-3621	115
	434
70-7-3622	114
	433
70-7-3623	55
	401
70-7-3635	58
70-7-3636	118
	437
70-7-3637	118
	437
70-7-3638	119
	438
70-7-3658	55
	402
70-7-3659	219
70-7-3660	57
70-7-3661	118
	437
71-1-3303	95
71-1-3304	94
	423
71-1-3305	93
71-1-3309	94
71-1-3519	92
71-1-3522	95
	424
71-1-3553	92
	421
71-1-3560	93
	421
71-1-3578	94
	423
71-1-3579	92
71-1-3580	95
71-1-3581	95
	423
71-1-3582	93
	422
71-1-3583	94
	422
71-1-3586	92
	421
71-1-3611	70
71-1-3617	92
71-1-3618	95
71-1-3619	92
71-1-3622	96
	425
71-1-3649	96
	424
71-1-3787	89
	418
71-1-3788	90
	419
71-1-3789	91
	420
71-1-3790	89
	418
71-1-3791	90
	419
71-1-3792	91
	91
	420
	420
71-1-3793	89
	418
71-1-3794	90
	419

Part number	Pages
71-1-3795	91
	420
71-1-3796	89
	418
71-1-3797	90
	419
71-1-3798	91
	420
71-1-3799	89
71-1-3800	90
71-1-3801	91
71-1-3802	89
71-1-3803	90
71-1-3804	91
71-1-3805	89
71-1-3806	90
71-1-3807	91
71-1-3808	89
71-1-3809	90
71-1-3810	91
71-1-3812	54
71-1-3835	95
	423
71-1-3851	88
71-1-3856	92
	550
71-1-3857	92
	550
71-1-3860	89
	551
71-1-3861	89
	551
71-1-3862	89
	551
71-1-3863	89
	551
71-1-3867	54
	400
71-1-3879	89
	418
71-1-3880	89
	418
71-1-3881	90
	419
71-1-3882	91
	420
71-1-3885	89
71-1-3886	89
71-1-3887	89
	551
71-1-3888	89
	551
71-1-3889	90
	419
71-1-3890	90
71-1-3891	90
71-1-3893	91
71-1-3894	91
71-1-3912	87
	417
71-1-3913	87
	417
71-1-3914	87
	417
71-1-3915	87
	417
71-7-3910	99
	426
71-7-3911	99
	426
72-1-3316	34
	540
72-1-3346	129
72-1-3348	129
72-1-3349	129
72-1-3351	129
72-1-3352	129
72-1-3354	129

Part number	Pages
72-1-3380	129
72-1-3381	129
72-1-3383	129
72-1-3384	129
72-1-3386	129
72-1-3410	130
72-1-3412	130
72-1-3413	130
72-1-3414	130
72-1-3416	130
72-1-3417	130
72-1-3420	130
72-1-3566	213
72-1-3635	183
	562
72-1-3636	183
	562
72-1-3637	183
	562
72-1-3638	183
	562
72-1-3733	212
72-1-3856	213
72-1-3857	212
72-1-3858	212
72-1-3990	129
	440
72-1-3991	130
	441
72-1-3992	129
	440
72-1-3993	129
	440
72-1-4136	108
	554
72-1-4137	108
	554
72-1-4145	108
	554
72-1-4146	108
	554
72-1-4147	108
	554
72-1-4148	108
	554
72-1-4160	108
	554
72-1-4186	129
	440
72-1-4187	129
	440
72-1-4197	120
	556
72-1-4198	120
	556
72-1-4206	210
72-1-4207	210
72-1-4212	182
	561
72-1-4213	182
	561
72-1-4214	182
	561
72-1-4215	182
	561
72-1-4218	82
	548
72-1-4219	82
	548
72-1-4220	81
	547
72-1-4221	81
	547
72-1-4222	83
	549
72-1-4223	83
	549
72-1-4225	120

Part number	Pages
	556
72-1-4231	84
	550
72-1-4232	84
	550
72-1-4233	120
	556
72-1-4235	120
	556
72-1-4236	120
	556
72-1-4241	182
	561
72-1-4242	182
	561
72-1-4243	33
	539
72-1-4244	33
	539
72-1-4245	33
	539
72-1-4246	33
	539
72-1-4247	33
	539
72-1-4248	33
	539
72-1-4256	78
	545
72-1-4257	78
	545
72-1-4258	84
	550
72-1-4259	84
	550
72-1-4260	83
	549
72-1-4261	83
	549
72-1-4272	82
	548
72-1-4273	82
	548
72-1-4275	78
	545
72-1-4276	78
	545
72-1-4279	130
	441
72-1-4286	81
	547
72-1-4287	81
	547
72-1-4288	130
	441
72-1-4289	130
72-1-4290	130
	441
72-1-4292	81
	547
72-1-4293	81
	547
72-1-4294	82
	548
72-1-4295	82
	548
72-1-4296	83
	549
72-1-4297	83
	549
72-1-4298	179
	558
72-1-4299	179
	558
72-1-4300	179
	558
72-1-4301	180
	559
72-1-4302	180
	559
72-1-4309	79
	545
72-1-4310	79
	545
72-1-4314	79
	546
72-1-4315	79
	546
72-1-4316	80
	546
72-1-4317	80
	546
72-1-4318	78
	545
72-1-4319	78
	545
72-1-4320	83
	549
72-1-4321	83
	549
72-1-4322	82
	548
72-1-4323	81
	547
72-1-4324	81
	547
72-1-4325	82
	548
72-1-4326	82
	548
72-1-4327	83
	549
72-1-4328	83
	549
72-1-4331	84
	550
72-1-4332	84
	550
72-1-4333	78
	545
72-1-4334	78
	545
72-1-4335	82
	548
72-1-4336	81
	547
72-1-4337	81
	547
72-1-4338	33
	539
72-1-4339	33
	539
72-1-4340	33
	539
72-1-4341	33
	539
72-1-4342	33
	539
72-1-4343	33
	539
72-1-4344	33
	539
72-1-4345	33
	539
72-1-4346	33
	539
72-1-4347	33
	539
72-1-4348	33
	539
72-1-4349	33
	539
72-1-4350	179
	558
72-1-4351	179
	558
72-1-4352	179
	558
72-1-4353	179
	558
72-1-4354	179
	558
72-1-4355	179
	558
72-1-4356	179
	558
72-1-4357	179
	558
72-1-4358	179
	558
72-1-4359	179
	558
72-1-4360	179
	558
72-1-4361	179
	558
72-1-4362	108
	554
72-1-4363	108
	554
72-1-4364	108
	554
72-1-4365	108
	554
72-1-4366	81
	547
72-1-4367	81
	547
72-1-4368	81
	547
72-1-4369	81
	547
72-1-4370	81
	547
72-1-4371	81
	547
72-1-4372	81
	547
72-1-4373	81
	547
72-1-4374	82
	548
72-1-4375	82
	548
72-1-4376	82
	548
72-1-4377	82
	548
72-1-4378	82
	548
72-1-4379	82
	548
72-1-4380	82
	548
72-1-4381	82
	548
72-1-4382	83
	549
72-1-4383	83
	549
72-1-4384	83
	549
72-1-4385	83
	549
72-1-4386	83
	549
72-1-4387	83
	549
72-1-4388	83
	549
72-1-4389	83
	549
72-1-4396	180
	559
72-1-4397	180
	559
72-1-4398	181
	560
72-1-4399	181
	560
72-1-4400	181
	560
72-1-4401	181
	560
72-1-4409	85
	415
72-1-4410	85
	415
72-1-4411	85
	415
72-1-4412	85
	415
72-1-4413	86
	416
72-1-4414	86
	416
72-1-4416	166
	454
72-1-4417	166
	454
72-1-4418	33
	539
72-1-4419	33
	539
72-1-4420	179
	558
72-1-9000	210
72-1-9001	210
72-1-9002	211
72-1-9003	211
72-1-9004	209
72-1-9005	208
72-1-9006	208
72-1-9007	208
72-1-9011	209
72-7-3329	214
72-7-3330	214
72-7-3331	214
72-7-3332	214
72-7-3659	185
72-7-3663	186
72-7-3664	186
72-7-3665	186
72-7-3668	186
72-7-3671	186
72-7-3723	196
72-7-3725	195
72-7-3726	254
72-7-3819	254
72-7-4250	113
	555
72-7-4251	113
	555
72-7-4254	220
	475
73-1-3504	59
73-1-3520	49
	544
73-1-3521	49
	544
73-1-3522	49
	544
75-1-0003	105
	428
75-1-0004	104
	553
75-1-0006	104
	553
75-1-0007	104
	553
75-1-0008	102
	552
75-1-0009	102
	552
75-7-0010	103
75-7-0011	103
75-7-0012	101
	427
85-7-1030	62
85-7-1321	61
85-7-1331	62
85-7-1333	61
85-7-2331	61
	403
85-7-2332	62
	404
85-7-2334	61
	403
87-7-2201	330
87-7-2203	330
99-1-3558	362
	522
99-7-3691	50

Notes

Notes

Notes

Our custom-made solutions

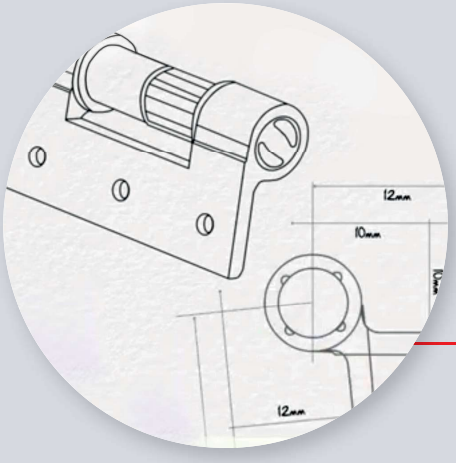

CUSTOM HINGES AND LOCKS

PINET Industrie offers custom hinge and lock designs.
Our Design Offices (6-7 staff) help you to realise solutions that meet specific needs.

For more information, please contact us:
https://www.pinet-industrie.com/en/contact
contact@pinet.eu

NEW LONG HINGE LENGTH CUTTING SITE

PINET Industrie has developed a cutting site for **continuous hinges made to measure and shipped in 72 hours.**

ONLINE PURCHASE | **NO MINIMUM ORDER** | **FAST SHIPPING**

Log on to our dedicated website:
cut2length.pinet-industrie.com/en

PINET®
Hinges and hardware

• Pinet LTD
UK subsidiary
Site web: www.pinet-industrie.com/en
E-mail: contact@pinet.eu

• Pinet Industrie
9 rue de l'étang
PIA Paris Nord 2
BP 62036
95971 Roissy Charles de Gaulle CEDEX
Tél.: +33 (0)1 49 38 27 00
Site web: www.pinet-industrie.com/fr
E-mail: contact@pinet.eu

PINET®
Scharniere und Verschlüsse
für Industrieanwendungen

• Pinet GmbH
German subsidiary
Site web: www.pinet-industrie.com/de
E-mail: contact@pinet.eu

PINET®
La solution charnières et verrouillages

www.pinet-industrie.com/en